US00D902516S

(12) United States Design Patent
McDonnell

(10) Patent No.: US D902,516 S
(45) Date of Patent: ** Nov. 17, 2020

(54) **MOP SUPPORTING STAND**

(71) Applicant: **For Life Products, LLC**, Miramar, FL (US)

(72) Inventor: **Joseph A. McDonnell**, Weston, FL (US)

(73) Assignee: **FOR LIFE PRODUCTS, LLC**, Miramar, FL (US)

(**) Term: **15 Years**

(21) Appl. No.: **29/644,997**

(22) Filed: **Apr. 23, 2018**

(51) **LOC (12) Cl.** **07-05**

(52) **U.S. Cl.**
USPC **D32/52**

(58) **Field of Classification Search**
USPC ... D32/40–43, 45–46, 50–52, 15, 17–18, 22, D32/25, 69–72; D9/527–528, 685; D4/116–118; D19/163, 117, 184
CPC A61B 90/80; A47L 25/00; A47L 5/24–26; A47L 13/20; A47L 13/44; A47L 13/10; A47F 7/00
See application file for complete search history.

(56) **References Cited**

U.S. PATENT DOCUMENTS

69,026 A * 9/1867 Richmond A63D 15/10 211/68
1,208,923 A * 12/1916 Dell A47K 1/09 211/65
1,250,726 A * 12/1917 Mouwerk A47F 7/00 211/13.1
1,450,150 A * 3/1923 Farr A47F 7/00 211/26
2,441,982 A * 5/1948 Turner A47L 13/51 248/688
2,584,219 A * 2/1952 Murrell A47L 13/51 312/207
3,022,895 A * 2/1962 Kingsley A47F 7/00 211/4
3,981,399 A * 9/1976 Crouch B44D 3/123 206/15.2
4,479,584 A * 10/1984 Raz A47K 17/00 211/51

(Continued)

FOREIGN PATENT DOCUMENTS

JP D1146065 * 7/2002

OTHER PUBLICATIONS

Amazon.com: Zirpan Docking Station, reviews 2019, https://www.amazon.com/...tible-Cleaners-Handheld-Organizer/dp/B07RXMQHQL/ref=sr_1_13?keywords=mop+storage+stand&qid=1567527272&s=gateway&sr=8-13#customerReviews, site visited Sep. 3, 2019.*

Primary Examiner — John R Yeh
(74) *Attorney, Agent, or Firm* — Bass, Berry & Sims, PLC

(57) **CLAIM**

The ornamental design for a mop supporting stand, as shown and described.

DESCRIPTION

FIG. **1** is a perspective view of a mop supporting stand showing my new design;
FIG. **2** is a front view thereof;
FIG. **3** is a rear view thereof;
FIG. **4** is a left side view thereof;
FIG. **5** is a right side view thereof;
FIG. **6** is a top plan view thereof;
FIG. **7** is a bottom plan view thereof;
FIG. **8** is a perspective view of the mop supporting stand engaged with a portion of a mop to support the mop in an upright position; and,
FIG. **9** is another perspective view of the mop shown detached from the mop supporting stand.

(Continued)

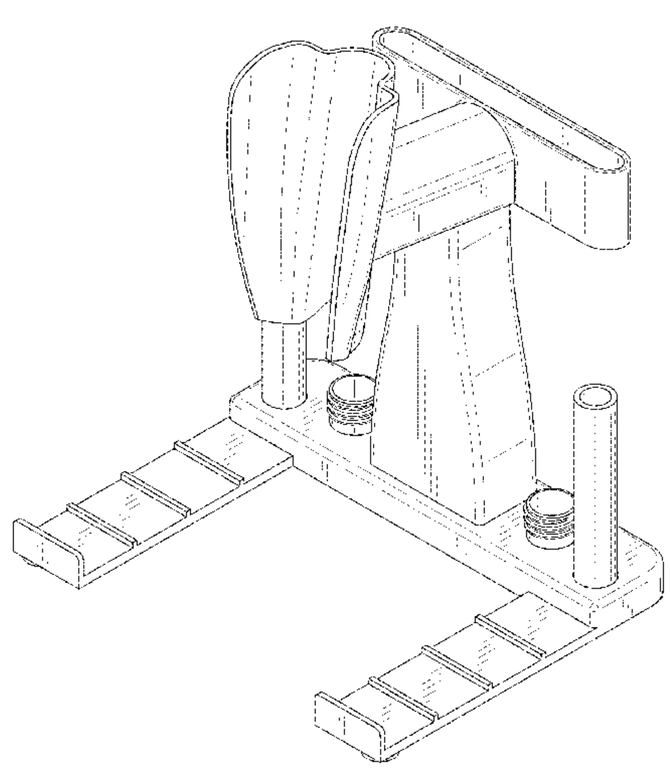

All other broken lines are included for the purpose of illustrating portions of the mop supporting stand, that form no part of the claimed design.

1 Claim, 9 Drawing Sheets

(56) **References Cited**

U.S. PATENT DOCUMENTS

D391,716	S *	3/1998	Lyles, Sr.	D32/51
D393,130	S *	3/1998	Murphy	D32/41
D393,508	S *	4/1998	Rademacher	D32/52
6,629,616	B1 *	10/2003	Heinzle	A47B 47/00 211/85.7
6,651,829	B1 *	11/2003	Prochaska	B25H 3/04 211/65
6,711,845	B2 *	3/2004	Dubois	A47B 81/005 224/912
6,783,013	B1 *	8/2004	Spann	B25H 3/04 211/60.1
7,044,299	B2 *	5/2006	Nagoya	A46B 17/04 206/361
D548,911	S *	8/2007	Main	D32/38
7,775,611	B1 *	8/2010	Solis	A47L 13/51 312/206
8,025,347	B1 *	9/2011	Solis	A47L 13/51 312/206
8,567,616	B2 *	10/2013	Mishan	A47L 13/20 211/70.6
D728,880	S *	5/2015	Mishan	D32/35
9,936,799	B2 *	4/2018	Reyes	A46B 17/02
2005/0051678	A1 *	3/2005	Modesto	A47F 5/0884 248/121
2005/0061695	A1 *	3/2005	Nogin	A47L 13/51 206/362.3
2016/0031074	A1 *	2/2016	Su	B25H 3/04 206/378

* cited by examiner

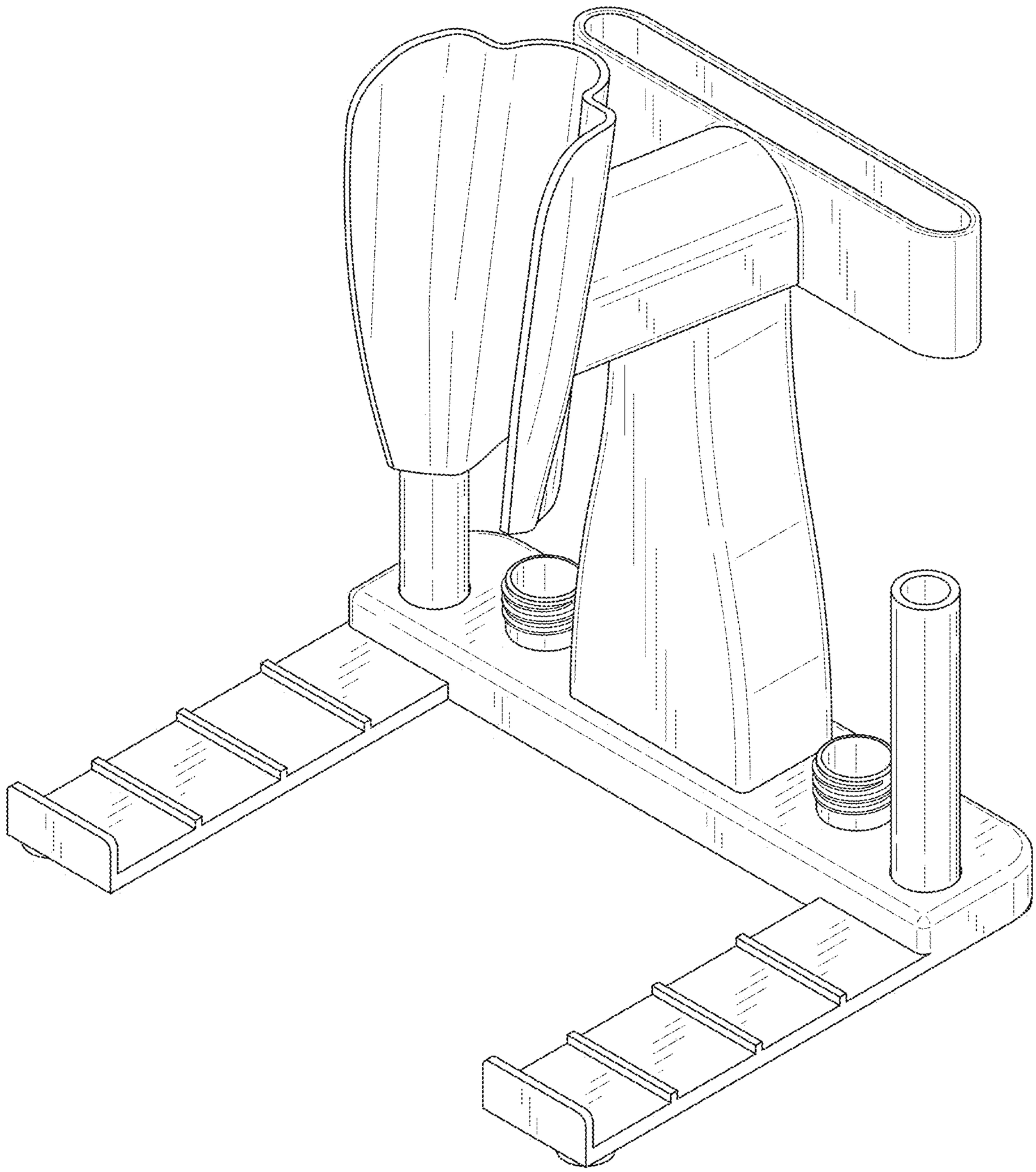

FIG. 1

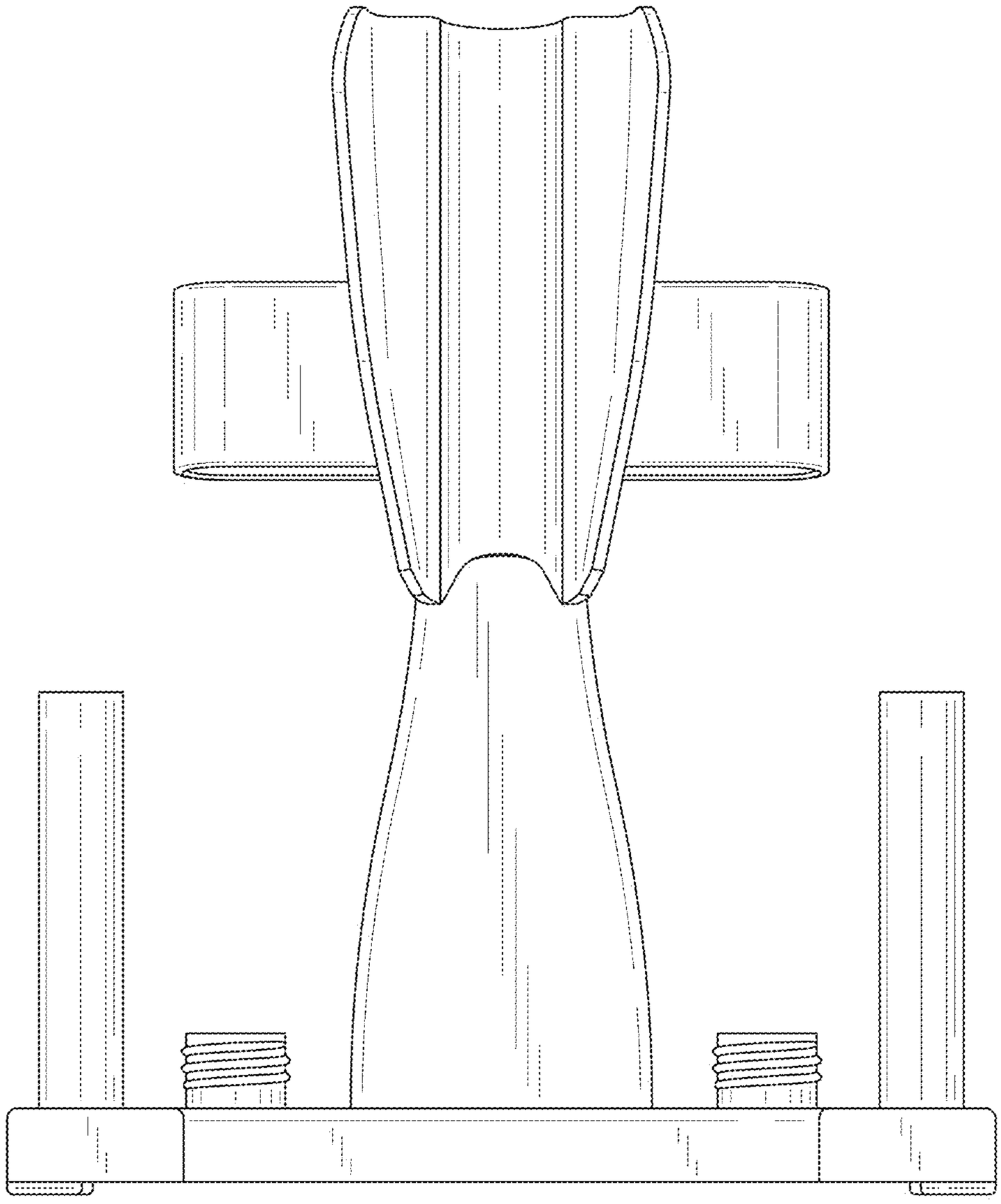

FIG. 2

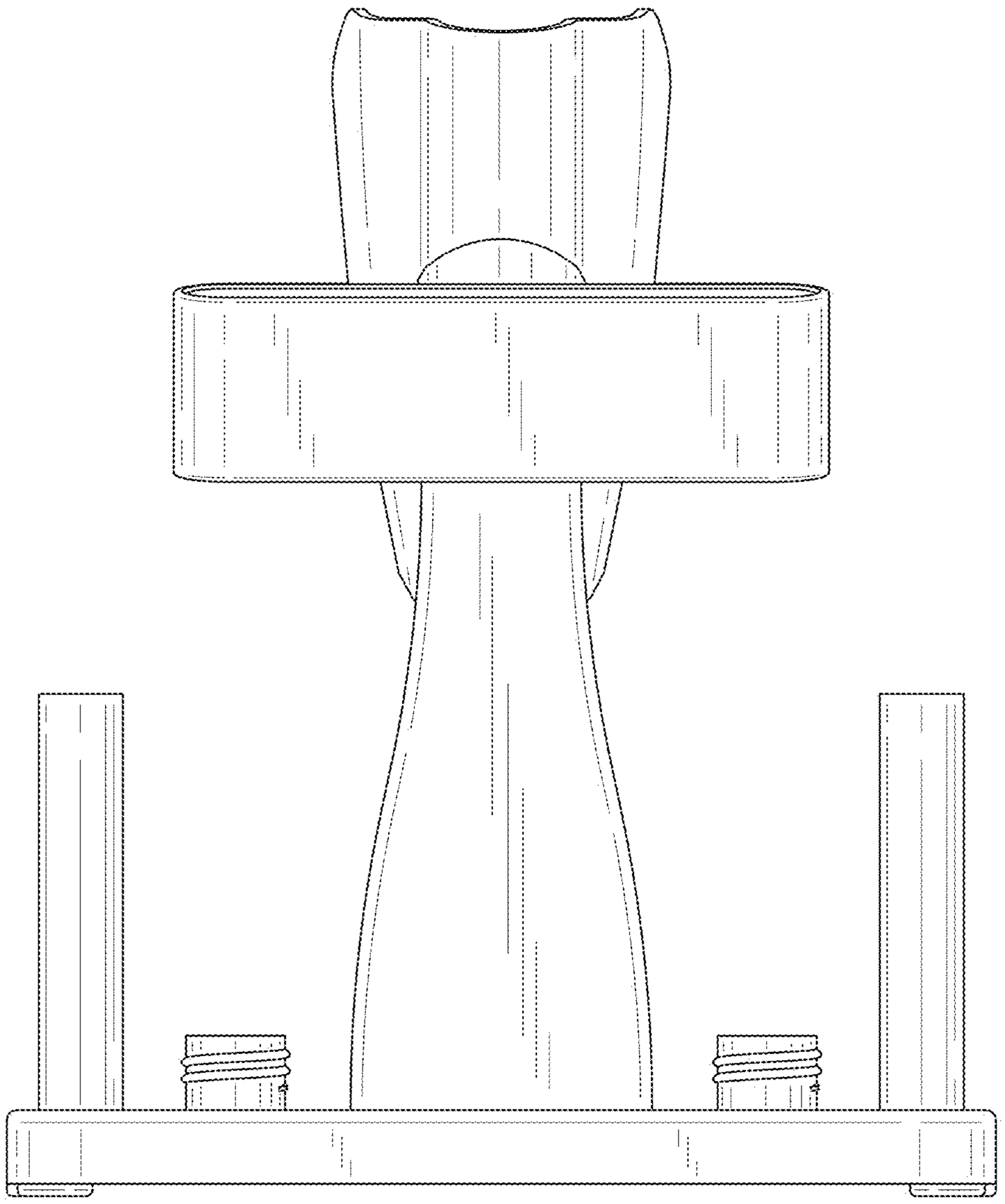

FIG. 3

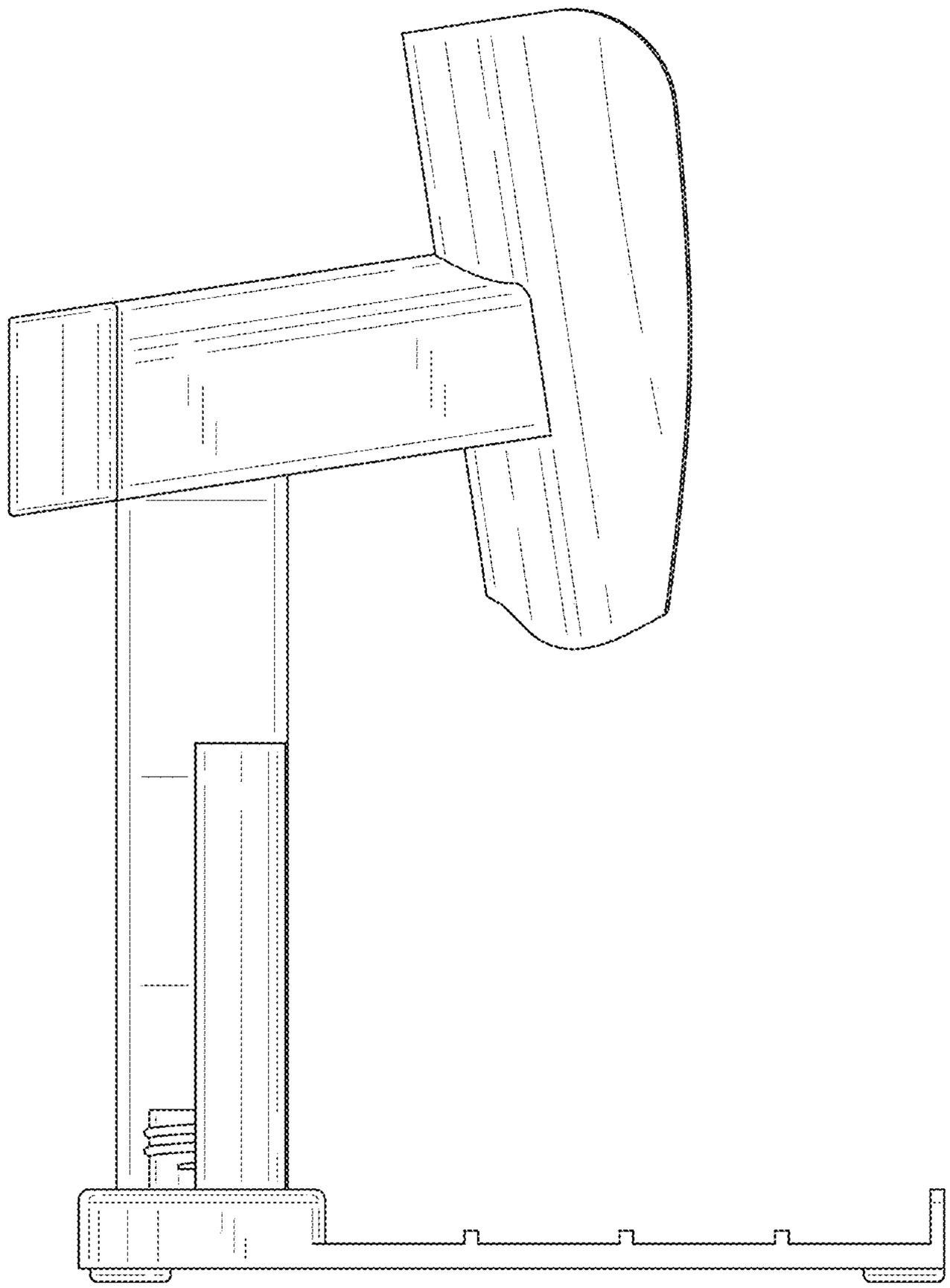

FIG. 4

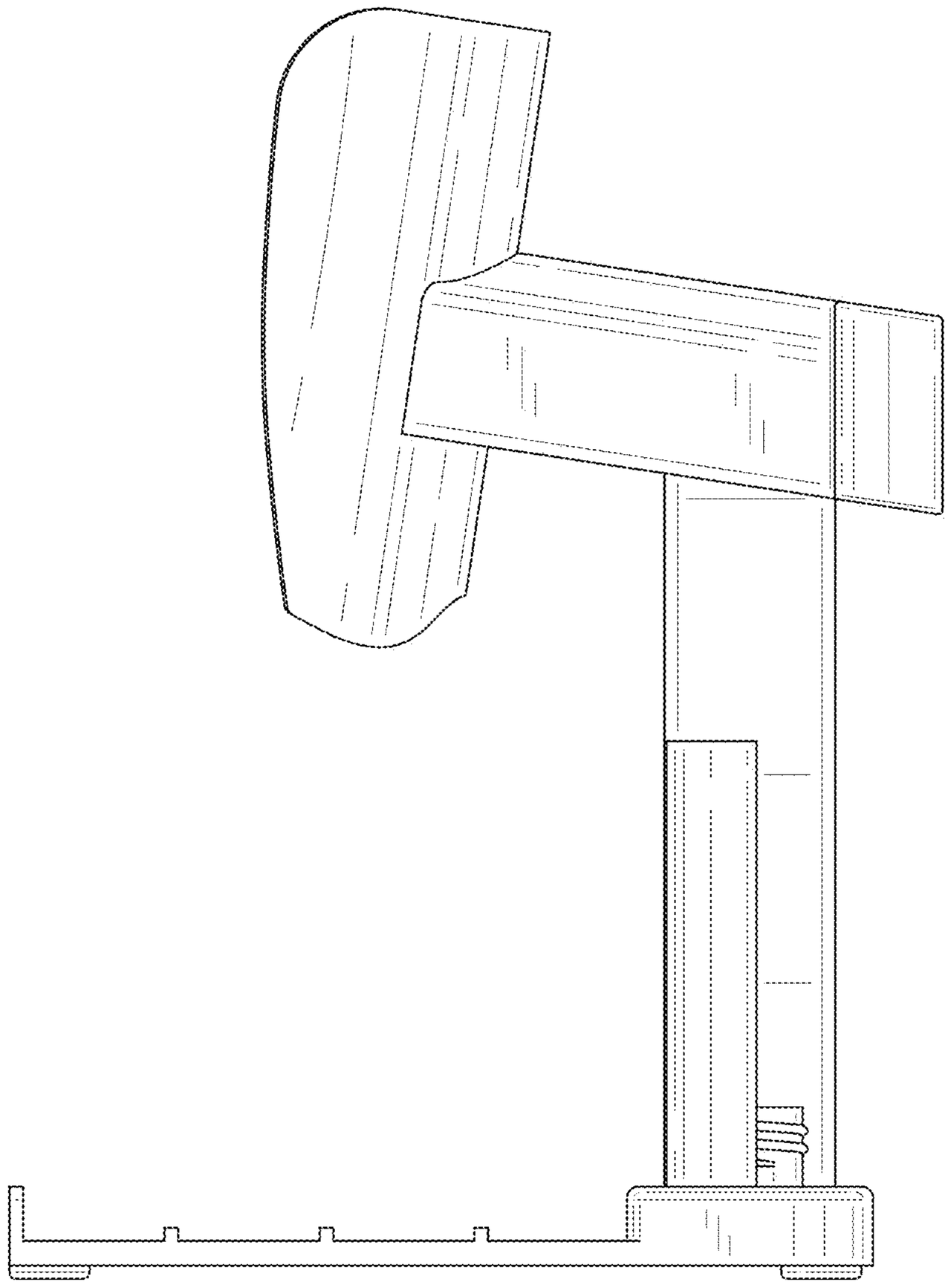

FIG. 5

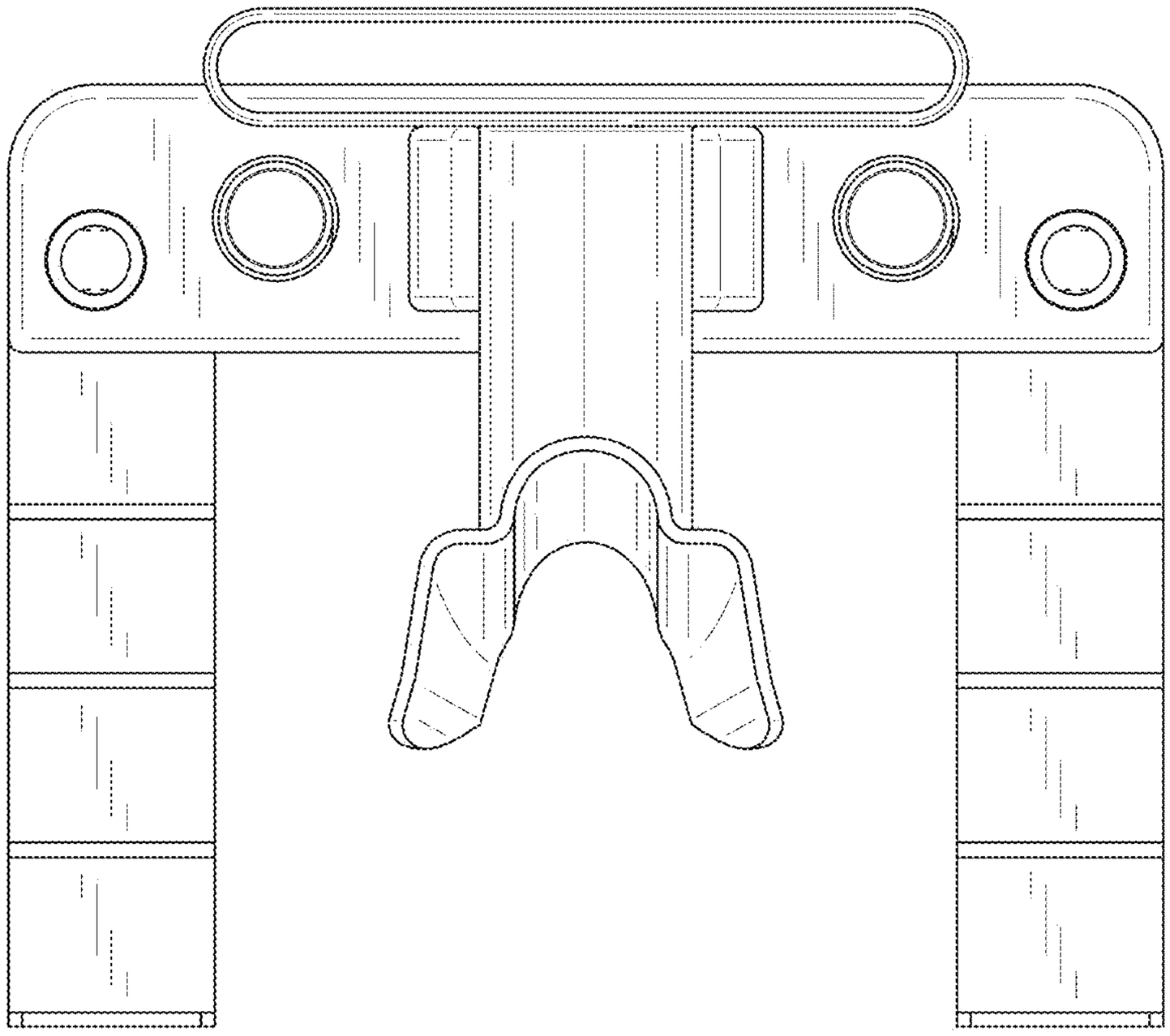

FIG. 6

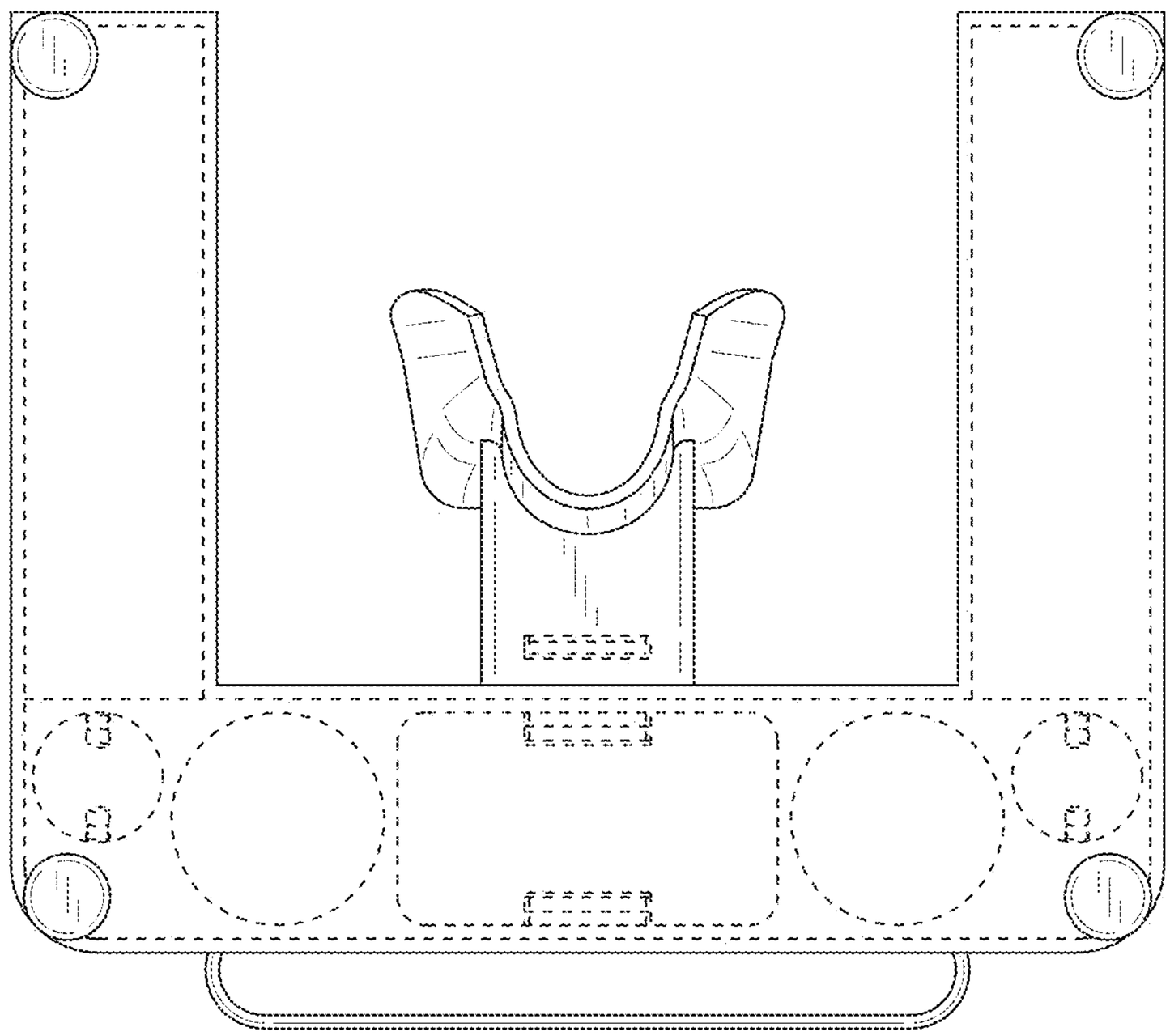

FIG. 7

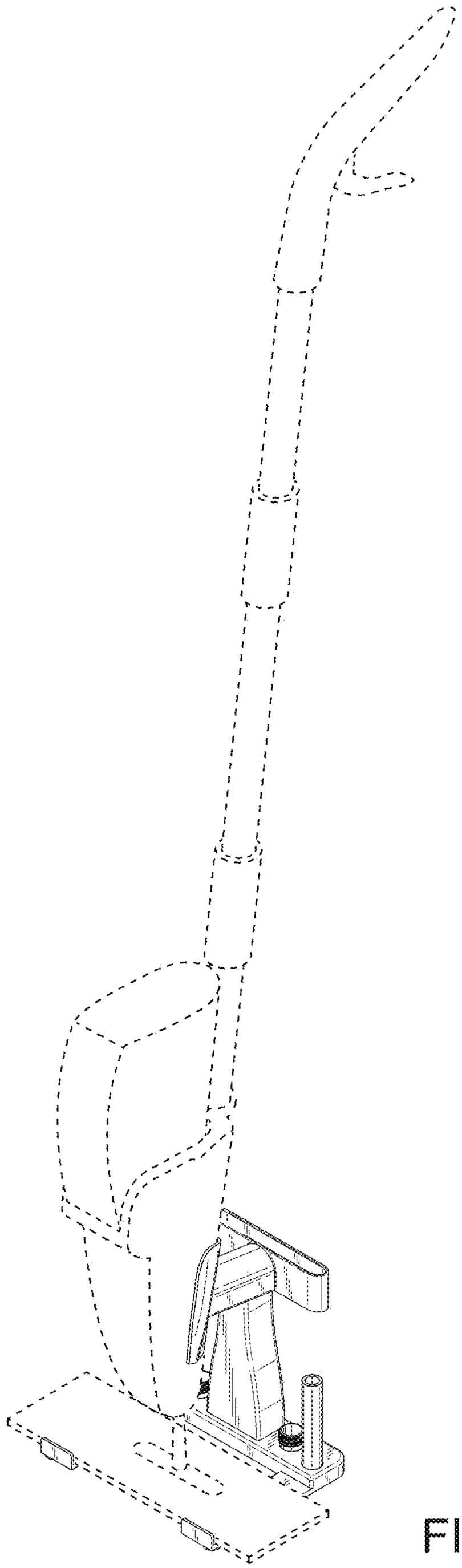

FIG. 8

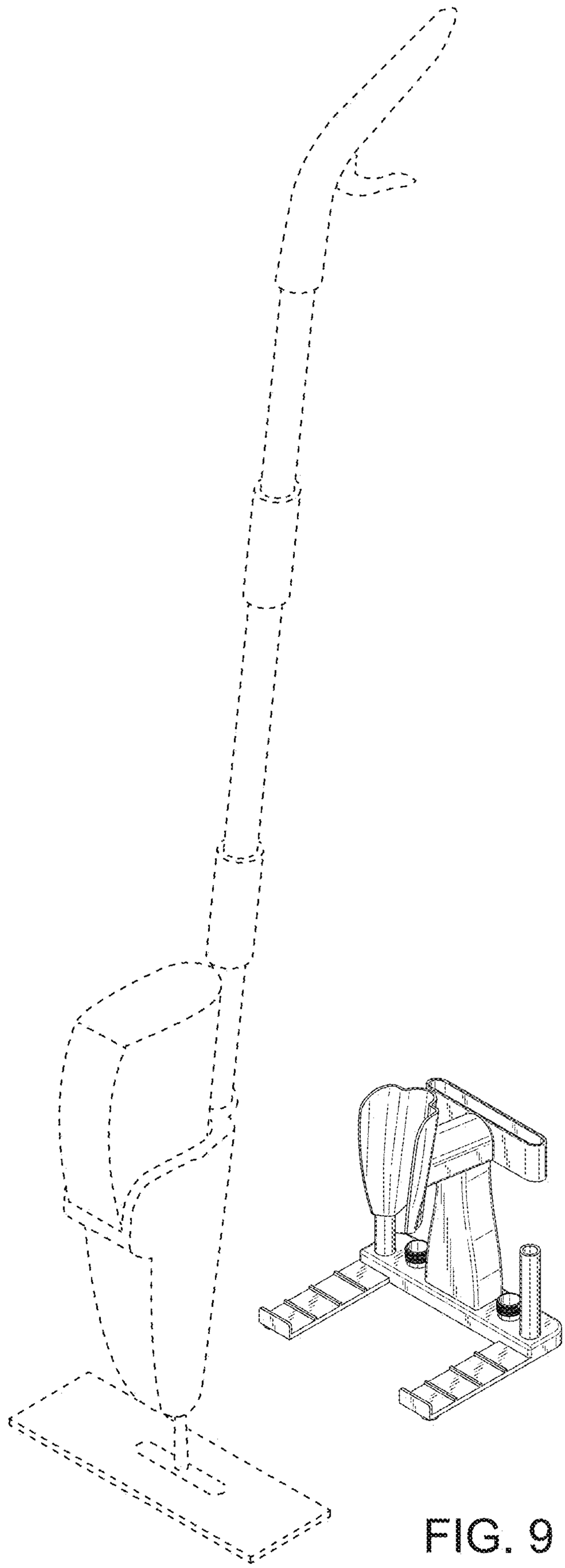

FIG. 9