US00D902446S

(12) United States Design Patent

Thompson et al.

(10) Patent No.: US D902,446 S
(45) Date of Patent: ** Nov. 17, 2020

(54) **KICK OUT FLASHING**

(71) Applicant: **American Flashings and Accessories, LLC**, Grant, MI (US)

(72) Inventors: **Leon W. Thompson**, Kent City, MI (US); **Nathan L. Thompson**, Grant, MI (US); **Jacob M. Thompson**, Grant, MI (US)

(73) Assignee: **American Flashings and Accessories, LLC**, Bailey, MI (US)

(**) Term: **15 Years**

(21) Appl. No.: **29/691,132**

(22) Filed: **May 14, 2019**

Related U.S. Application Data

(63) Continuation of application No. 16/162,938, filed on Oct. 17, 2018, now Pat. No. 10,508,450.

(51) **LOC (12) Cl.** **25-01**

(52) **U.S. Cl.**
USPC **D25/199**

(58) **Field of Classification Search**
USPC D25/48.2, 55, 60, 119, 125, 136, 138, D25/164, 199
CPC E04D 13/02; E04D 13/031; E04D 13/04; E04D 13/0459; E04D 13/0481; E04D 13/064; E04D 13/1407; E04D 13/1475; E04D 13/1478; E04D 13/15; E04D 13/155; E04D 13/158; E04D 2013/0468; E04F 19/064; E04B 1/003; E04B 1/64; E04B 5/00; E06B 1/00; E06B 1/04; E06B 1/34; E06B 1/56; E06B 1/62; E06B 1/68; E06B 2001/628
See application file for complete search history.

(56) **References Cited**

U.S. PATENT DOCUMENTS

3,533,201	A	10/1970	Tyler	
5,109,641	A	5/1992	Halan	
5,333,419	A	8/1994	Hickner	
5,675,939	A	10/1997	Hickner	
D420,274	S *	2/2000	Lappin	D8/354
D448,095	S *	9/2001	Merideth	D25/199
6,401,402	B1	6/2002	Williams	

(Continued)

OTHER PUBLICATIONS

J'D Kickout Flashing Amazon Canada https://www.amazon.ca/JD-Kickout-Flashing-Right-Combo/dp/B07LC1D4FB First Available Jan. 7, 2019 (Year: 2019).*

(Continued)

Primary Examiner — Leanne Was-Englehart
(74) *Attorney, Agent, or Firm* — Warner Norcross + Judd LLP

(57) **CLAIM**

The ornamental design for a kick out flashing, as shown and described.

DESCRIPTION

FIG. **1** is a perspective view of the kick out flashing embodying the new design;
FIG. **2** is a top view thereof;
FIG. **3** is a bottom view thereof;
FIG. **4** is a right side view thereof;
FIG. **5** is a left side view thereof;
FIG. **6** is a front view thereof; and,
FIG. **7** is a rear view thereof.
FIGS. **3** and **7** show features of a kick out flashing in broken lines. The broken lines depict portions of the kick out flashing that form no part of the claimed design. Further, the broken lines immediately adjacent the solid-line portions of the design form the boundary of the design, with the broken lines forming no part of the claimed design.

1 Claim, 4 Drawing Sheets

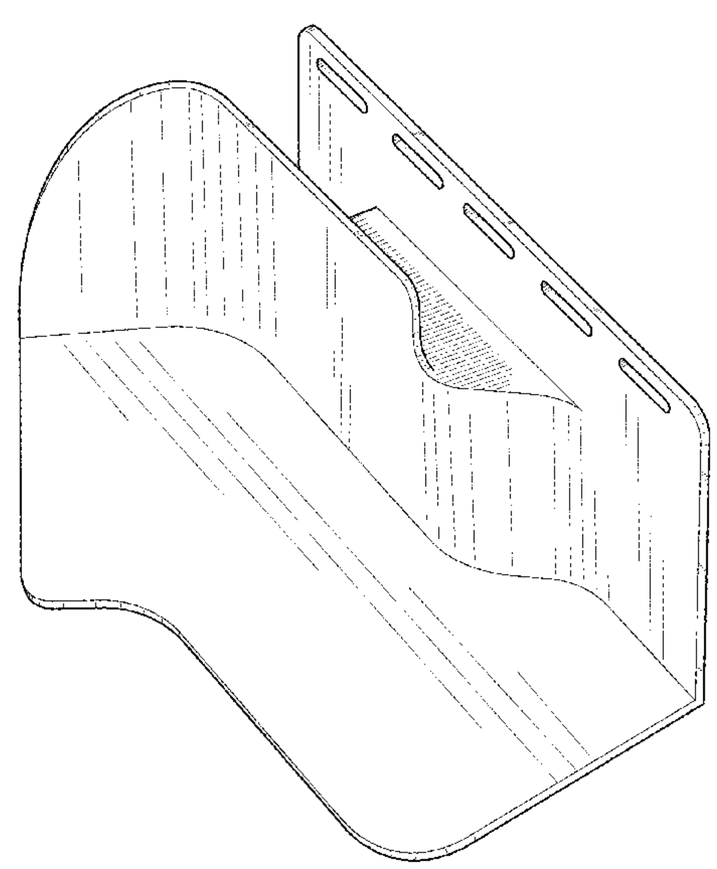

(56) **References Cited**

U.S. PATENT DOCUMENTS

6,481,164	B1	11/2002	McCorkel	
6,681,530	B1	1/2004	Givens	
6,725,617	B2	4/2004	Cox	
7,219,477	B2	5/2007	Leffler	
7,685,779	B1	3/2010	Nelson	
8,161,689	B1 *	4/2012	Butzen	E06B 1/62 52/58
10,508,450	B2 *	12/2019	Thompson	E04D 13/0481
2004/0226225	A1	11/2004	Olk et al.	
2019/0161973	A1 *	5/2019	Thompson	E04D 13/1478

OTHER PUBLICATIONS

Kick Out Flashing YouTube https://www.youtube.com/watch?v=0xu6i3pocz4&feature=emb_logo Posted Dec. 10, 2019 (Year: 2019).*

* cited by examiner

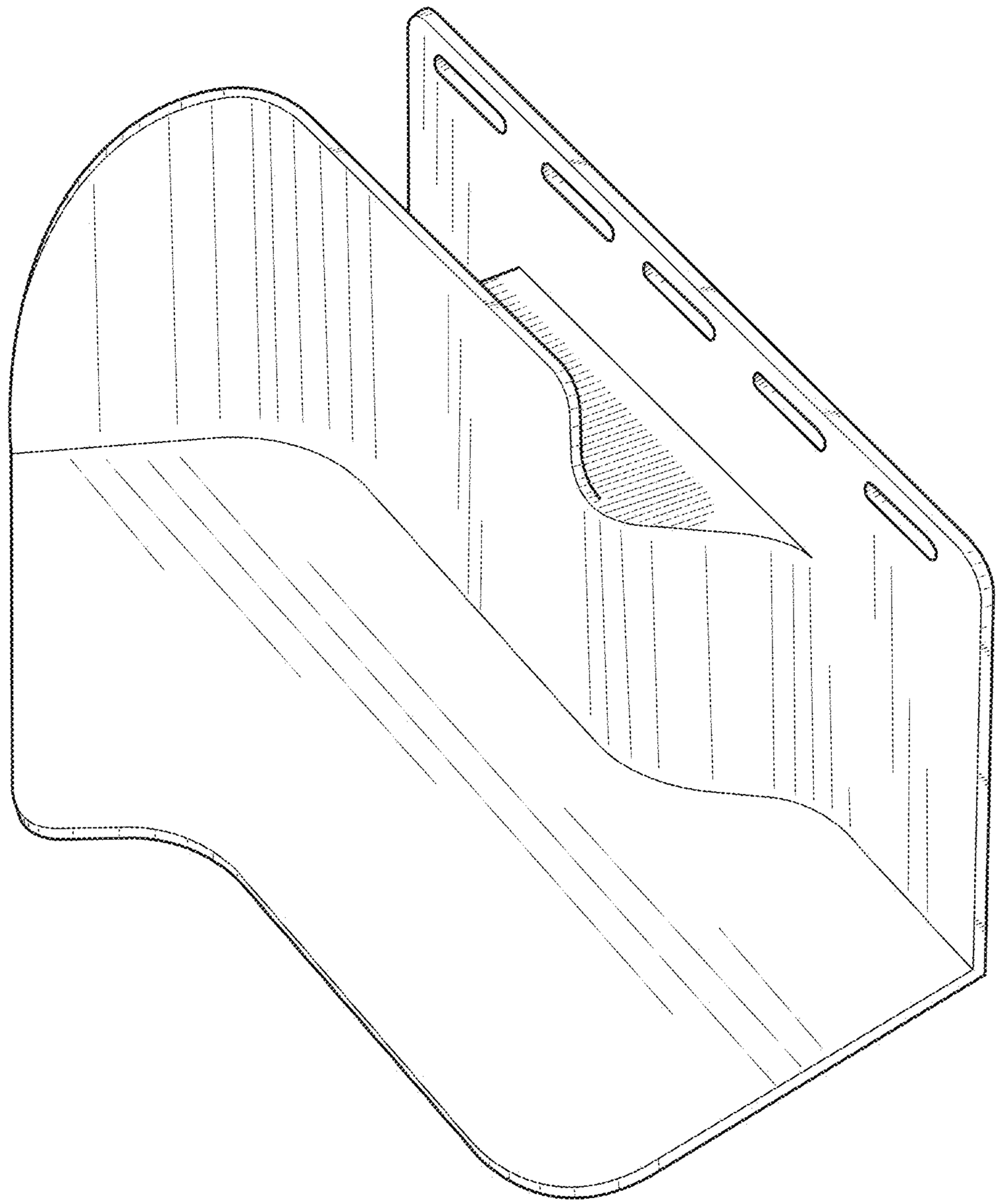

Fig. 1

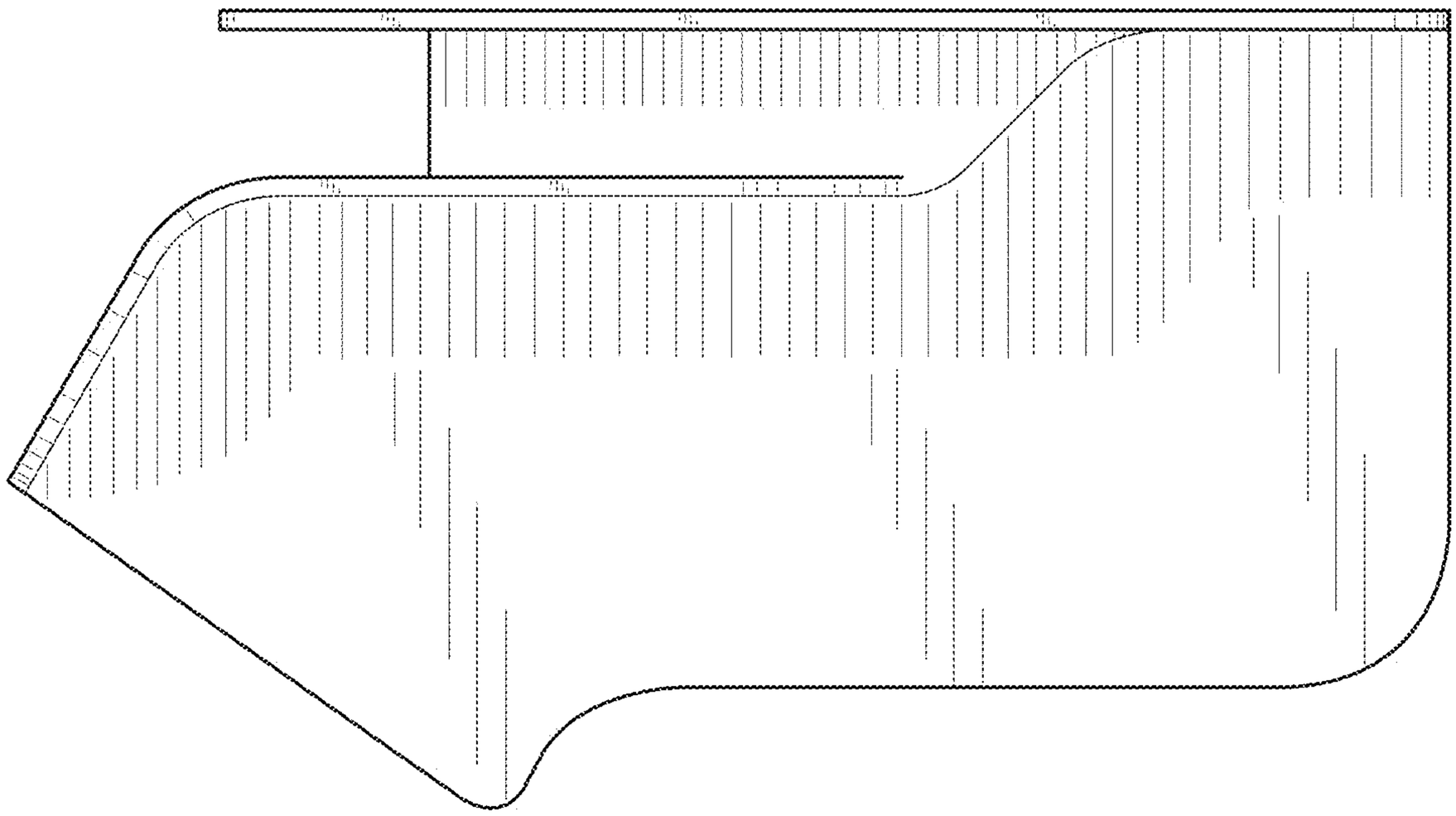

Fig. 2

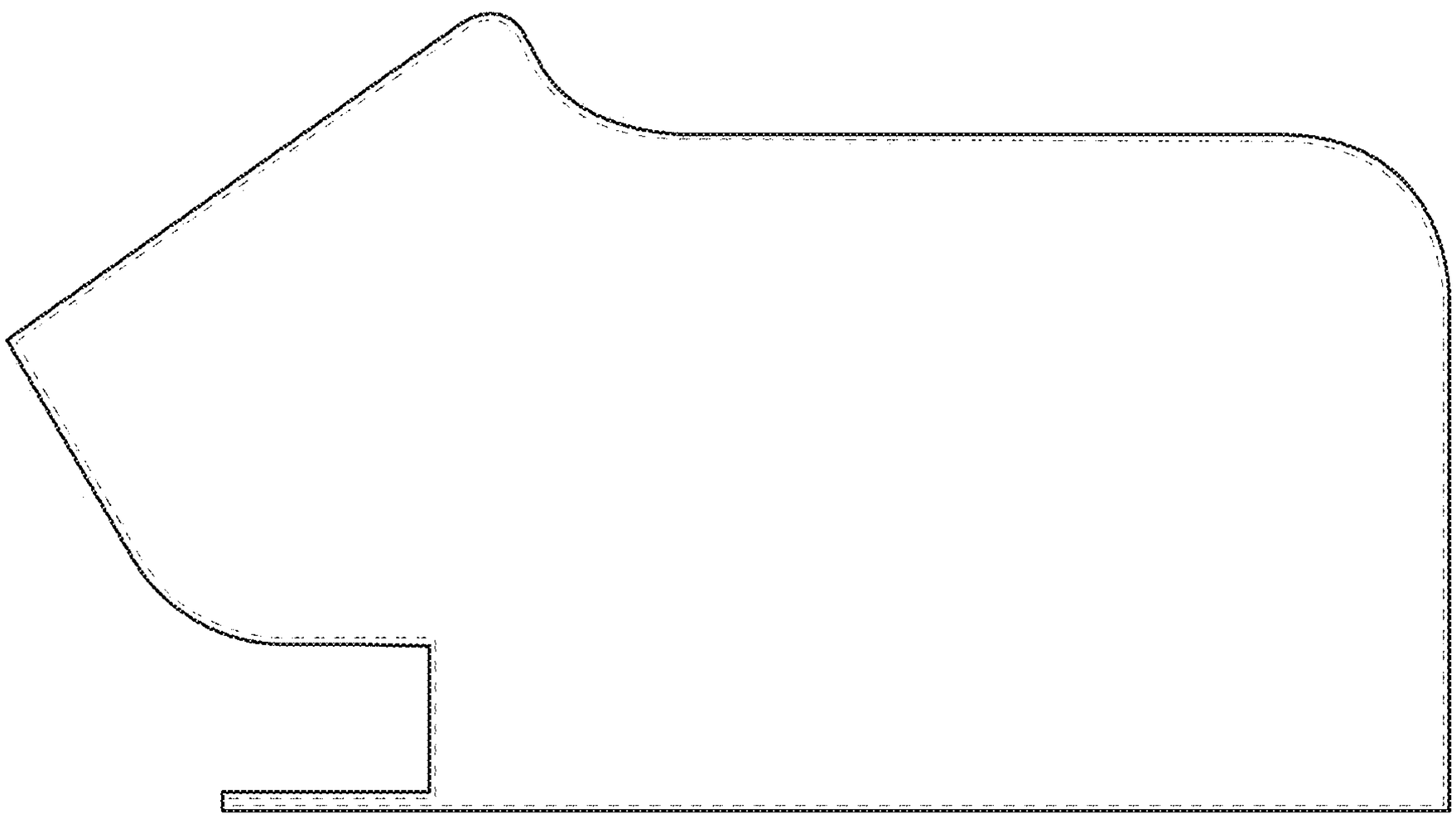

Fig. 3

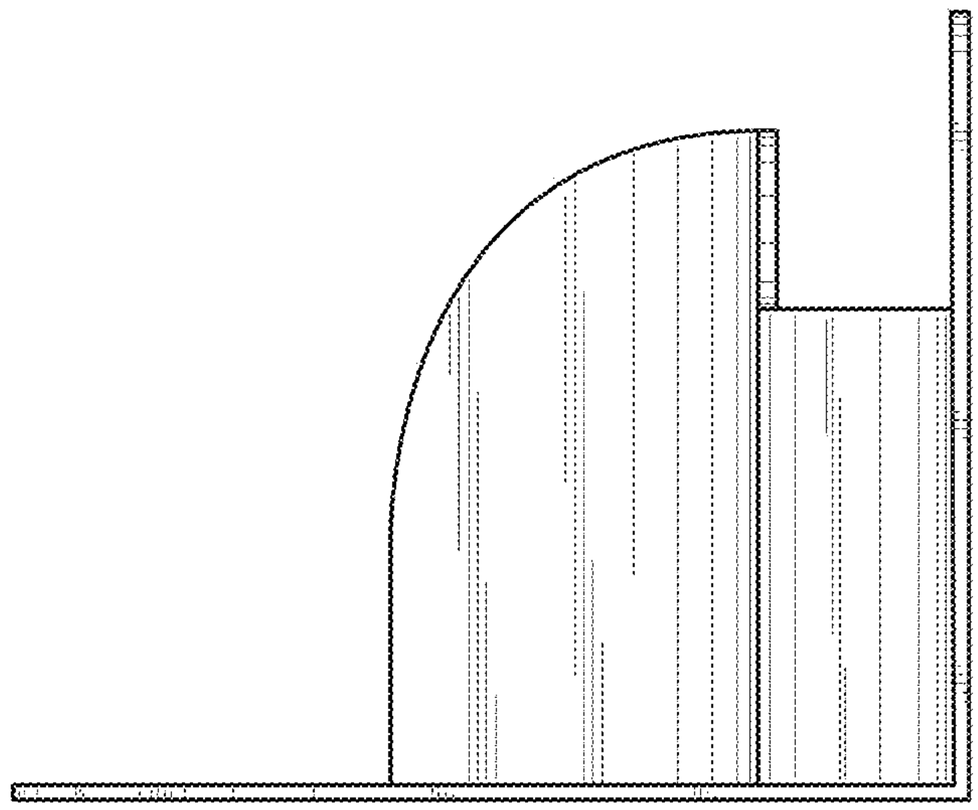

Fig. 4

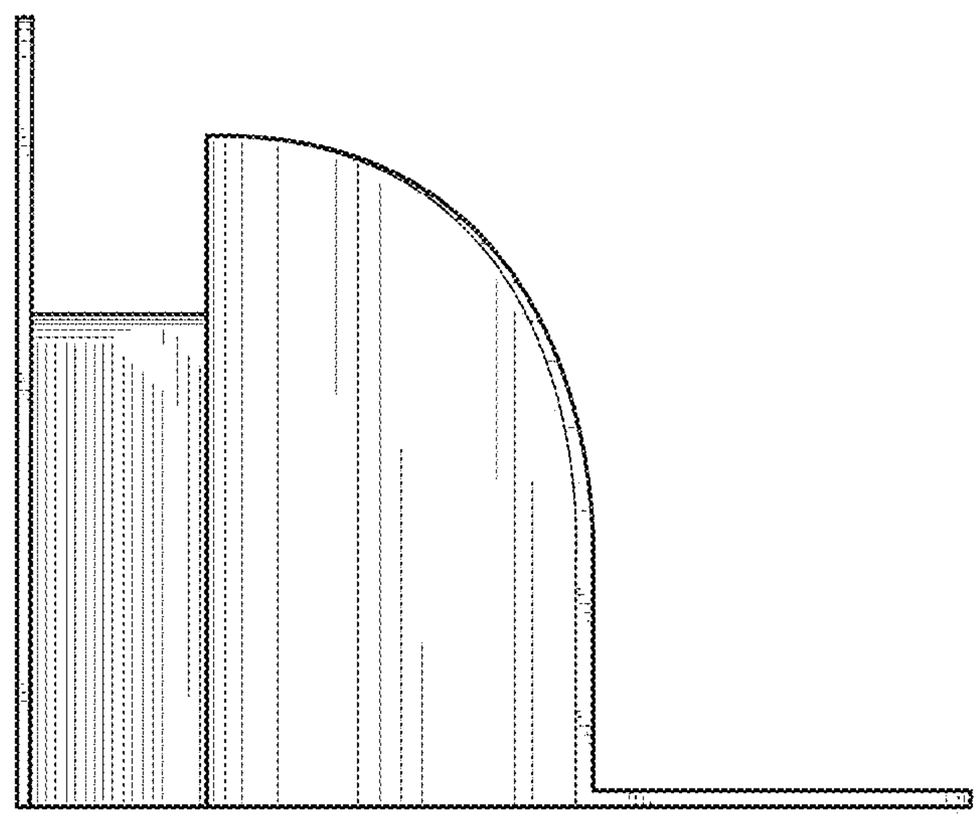

Fig. 5

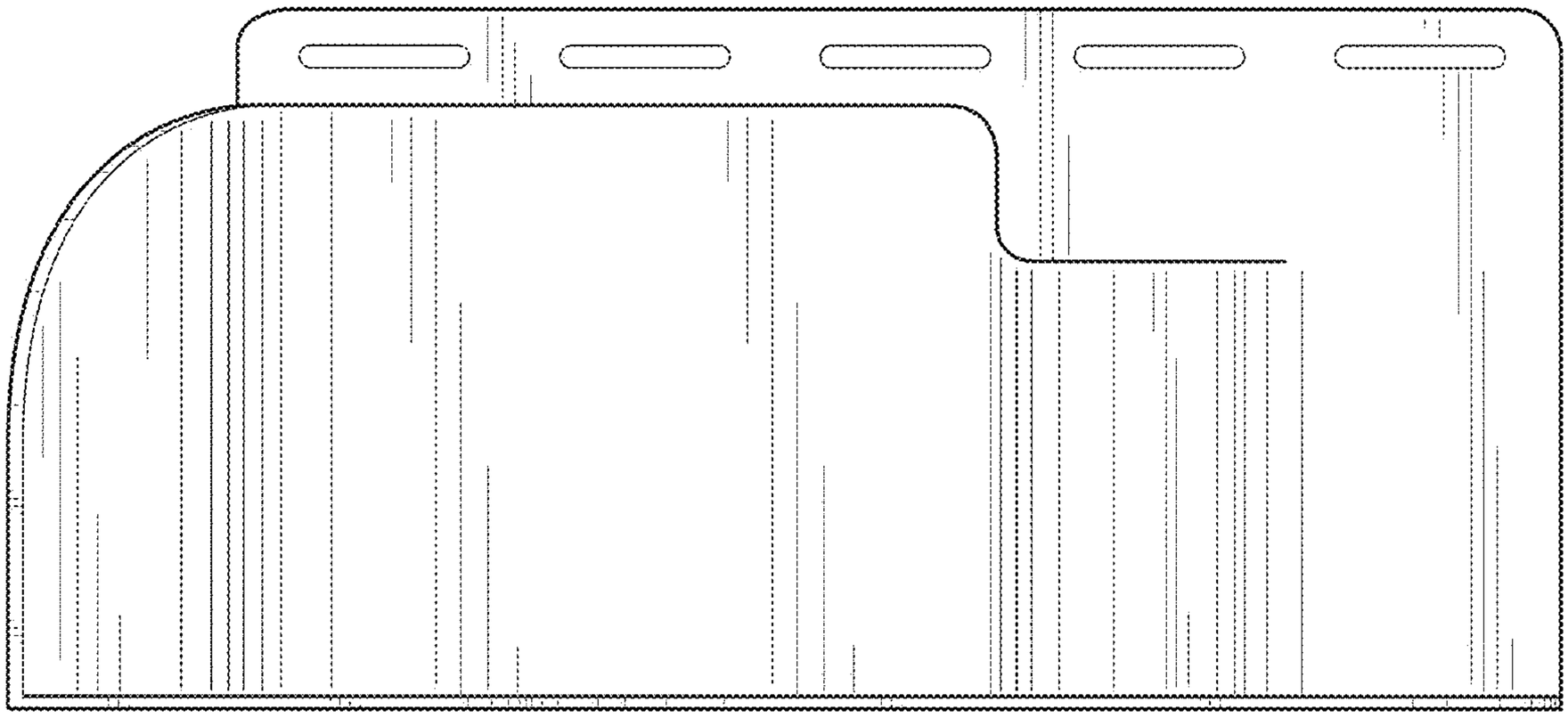

Fig. 6

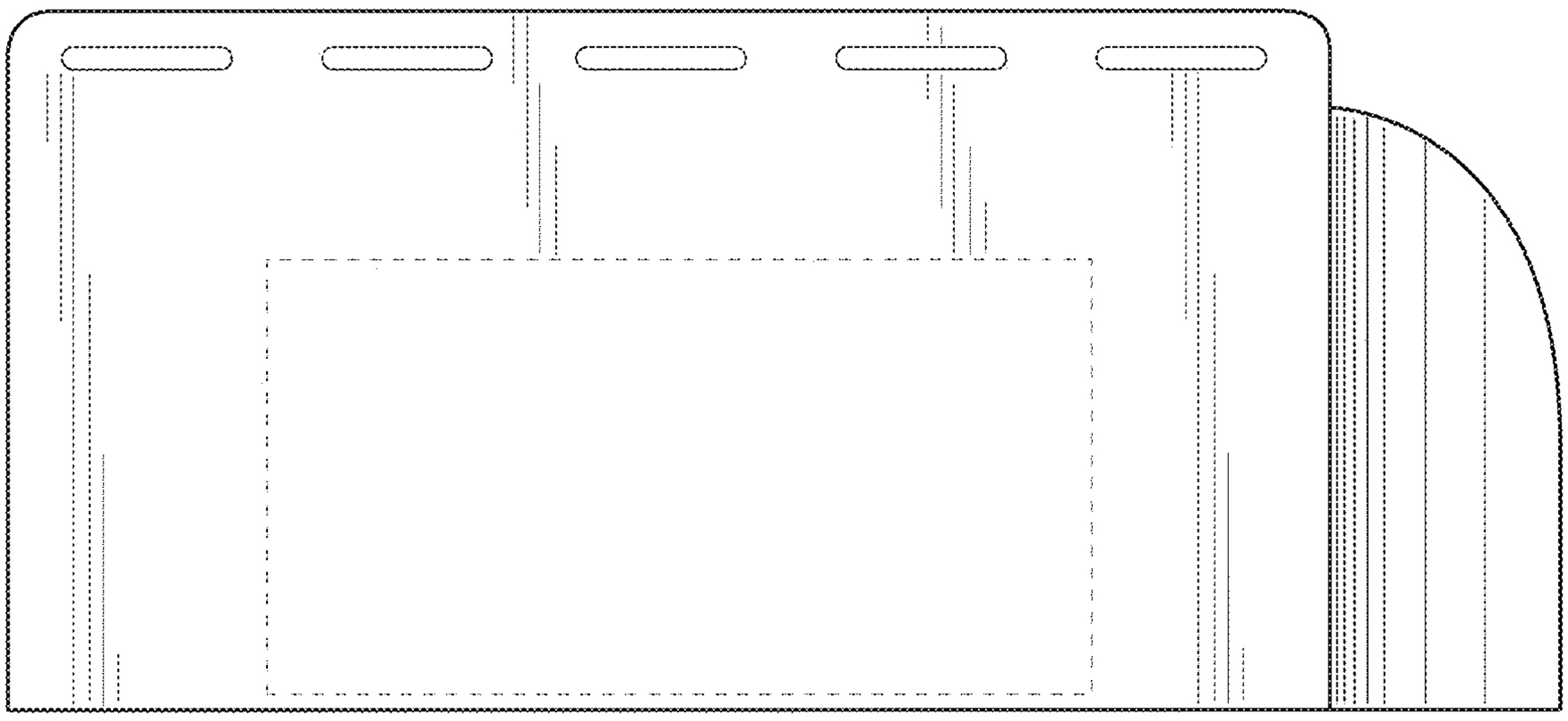

Fig. 7