US00D902371S

(12) United States Design Patent

Wall et al.

(10) Patent No.: US D902,371 S
(45) Date of Patent: ** Nov. 17, 2020

(54) **AIR INTAKE KIT FILTER**

(71) Applicant: **K&N Engineering, Inc.**, Riverside, CA (US)

(72) Inventors: **Jere James Wall**, Helendale, CA (US); **Jonathan Richard Fiello**, Yucaipa, CA (US); **Steve Williams**, Cherry Valley, CA (US)

(73) Assignee: **K&N Engineering, Inc.**, Riverside, CA (US)

(**) Term: **15 Years**

(21) Appl. No.: **29/682,961**

(22) Filed: **Mar. 8, 2019**

(51) **LOC (12) Cl.** **23-04**

(52) **U.S. Cl.**
USPC **D23/365**

(58) **Field of Classification Search**
USPC D23/209, 358, 355, 364, 365, 386–393
CPC F24F 13/0218; F24F 13/06; F24F 13/062; F24F 2013/0608; F24F 2221/14; B64D 33/02; B64D 2033/0246; F02C 7/05
See application file for complete search history.

(56) **References Cited**

U.S. PATENT DOCUMENTS

5,102,436	A	*	4/1992	Grabowski	B01D 46/0023 55/483
D403,414	S	*	12/1998	Shelton	D23/365
D403,416	S	*	12/1998	Shelton	D23/365
D530,807	S	*	10/2006	Miyagishima	D23/365
D642,592	S	*	8/2011	Sands	D12/114
D652,497	S	*	1/2012	Troxell	D23/365
D690,407	S	*	9/2013	Williams	D23/365
D706,831	S	*	6/2014	Schultz	D15/5
D716,429	S	*	10/2014	Carter	D23/365
D736,263	S	*	8/2015	Schultz	D15/5
D739,513	S	*	9/2015	Williams	B01D 46/0023 D23/365
D777,211	S	*	1/2017	Wall	D15/5
D800,609	S	*	10/2017	Trask	D12/110
D800,883	S	*	10/2017	Trask	D23/365
D835,767	S	*	12/2018	Williams	D23/365
D841,694	S	*	2/2019	Tomlinson	D15/5
D852,680	S	*	7/2019	Ness	D12/114

OTHER PUBLICATIONS

Amazon.com, Assault Racing Products Air Cleaner, reviewed May 2016, online product page, retrieved Apr. 9, 2020 from <URL: https://www.amazon.com/Assault-Racing-Products-Polished-Aluminum/dp/B00S75DJ30> (Year: 2016).*

Carid.com, K&N Oval Tapered Red Air Filter, undated online product page, retrieved Apr. 9, 2020 from <URL:https://www.carid.com/knn/knn-oval-tapered-air-filter-2056587057.html> (Year: 2020).*

* cited by examiner

Primary Examiner — Sheryl Lane
Assistant Examiner — Calvin E Vansant
(74) *Attorney, Agent, or Firm* — Rutan & Tucker LLP; Hani Z. Sayed

(57) **CLAIM**

The ornamental design for an air intake kit filter, as shown and described.

DESCRIPTION

FIG. **1**—Top, front, right side perspective view;
FIG. **2**—Front elevation view;
FIG. **3**—Rear elevation view;
FIG. **4**—Left side elevation view;
FIG. **5**—Right side elevation view;
FIG. **6**—Top plan view; and,
FIG. **7**—Bottom plan view.

The broken lines depict portions of the air intake kit filter that form no part of the claimed design.

1 Claim, 6 Drawing Sheets

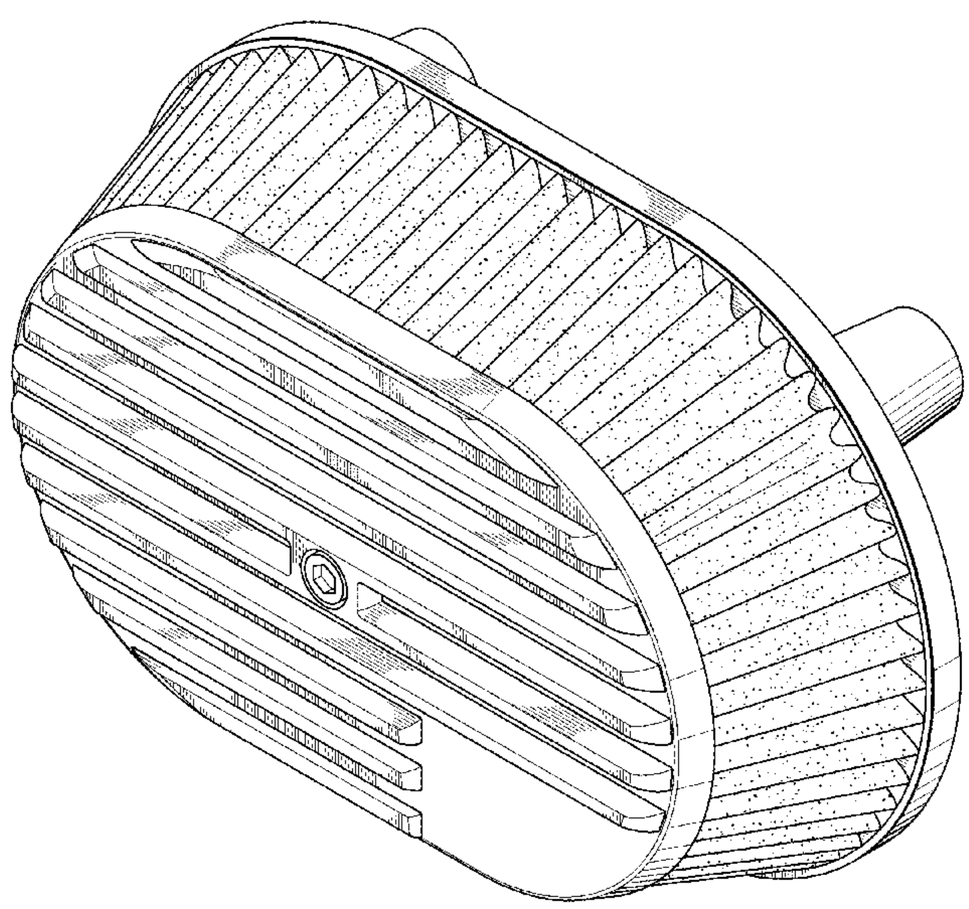

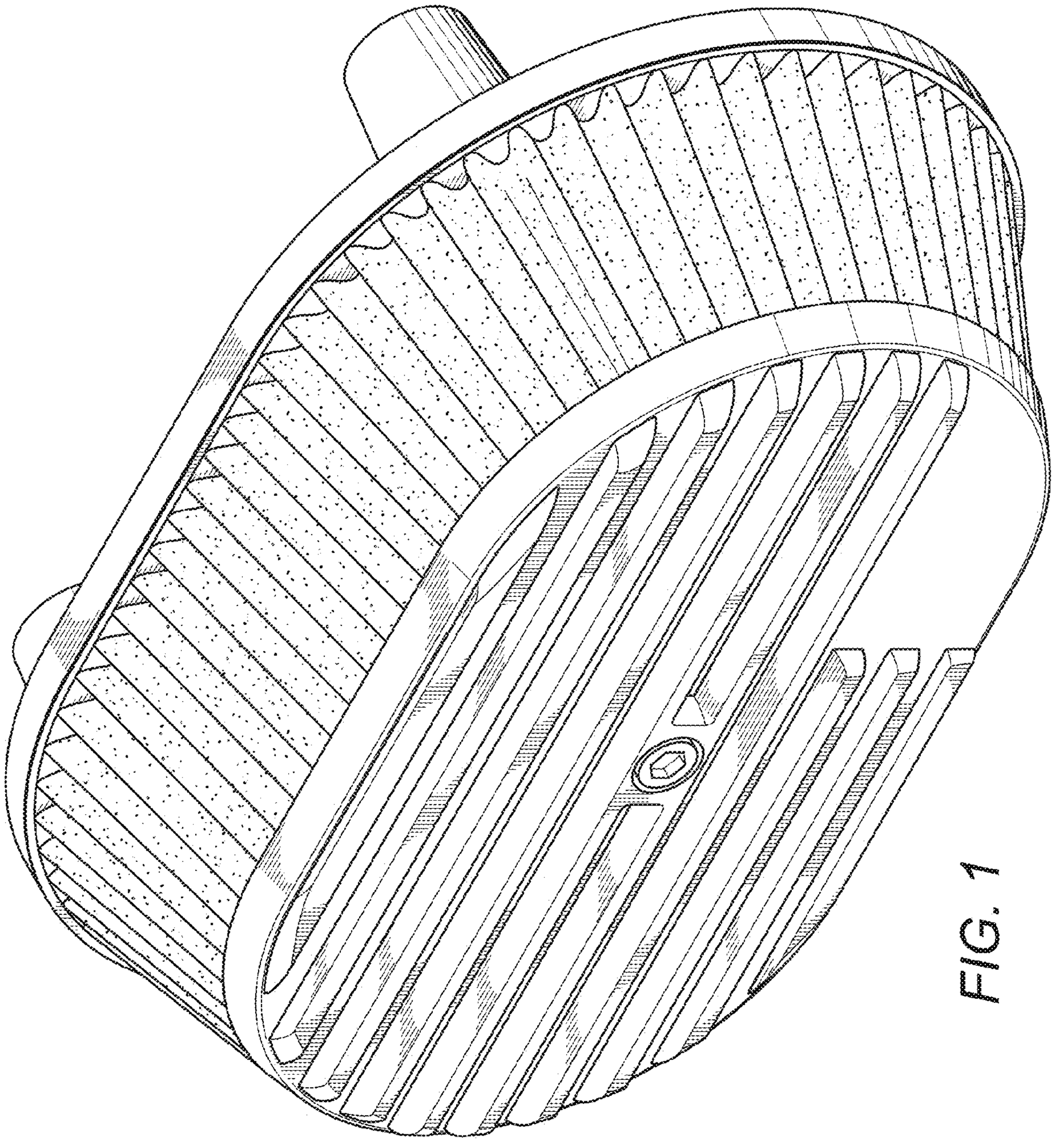

FIG. 1

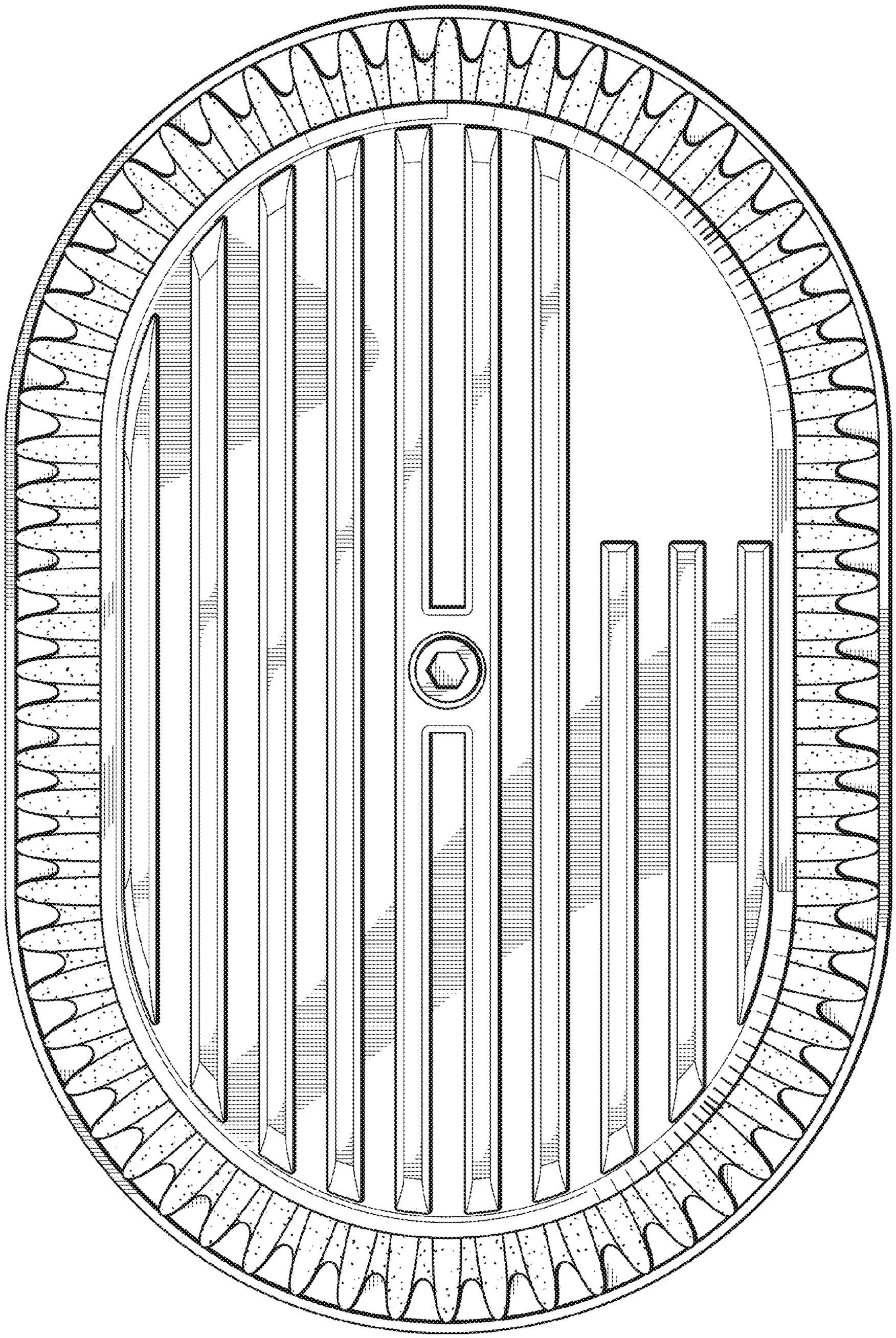

FIG. 2

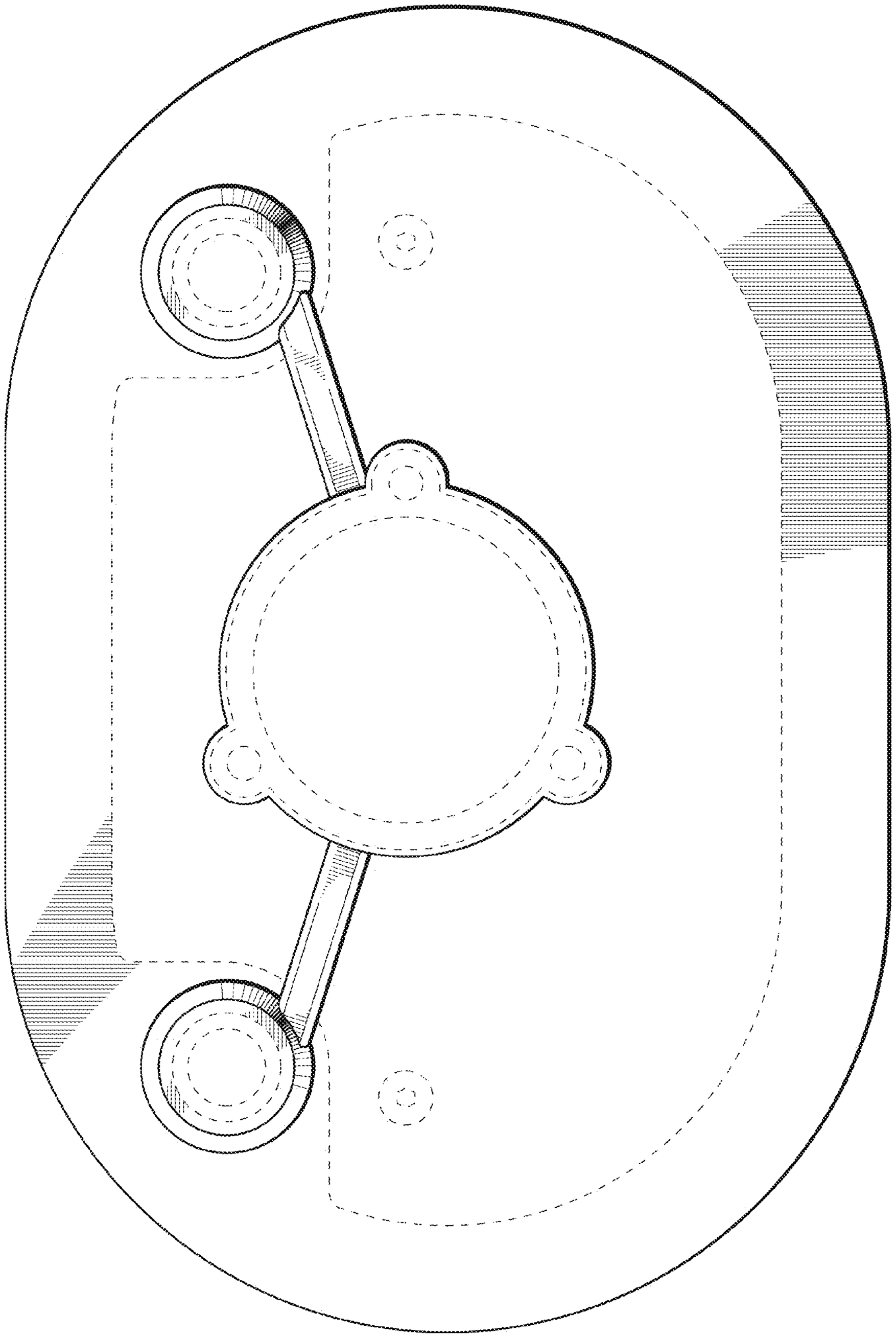

FIG. 3

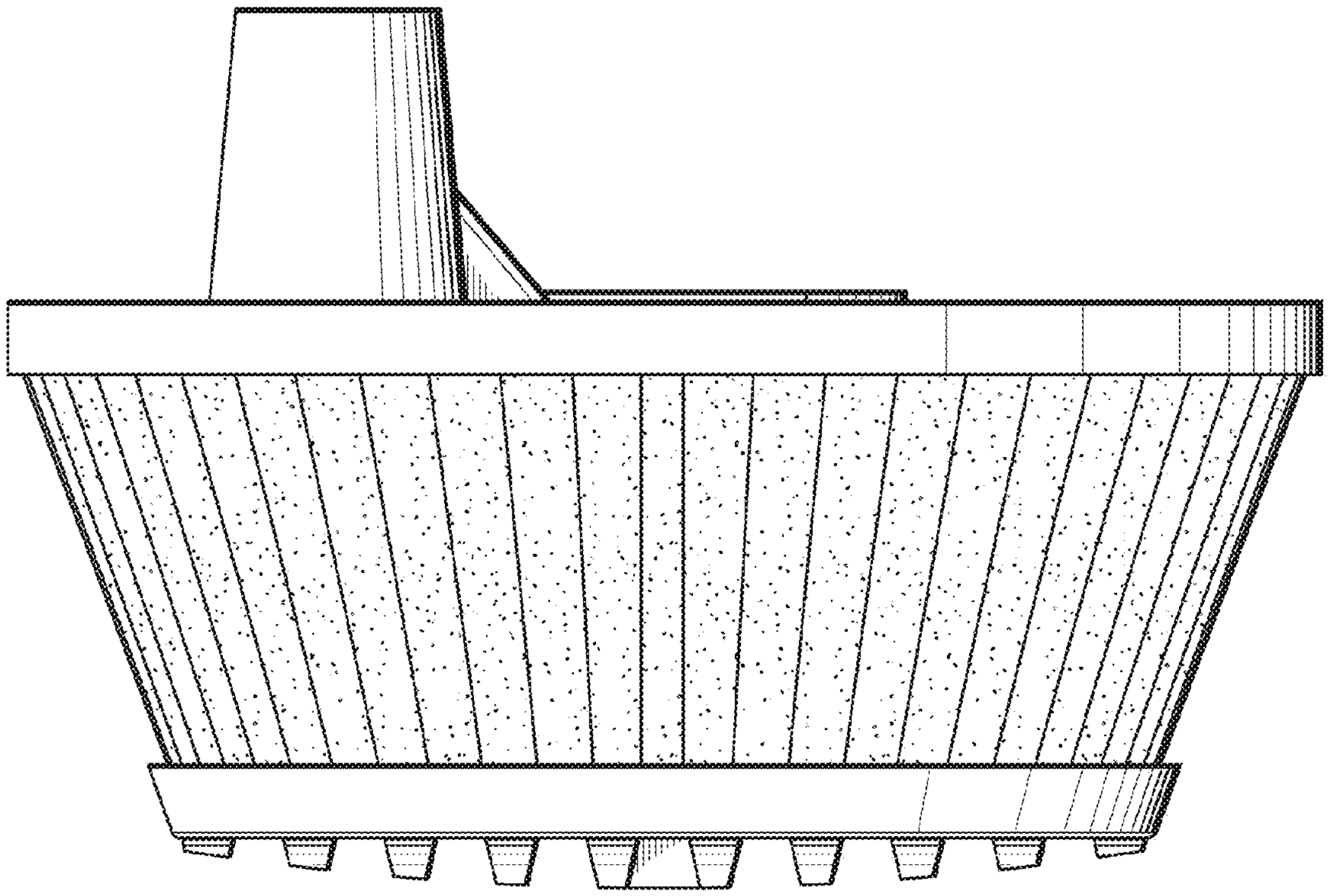

FIG. 5

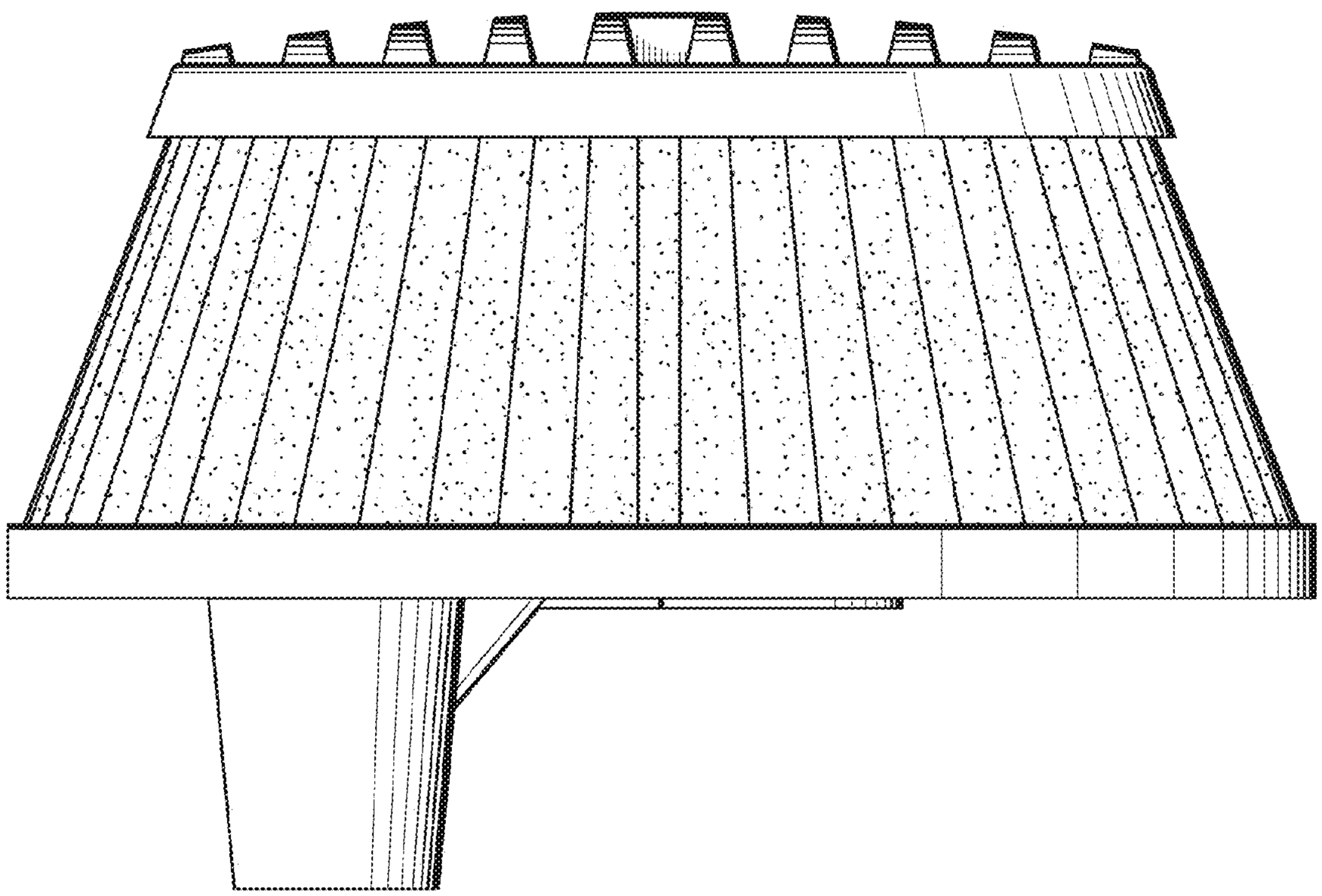

FIG. 4

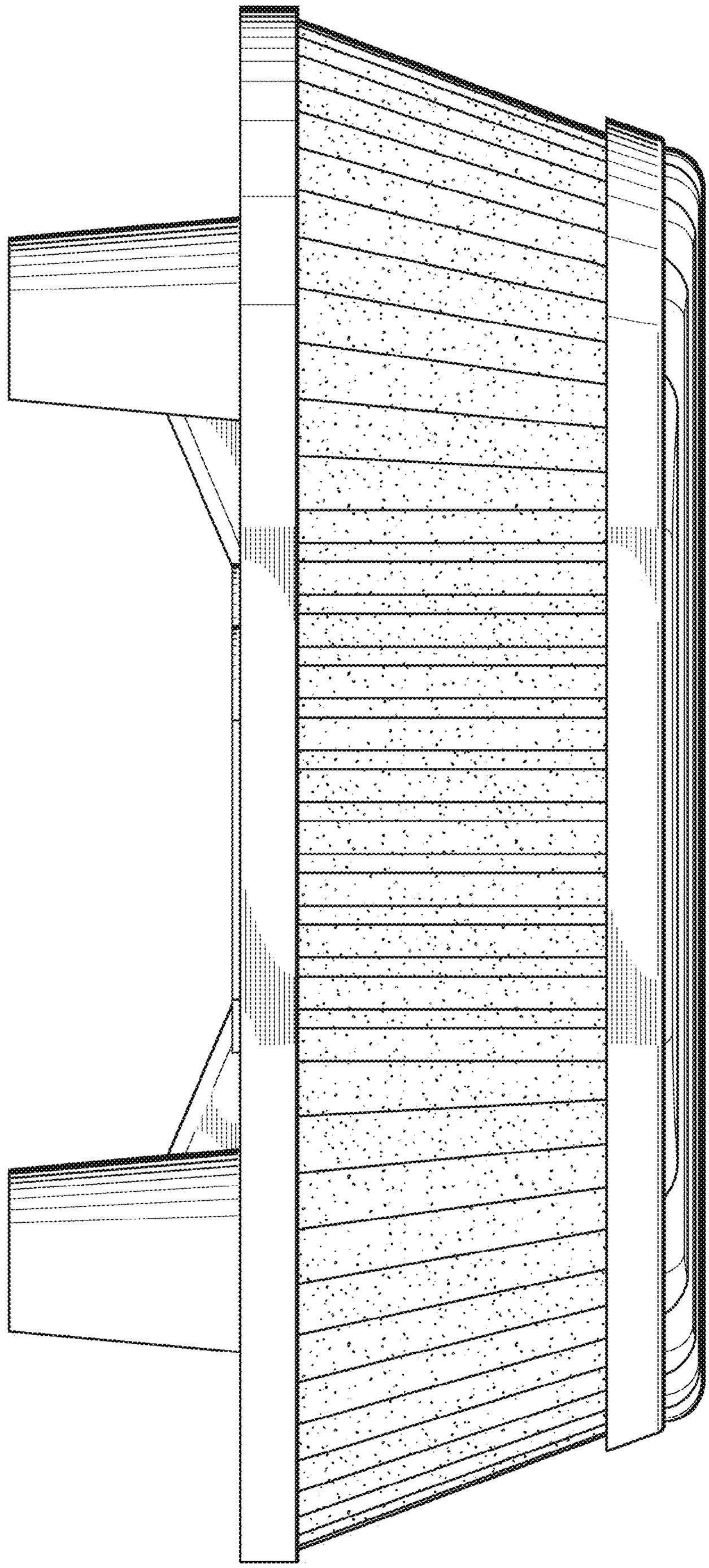

FIG. 6

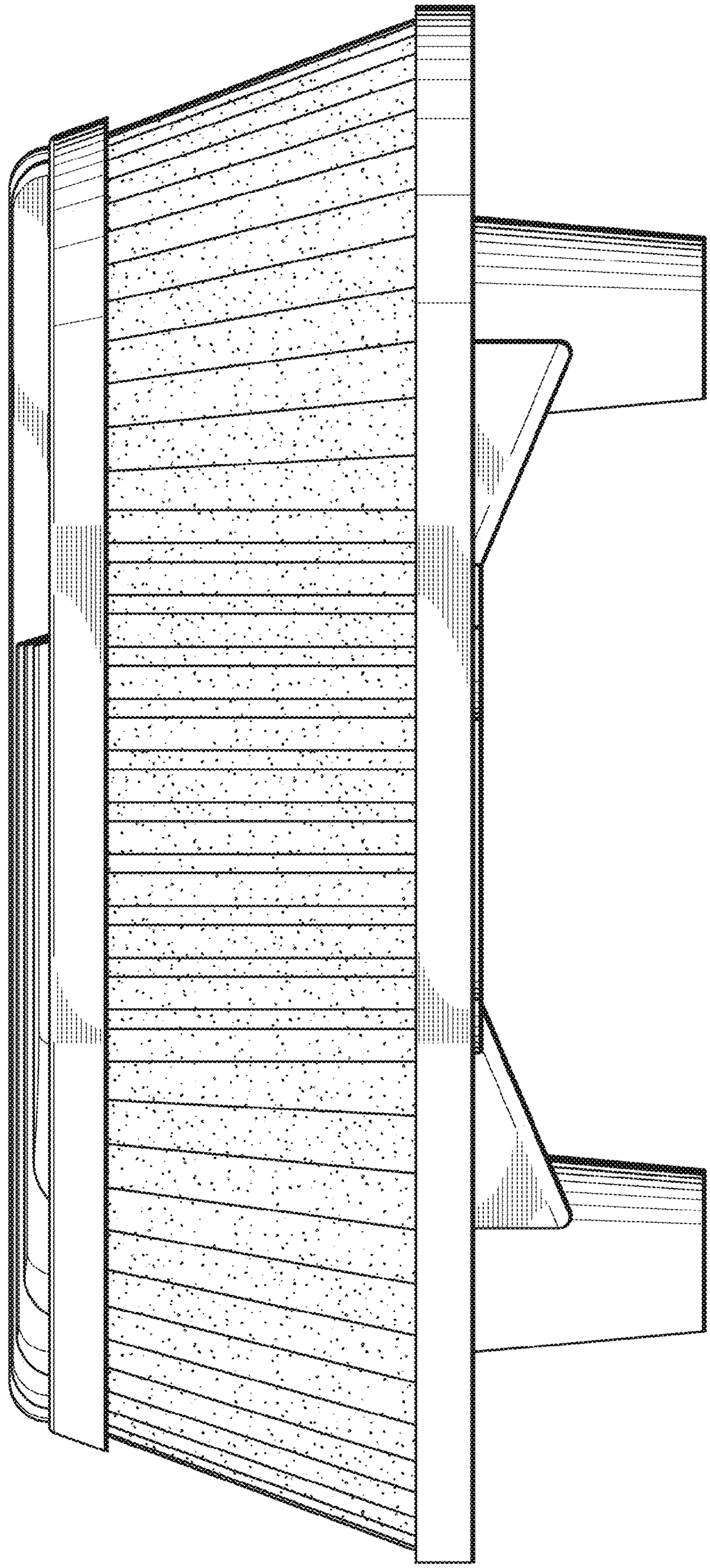

FIG. 7