US00D900390S

(12) United States Design Patent
Go

(10) Patent No.: US D900,390 S
(45) Date of Patent: ** Oct. 27, 2020

(54) **HAIR DRYER**

(71) Applicant: **SHAPL INC.**, Seoul (KR)

(72) Inventor: **Jeong Jin Go**, Seoul (KR)

(73) Assignee: **SHAPL INC.**, Seoul (KR)

(**) Term: **15 Years**

(21) Appl. No.: **29/697,819**

(22) Filed: **Jul. 11, 2019**

(30) **Foreign Application Priority Data**

May 2, 2019 (KR) 30-2019-0020908

(51) **LOC (12) Cl.** **28-03**

(52) **U.S. Cl.**
USPC **D28/13**

(58) **Field of Classification Search**
USPC D28/12–19
CPC A45D 20/04; A45D 20/06; A45D 20/08; A45D 20/10; A45D 20/128
See application file for complete search history.

(56) **References Cited**

U.S. PATENT DOCUMENTS

D250,722 S * 1/1979 Cousins D28/13
D251,989 S * 5/1979 Rizzuto D28/13
D253,012 S * 9/1979 Rakocy D28/13
D254,328 S * 2/1980 Benty D28/13
D254,451 S * 3/1980 Battaglia D28/13
D257,067 S * 9/1980 Muller D28/13
D257,492 S * 11/1980 Cousins D28/13
D262,060 S * 11/1981 Nagelkerke D28/13
D262,061 S * 11/1981 Janssens D28/13
D299,976 S * 2/1989 Elkerbout D28/13
5,279,048 A * 1/1994 Lawall A45D 20/12 34/90

* cited by examiner

Primary Examiner — Zenia I Bennett
(74) *Attorney, Agent, or Firm* — Rabin & Berdo, P.C.

(57) **CLAIM**

The ornamental design for a hair dryer, as shown and described.

DESCRIPTION

FIG. **1** is a front, right perspective view of a hair dryer showing my new design;
FIG. **2** is a front elevational view thereof;
FIG. **3** is a rear elevational view thereof;
FIG. **4** is a left side elevational view thereof;
FIG. **5** is a right side elevational view thereof;
FIG. **6** is a top view thereof;
FIG. **7** is a bottom view thereof;
FIG. **8** is a rear right perspective view thereof;
FIG. **9** is a front right perspective view thereof when a lower part of the hair dryer is folded;
FIG. **10** is a front elevational view of FIG. **9**;
FIG. **11** is a rear elevational view of FIG. **9**;
FIG. **12** is a left elevational view of FIG. **9**;
FIG. **13** is a right elevational view of FIG. **9**;
FIG. **14** is a top elevational view of FIG. **9**;
FIG. **15** is a bottom elevational view of FIG. **9**;
FIG. **16** is a rear right perspective view thereof when the lower part of the hair dryer is folded; and,
FIGS. **17-21** are perspective views thereof in use in a folded state or an unfolded state.

1 Claim, 19 Drawing Sheets

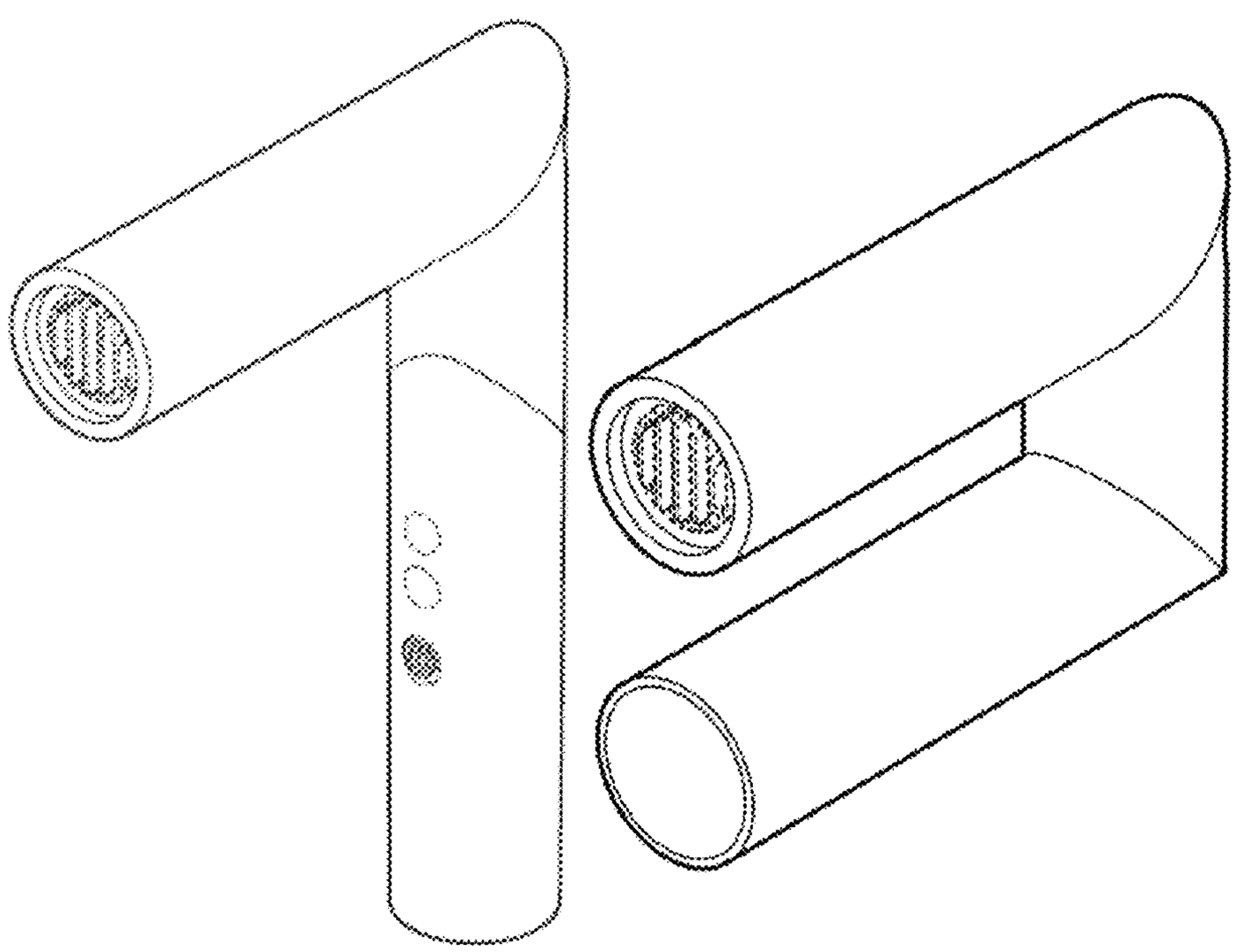

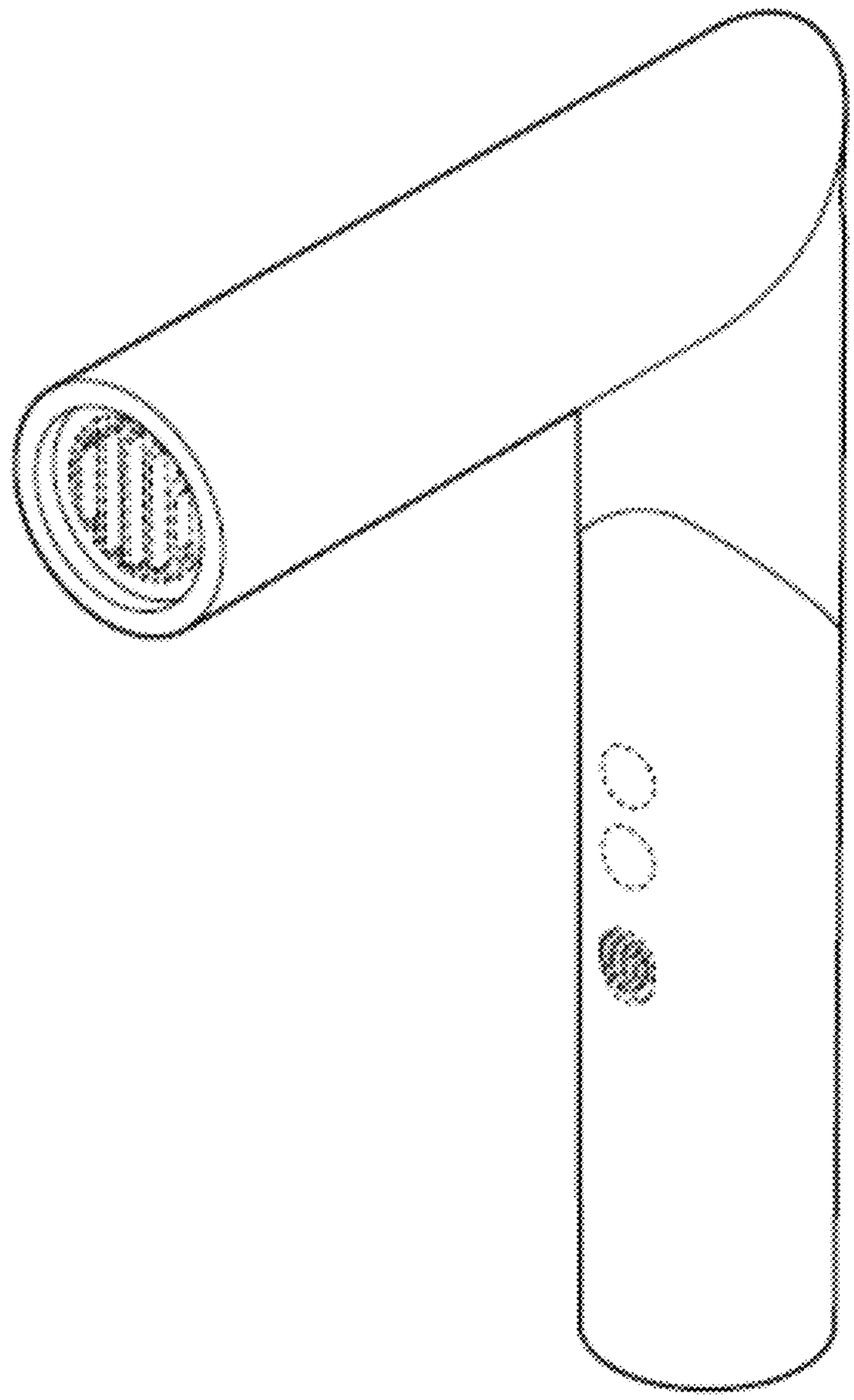

FIG. 1

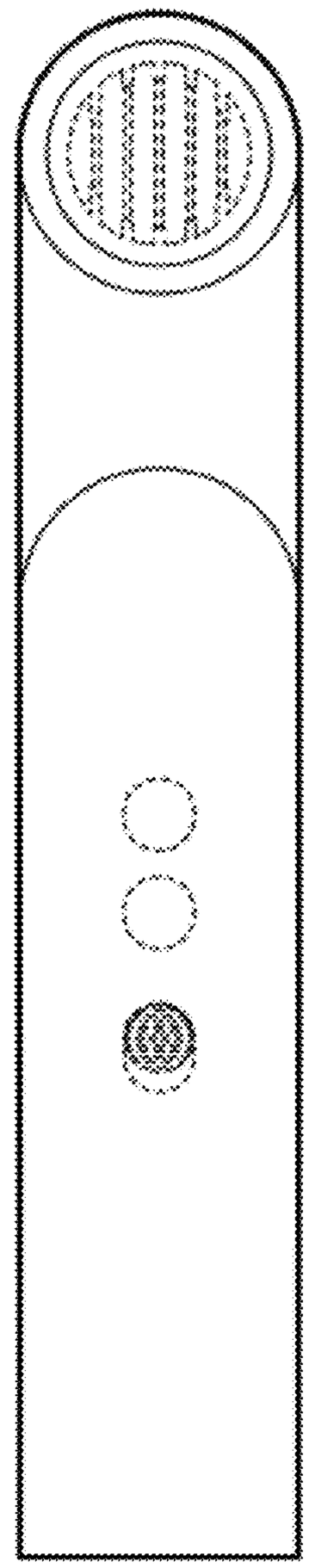

FIG. 2

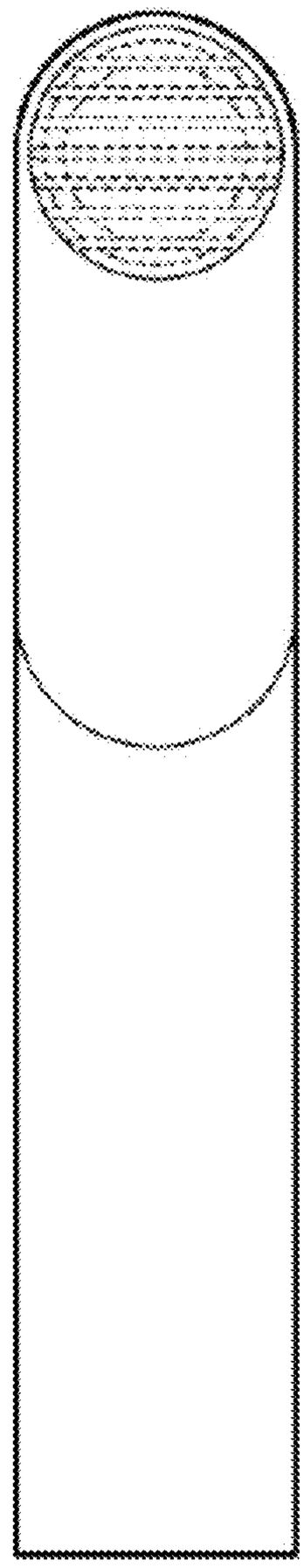

FIG. 3

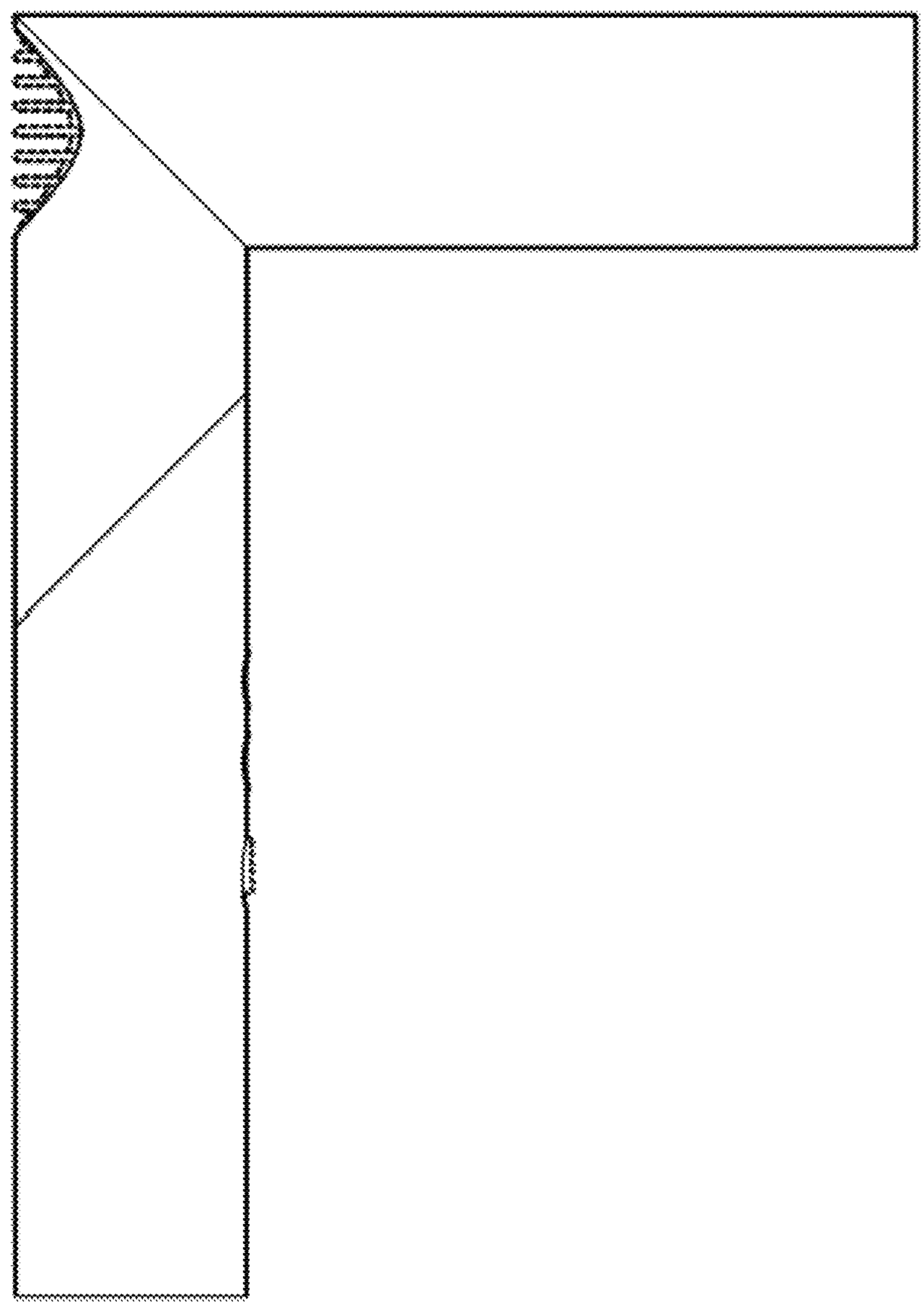

FIG. 4

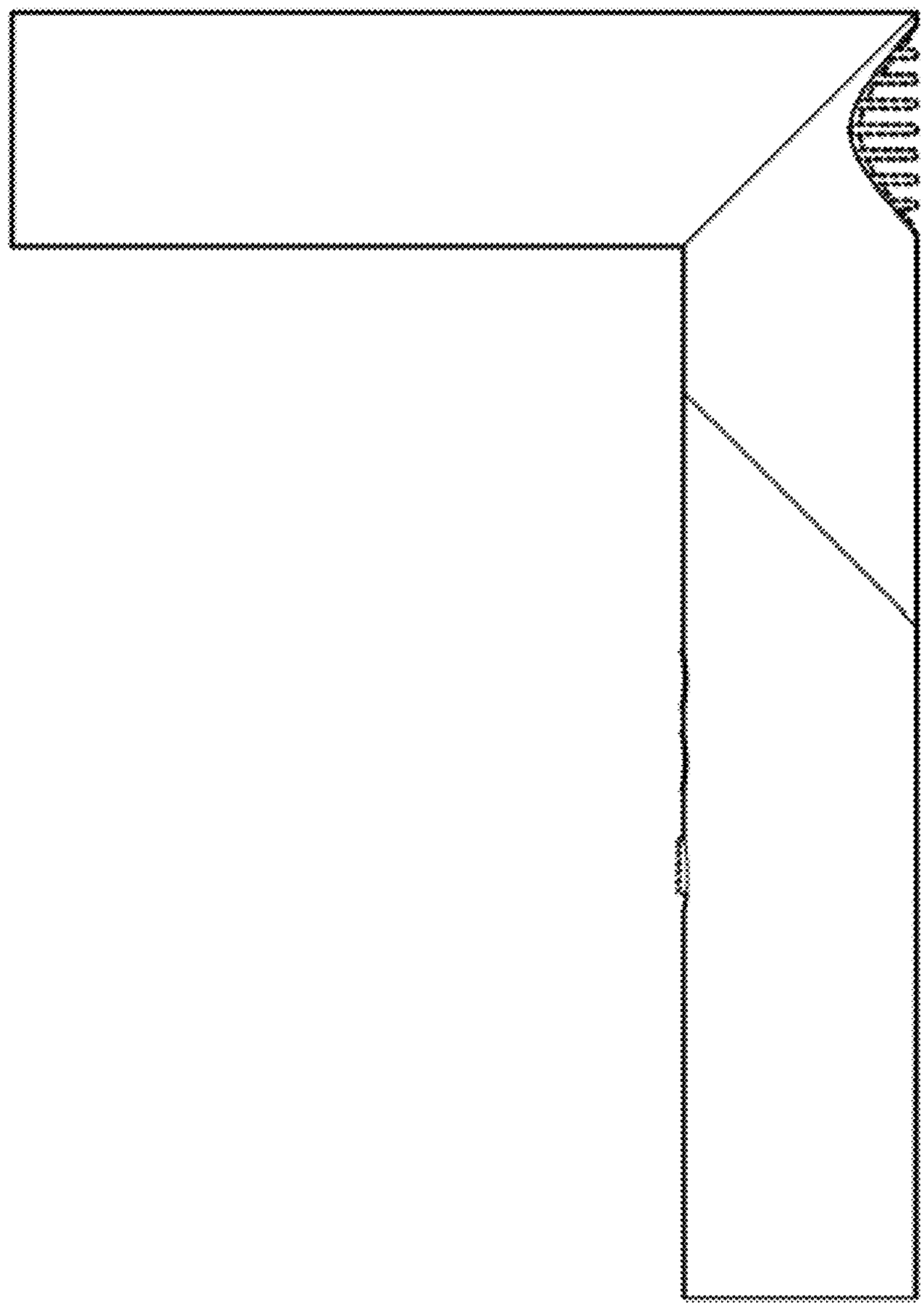

FIG. 5

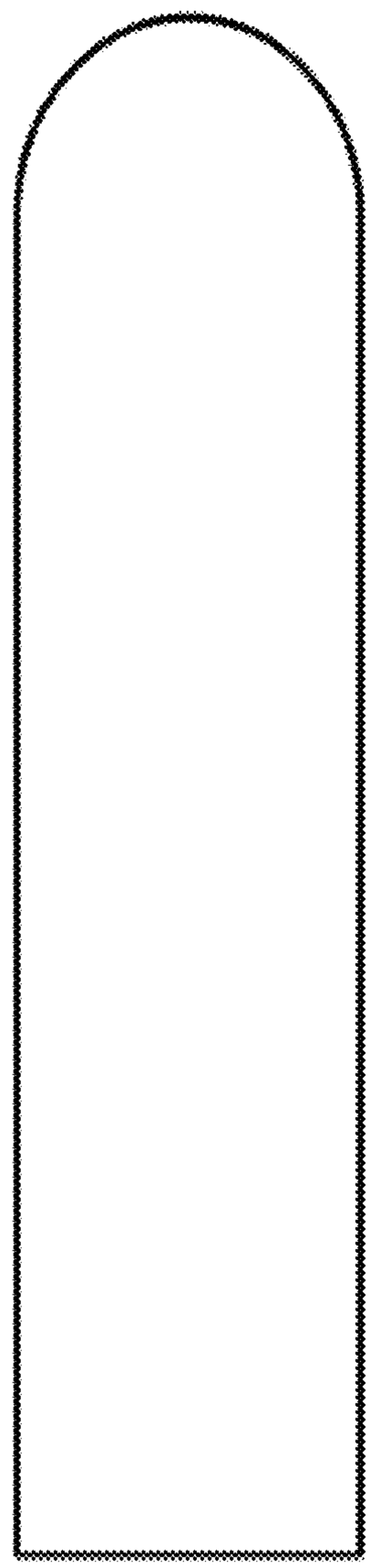

FIG. 6

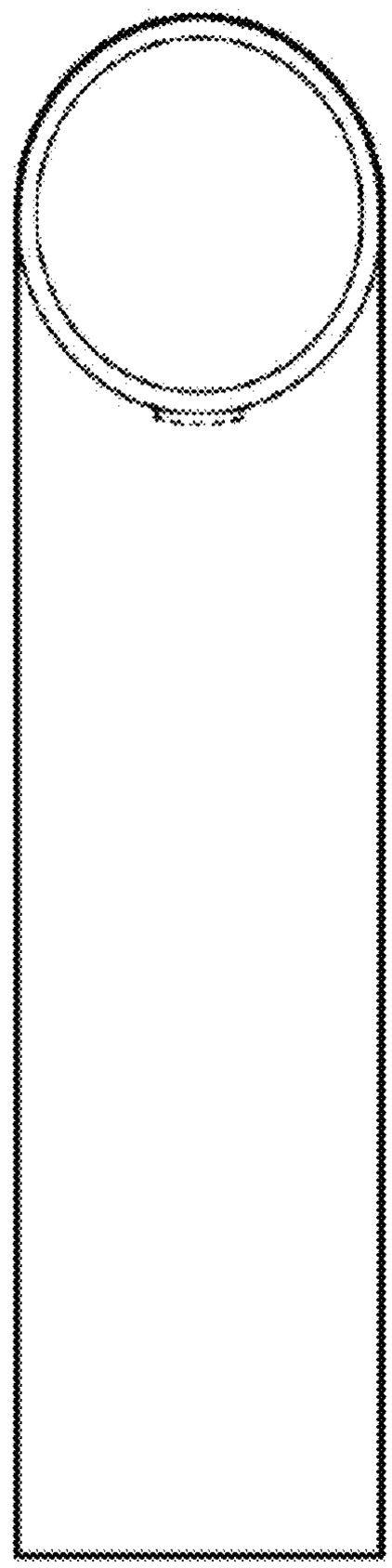

FIG. 7

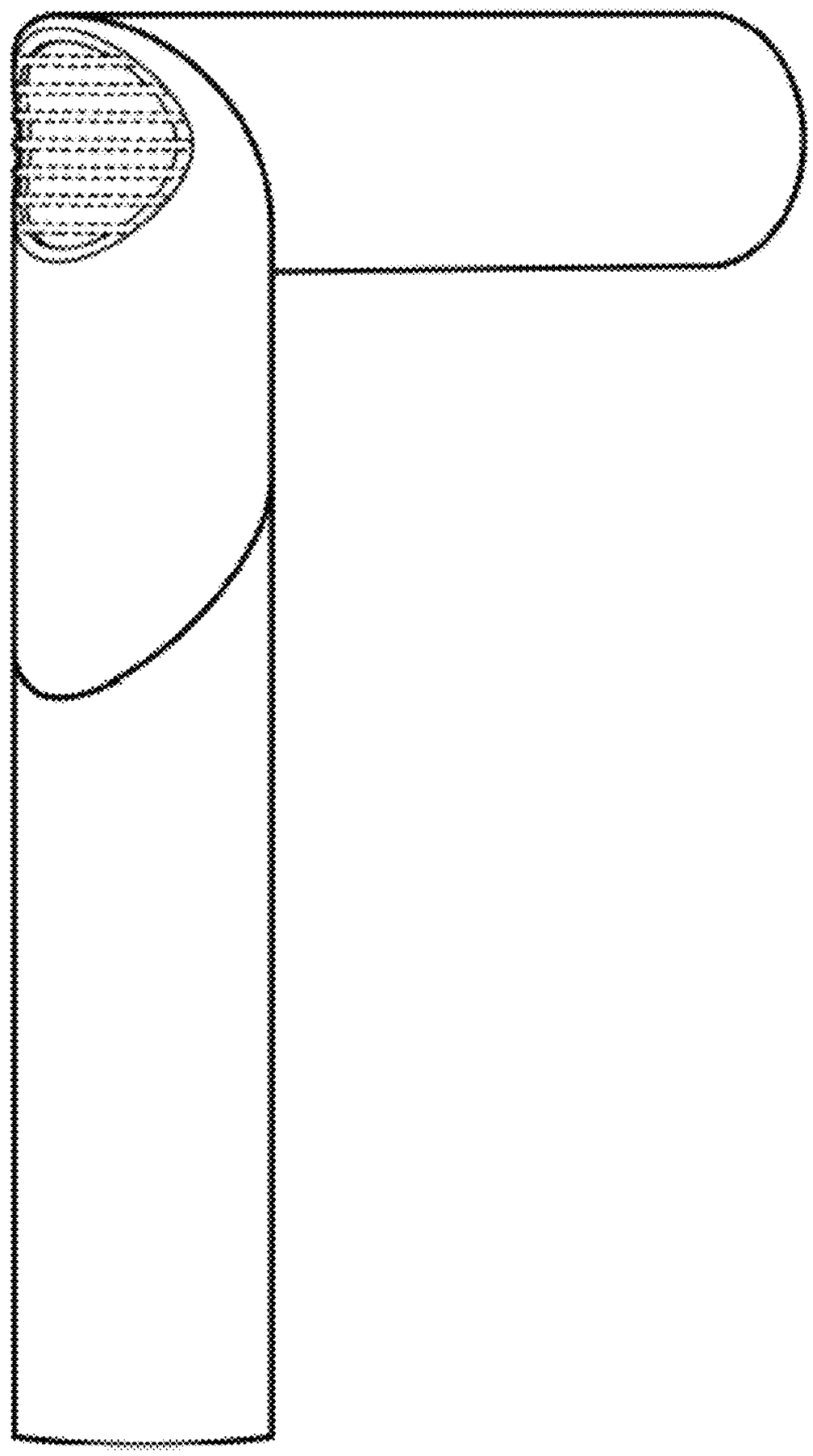

FIG. 8

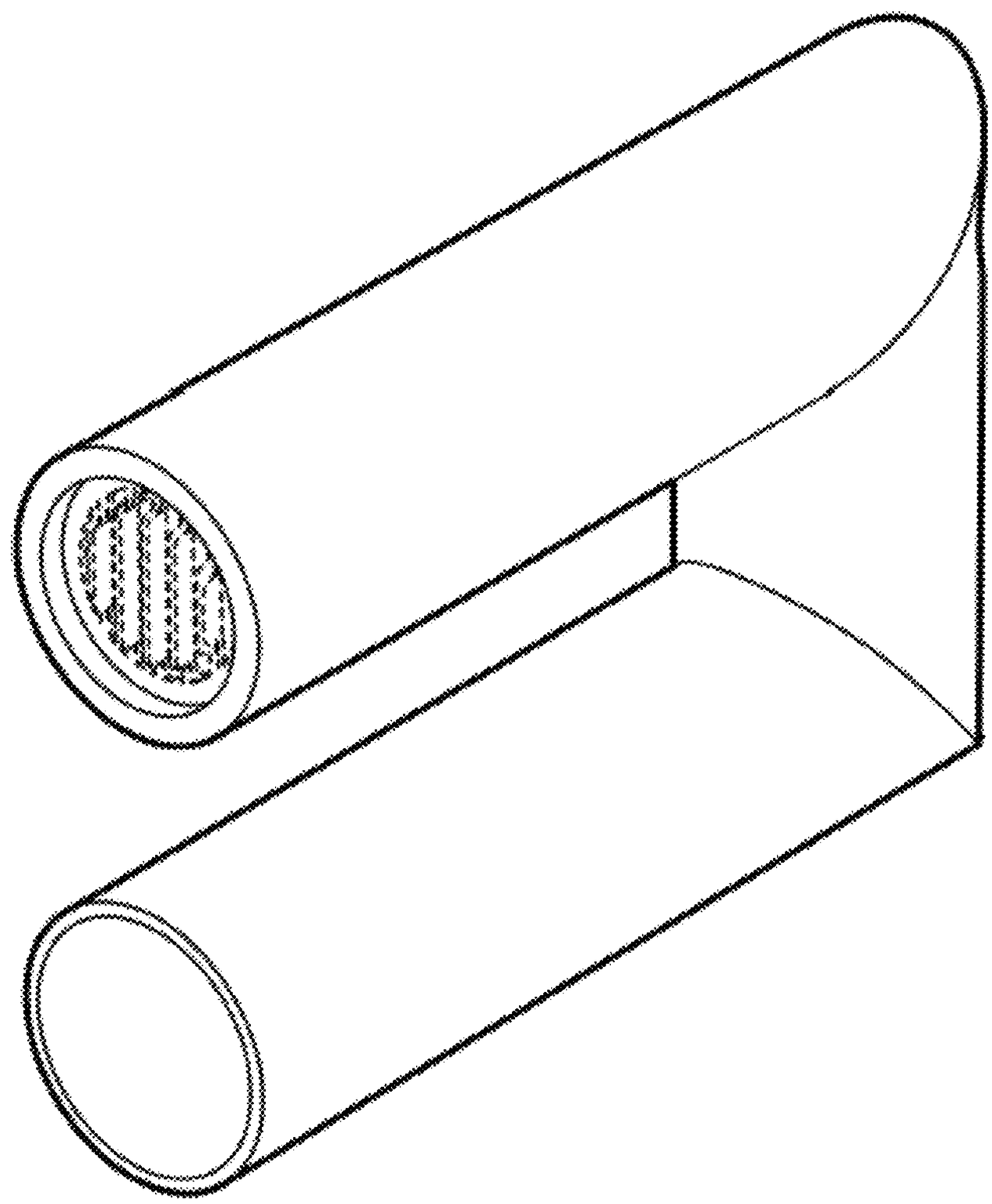

FIG. 9

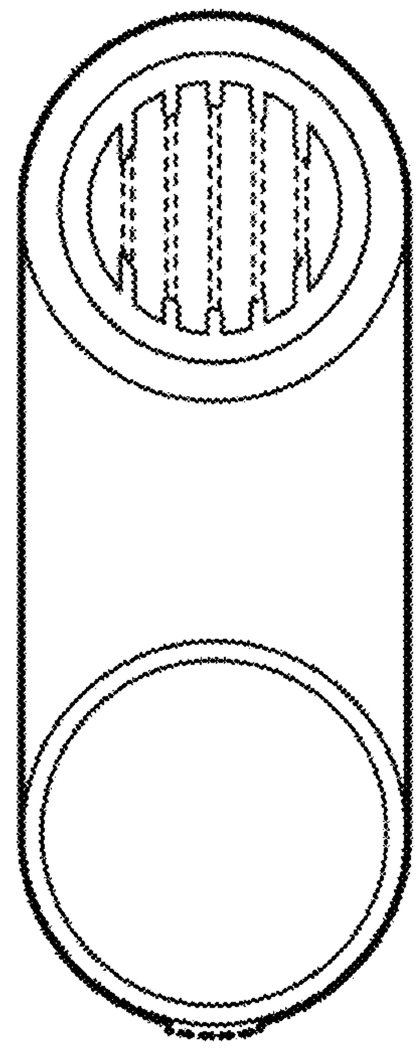

FIG. 10

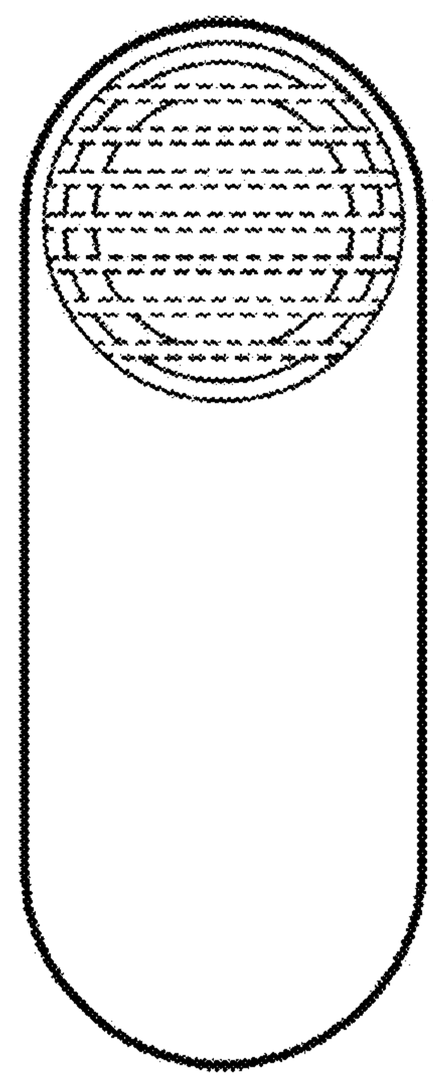

FIG. 11

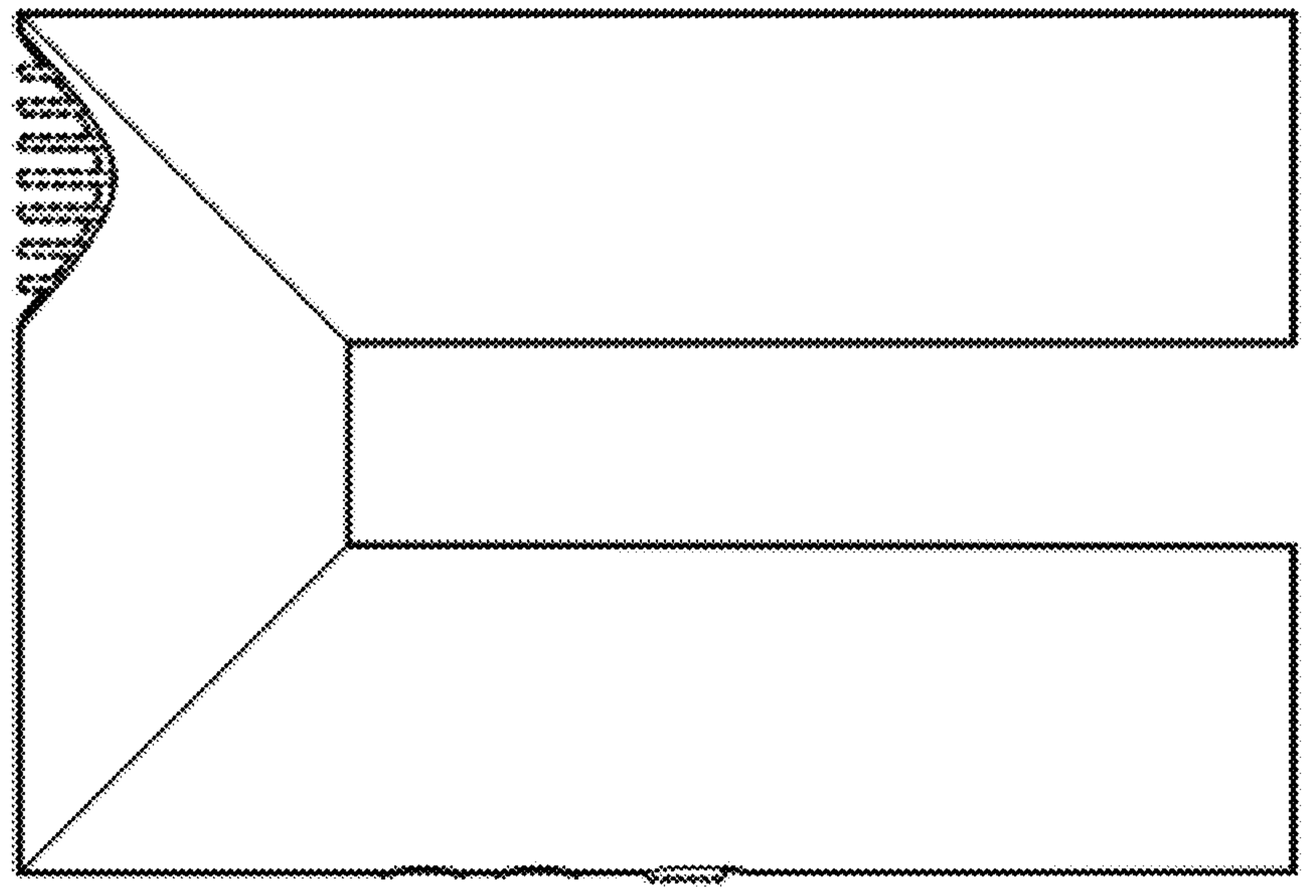

FIG. 12

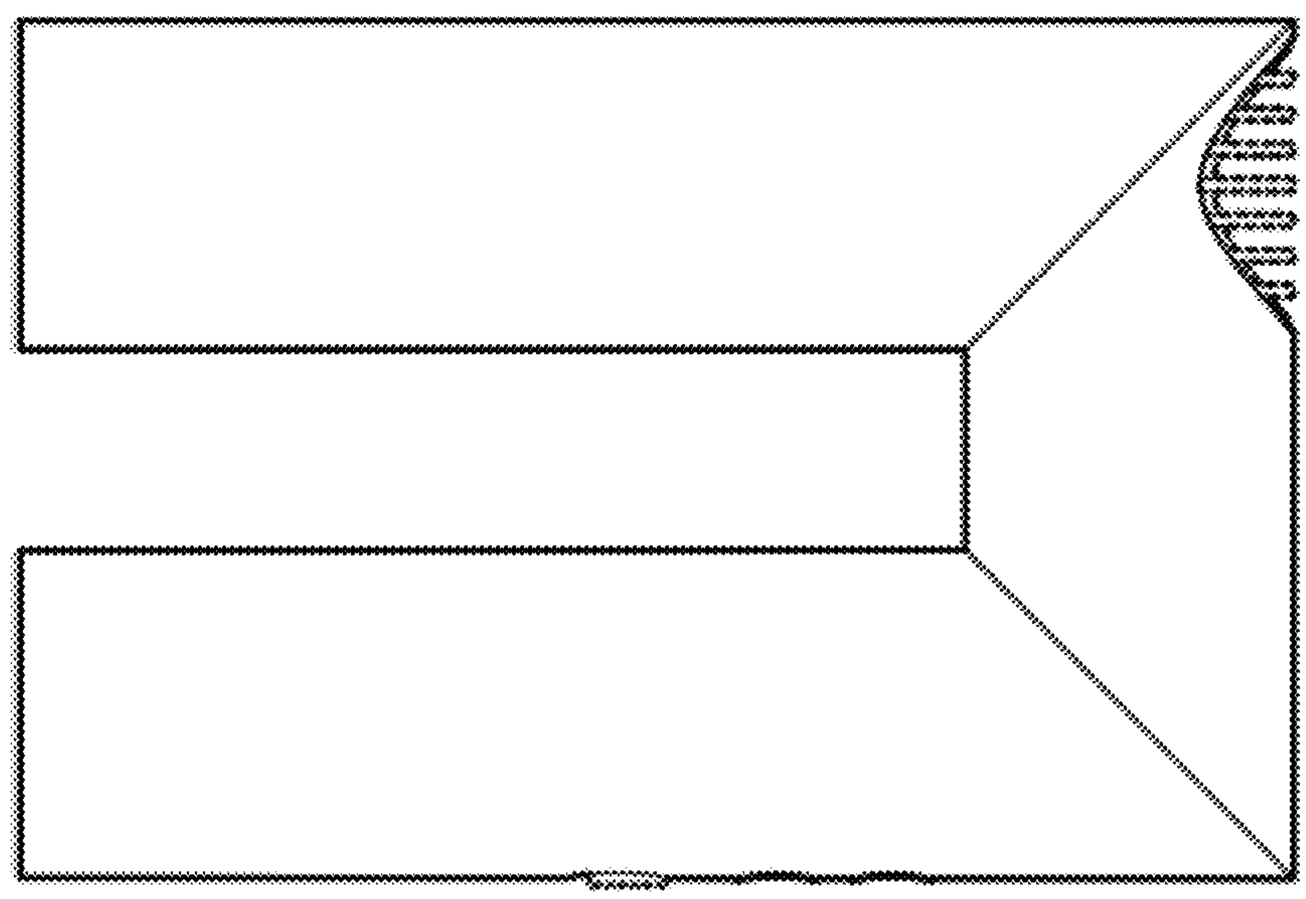

FIG. 13

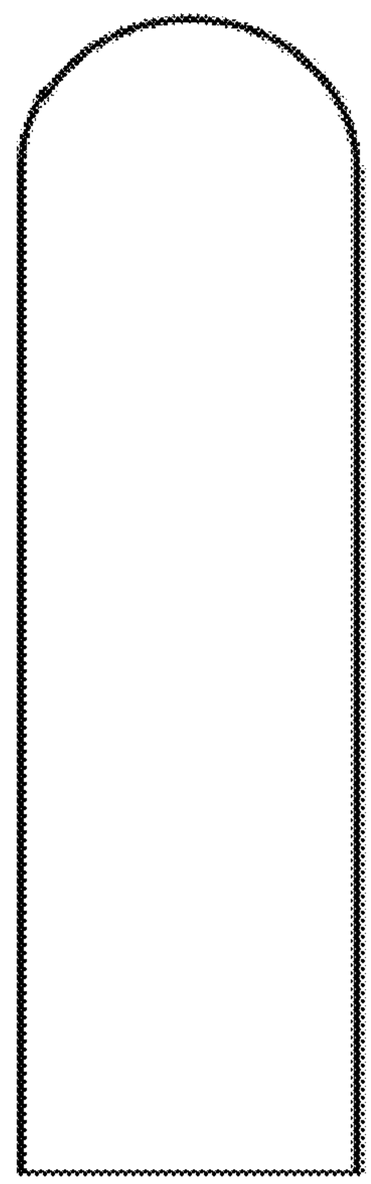

FIG. 14

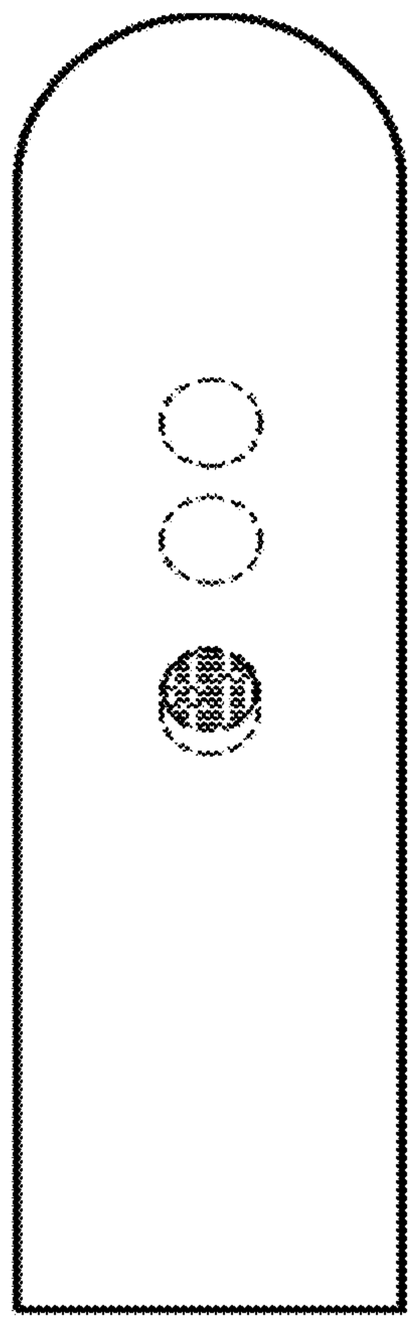

FIG. 15

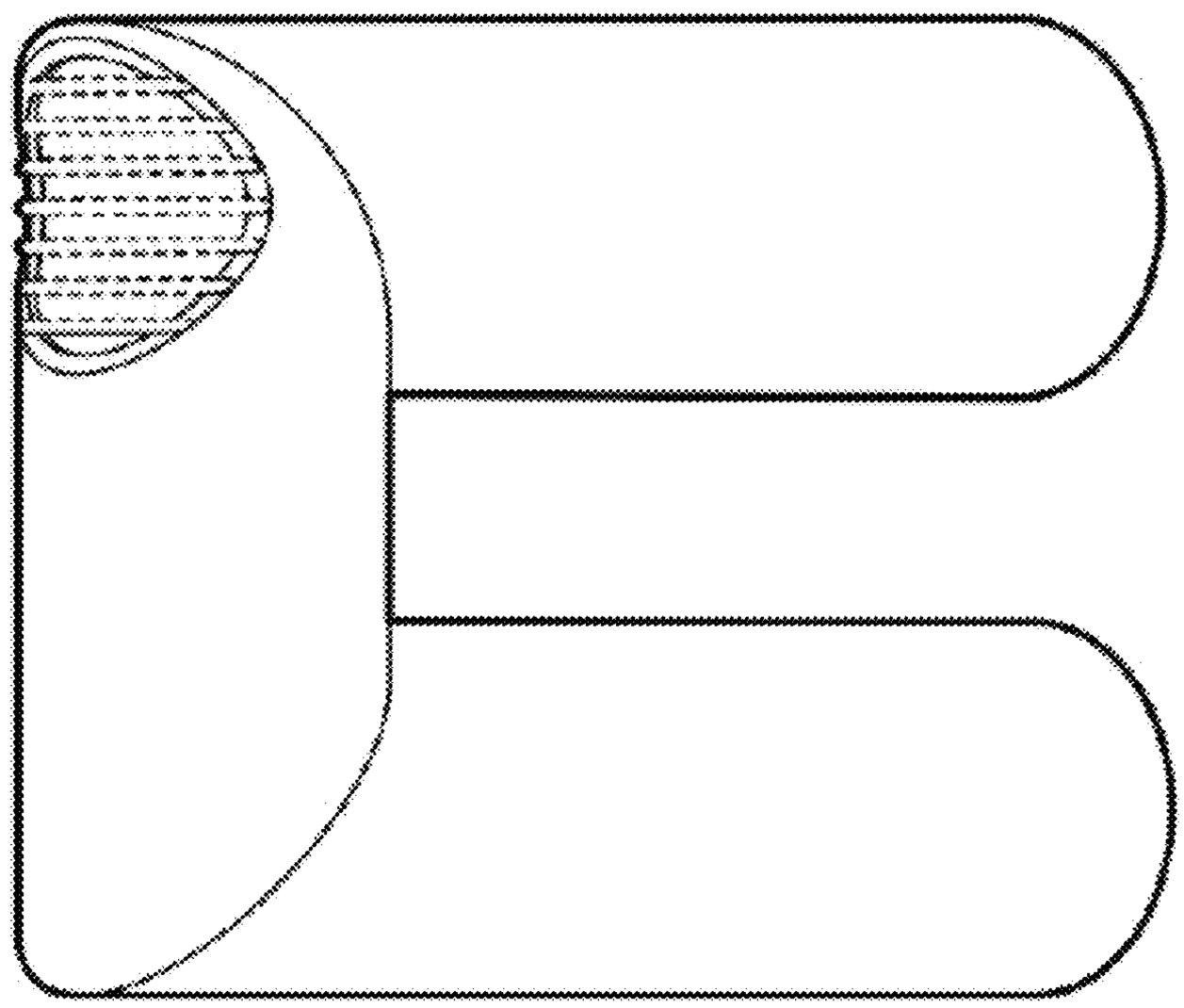

FIG. 16

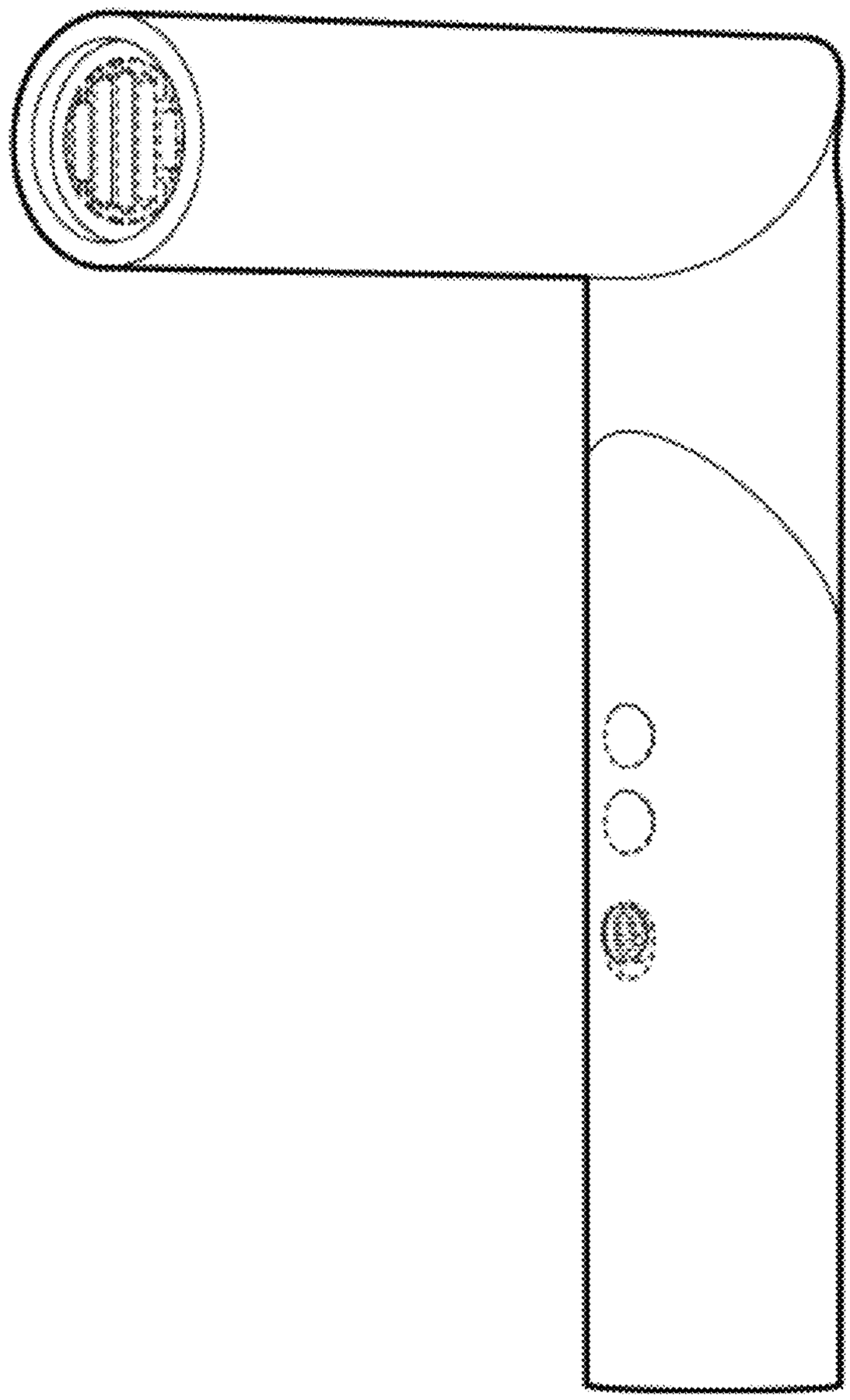

FIG. 17

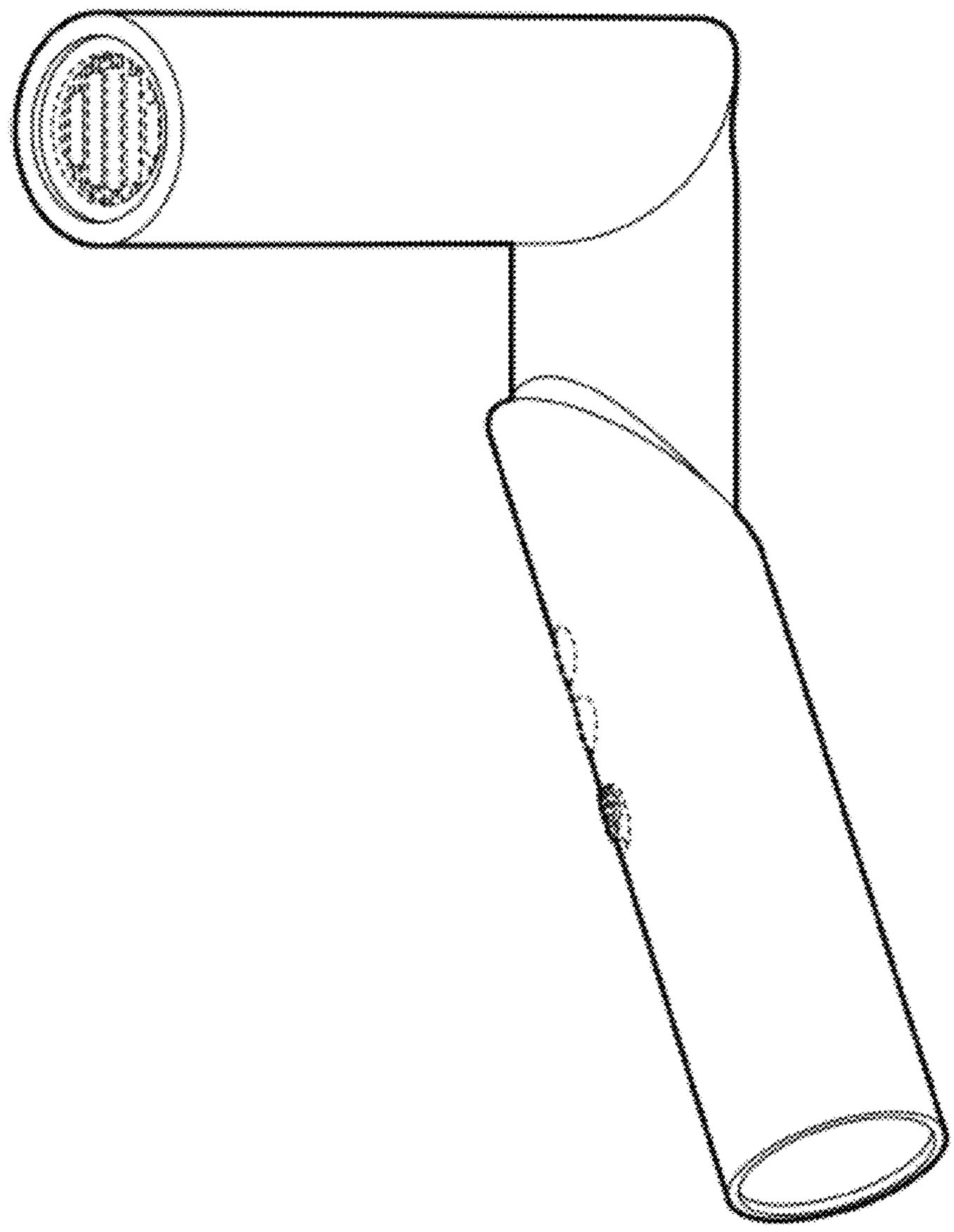

FIG. 18

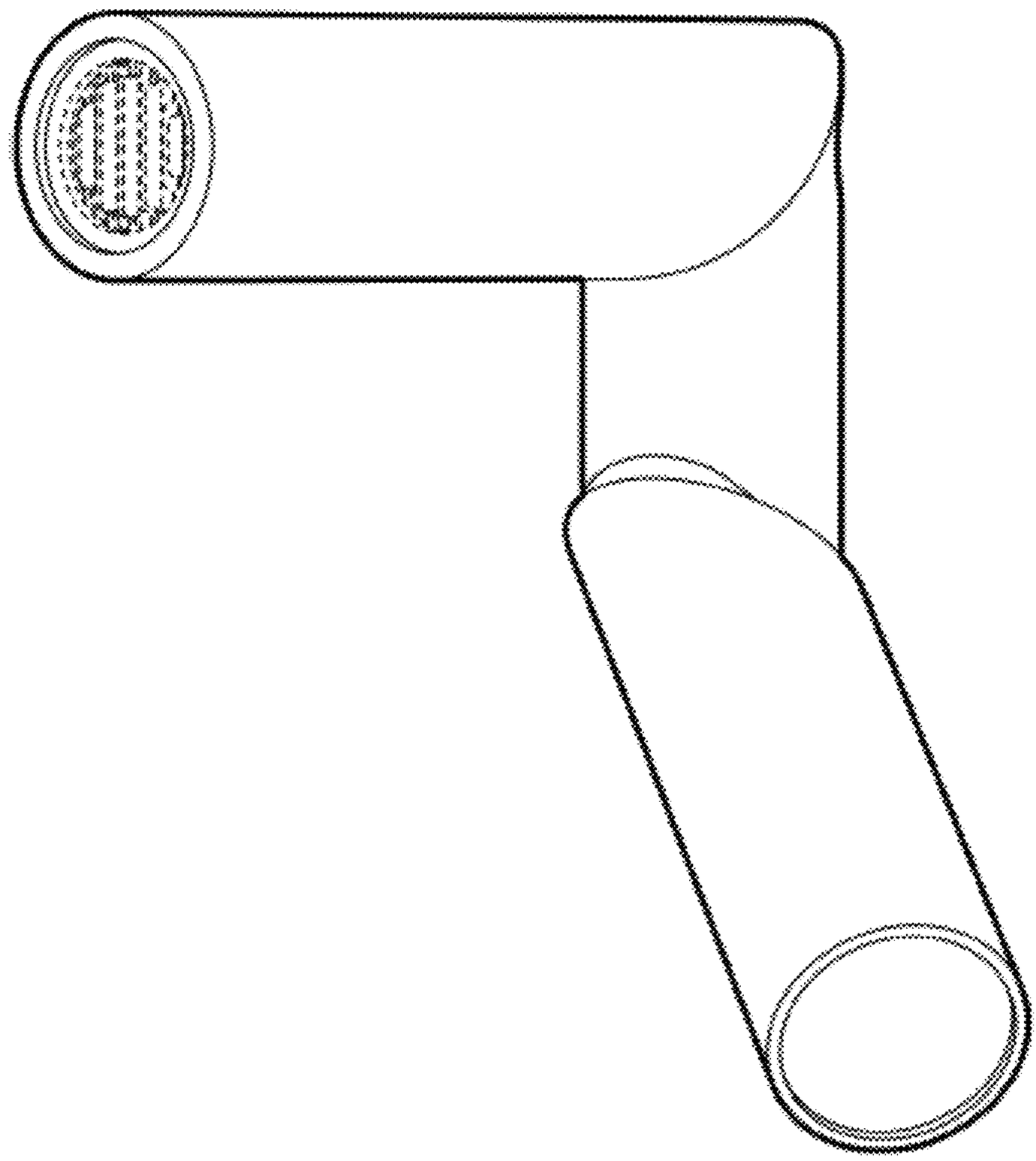

FIG. 19

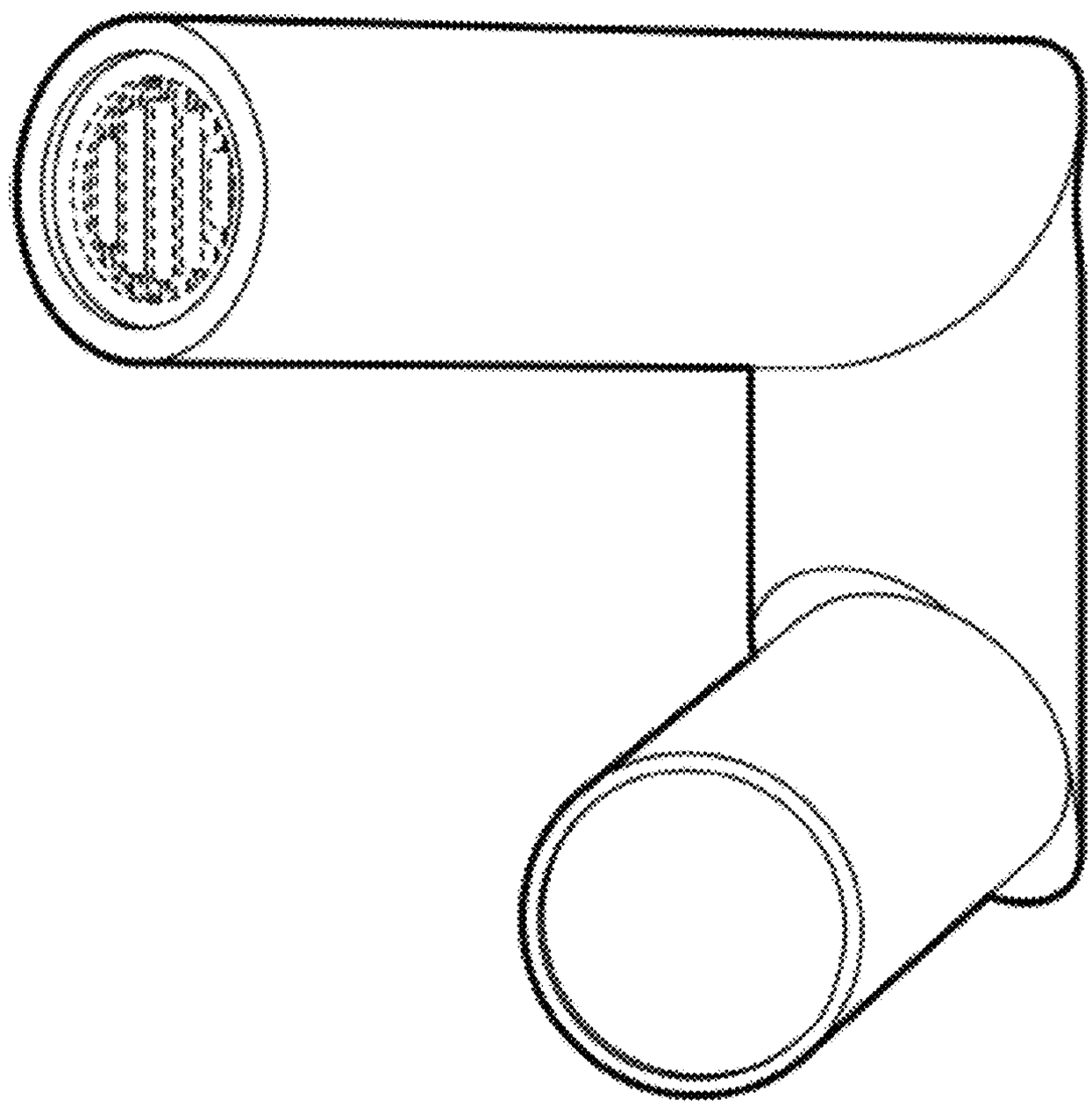

FIG. 20

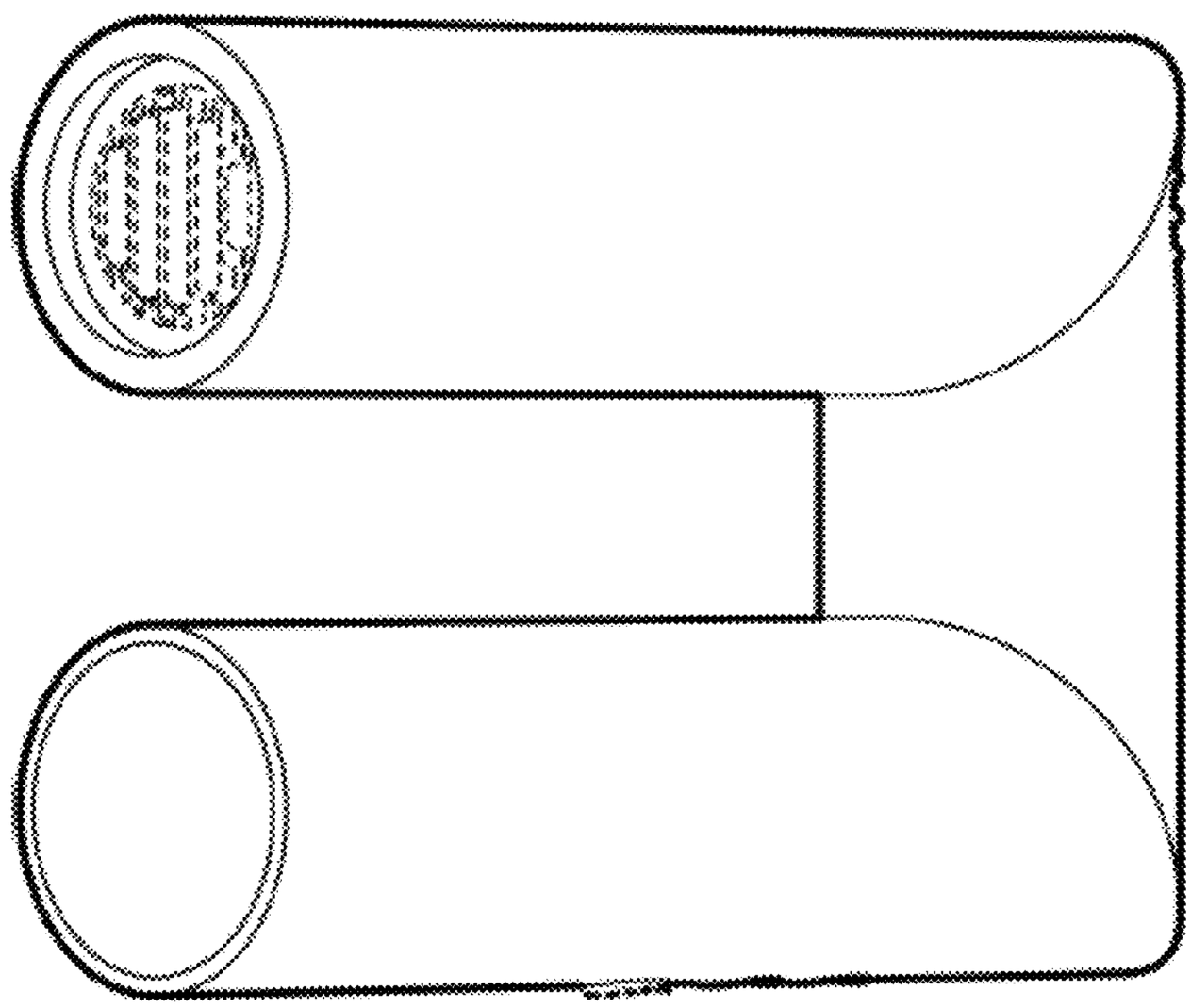

FIG. 21