US00D900106S

(12) United States Design Patent

Green et al.

(10) Patent No.: US D900,106 S
(45) Date of Patent: ** Oct. 27, 2020

(54) **ELECTRONIC DEVICE ADAPTER**

(71) Applicant: **Amazon Technologies, Inc.**, Seattle, WA (US)

(72) Inventors: **Christopher Green**, San Francisco, CA (US); **Marc Rene Walliser**, San Francisco, CA (US); **Matthew Michael Seflic**, San Jose, CA (US)

(73) Assignee: **Amazon Technologies, Inc.**, Seattle, WA (US)

(**) Term: **15 Years**

(21) Appl. No.: **29/692,475**

(22) Filed: **May 24, 2019**

Related U.S. Application Data

(62) Division of application No. 29/609,163, filed on Jun. 28, 2017, now Pat. No. Des. 852,797.

(51) **LOC (12) Cl.** **14-02**

(52) **U.S. Cl.**
USPC **D14/433**

(58) **Field of Classification Search**
USPC D14/356, 432–434, 453, 454, 511, 203.8, D14/209.1, 238.1, 240, 125; 439/638, 439/928, 105, 502; 710/303, 304; 361/679.41, 679.55, 679.56; D13/110, D13/133, 146

(Continued)

(56) **References Cited**

U.S. PATENT DOCUMENTS

D680,539 S 4/2013 Kim
D682,835 S 5/2013 Daniel

(Continued)

OTHER PUBLICATIONS

The Indian Office Action dated Jan. 2, 2018 for Indian design application No. 300141, a counterpart foreign application of Design U.S. Appl. No. 29/609,163.

Primary Examiner — Austin Murphy
(74) *Attorney, Agent, or Firm* — Lee & Hayes, P.C.

(57) **CLAIM**

The ornamental design for an electronic device adapter, as shown and described.

DESCRIPTION

FIG. **1** is a bottom, front perspective view of a first embodiment of an electronic device adapter. The stippled portions of the first embodiment represent textured (e.g., a matte texture) portions of the electronic device adapter;
FIG. **2** is a top, back perspective view thereof. The shading shown on the top surface of the first embodiment represents a high gloss surface of the electronic device adapter;
FIG. **3** is a bottom, back perspective view thereof;
FIG. **4** is a front view thereof;
FIG. **5** is a back view thereof;
FIG. **6** is a left-side view thereof;
FIG. **7** is a right-side view thereof;
FIG. **8** is a top view thereof;
FIG. **9** is a bottom view thereof;
FIG. **10** is a bottom, front perspective view of a second embodiment of an electronic device adapter;
FIG. **11** is a top, back perspective view thereof;
FIG. **12** is a bottom, back perspective view thereof;
FIG. **13** is a front view thereof;
FIG. **14** is a back view thereof;
FIG. **15** is a left-side view thereof;
FIG. **16** is a right-side view thereof;
FIG. **17** is a top view thereof; and,
FIG. **18** is a bottom view thereof.
The dashed broken lines depict portions of the electronic device adapter that form no part of the claimed design.

1 Claim, 18 Drawing Sheets

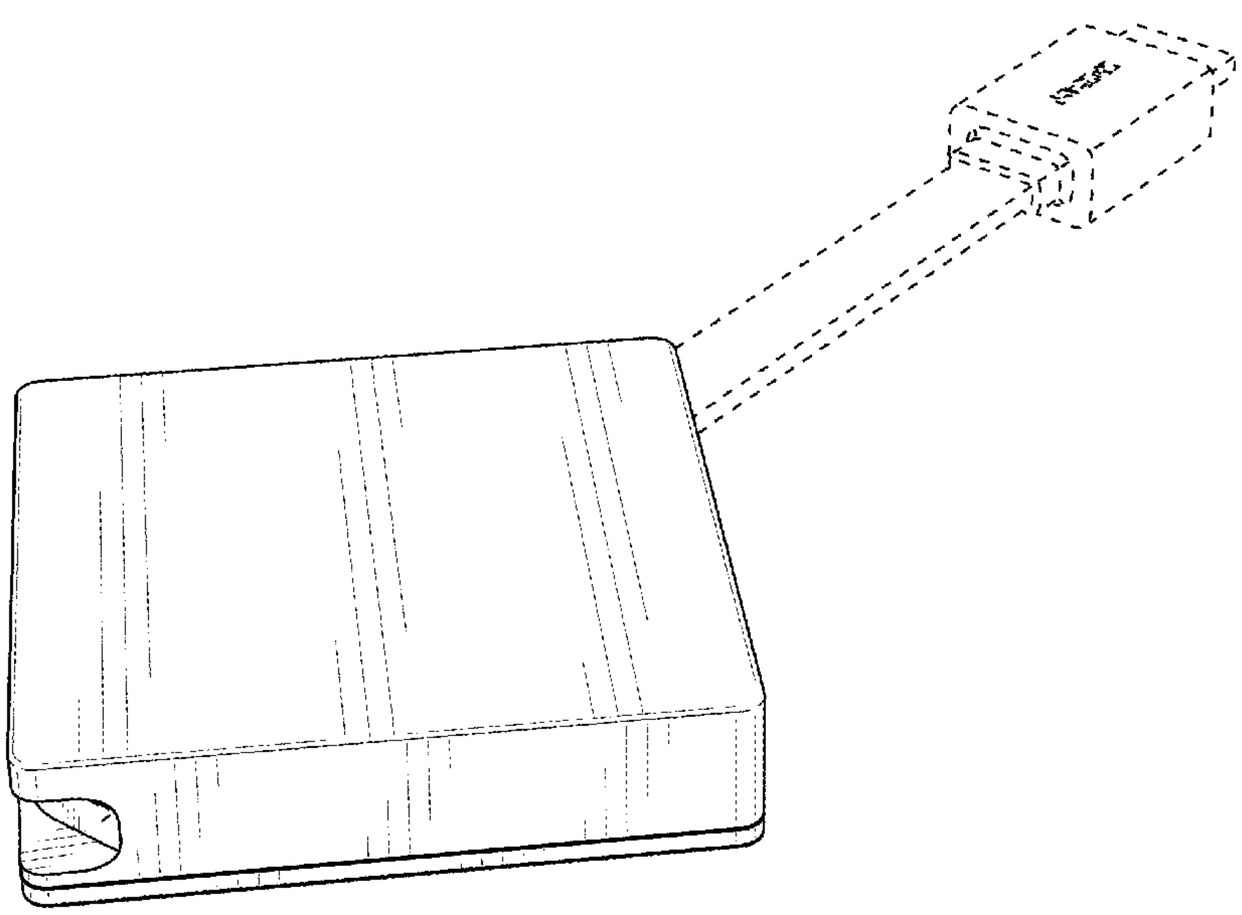

(58) **Field of Classification Search**
CPC ... H04L 12/2832; H04L 12/2838; G06F 3/00; G06F 5/00; G06F 13/14
See application file for complete search history.

(56) **References Cited**

U.S. PATENT DOCUMENTS

D731,489	S		6/2015	Langhammer et al.	
D745,523	S		12/2015	Magi	
D781,294	S		3/2017	Schwalbach et al.	
D784,340	S		4/2017	Laffon de Mazieres et al.	
D798,301	S		9/2017	Kujawski et al.	
D828,356	S		9/2018	Xie	
D828,839	S		9/2018	Zhang	
D828,840	S		9/2018	Zhang	
D828,841	S		9/2018	Zhang	
D830,869	S	*	10/2018	Siminoff	D10/106.1
D832,260	S		10/2018	Hutton et al.	
D832,849	S		11/2018	Kim et al.	
D836,114	S	*	12/2018	Nangeroni	D14/432
D844,006	S	*	3/2019	Molnar	D14/434
D845,953	S	*	4/2019	Boehmer	D14/433
D852,797	S	*	7/2019	Green	D14/433
D852,798	S	*	7/2019	Biddle	D14/433
D854,018	S	*	7/2019	Liao	D14/434
D864,145	S	*	10/2019	Zhang	D14/155
D864,206	S	*	10/2019	Wang	D14/433
D872,078	S	*	1/2020	Wu	D14/358
D876,440	S	*	2/2020	Nangeroni	D14/433
D876,441	S	*	2/2020	Boehmer	D14/433
D879,034	S	*	3/2020	Wu	D13/108

* cited by examiner

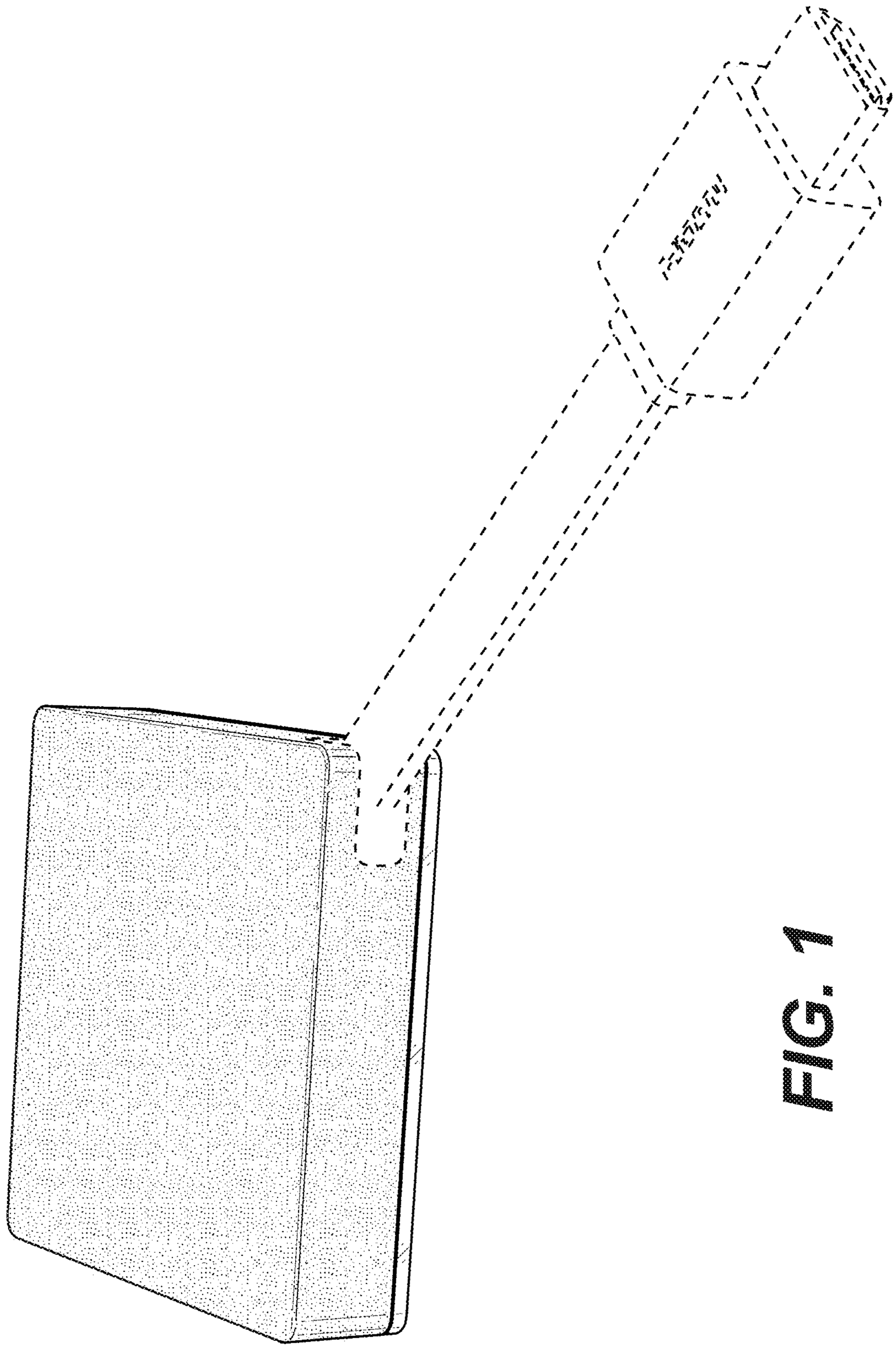

FIG. 1

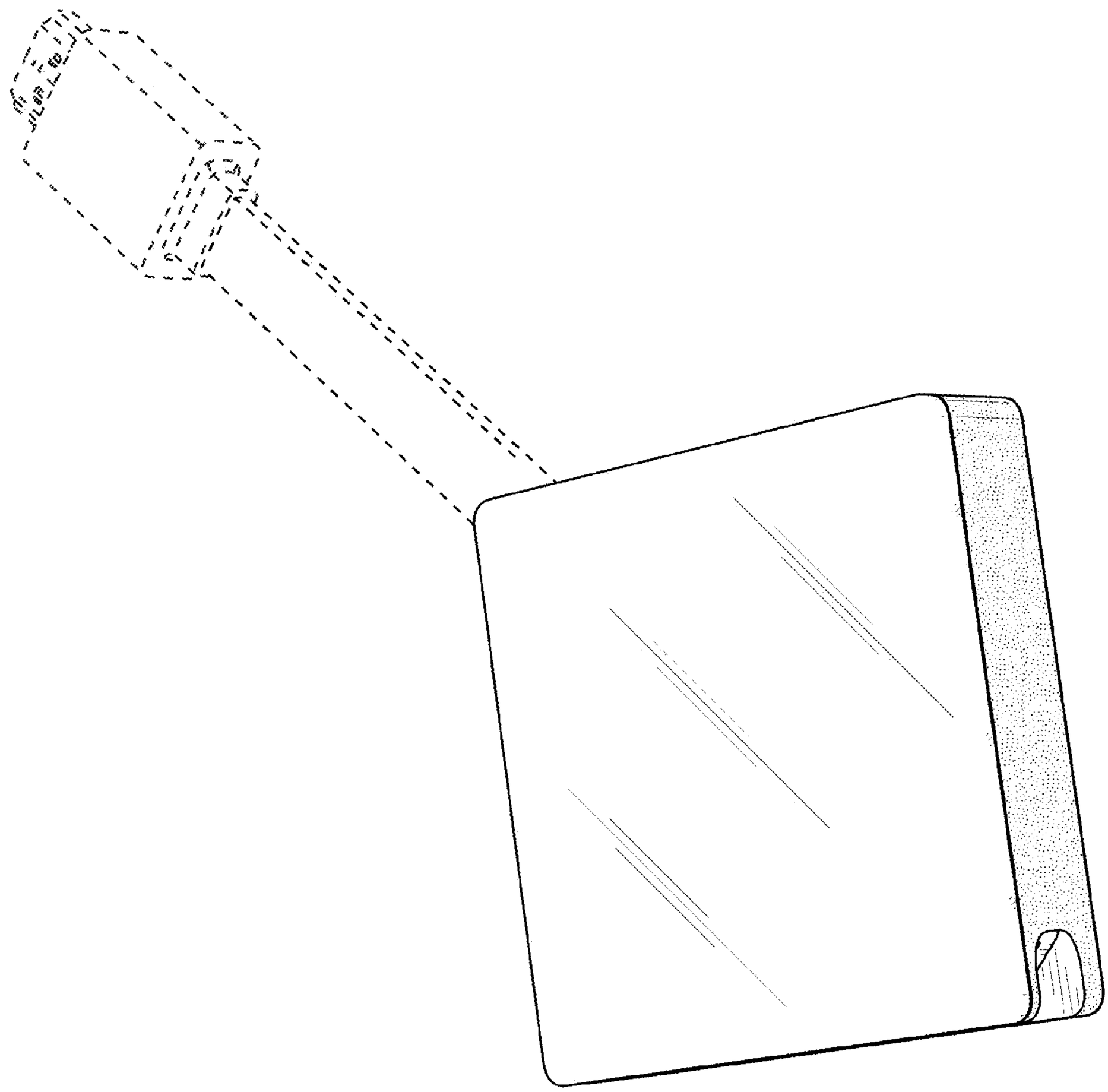

FIG. 2

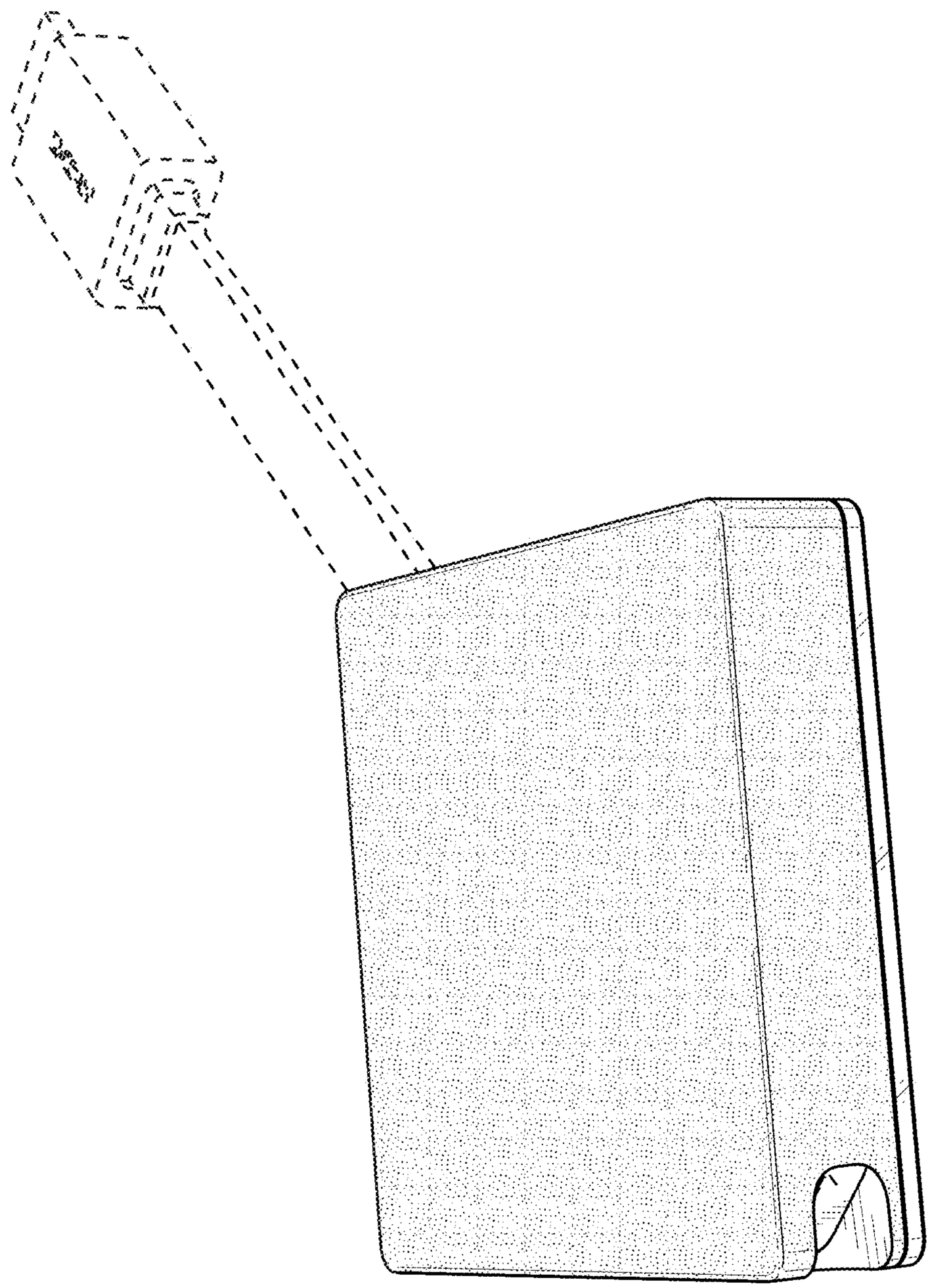

FIG. 3

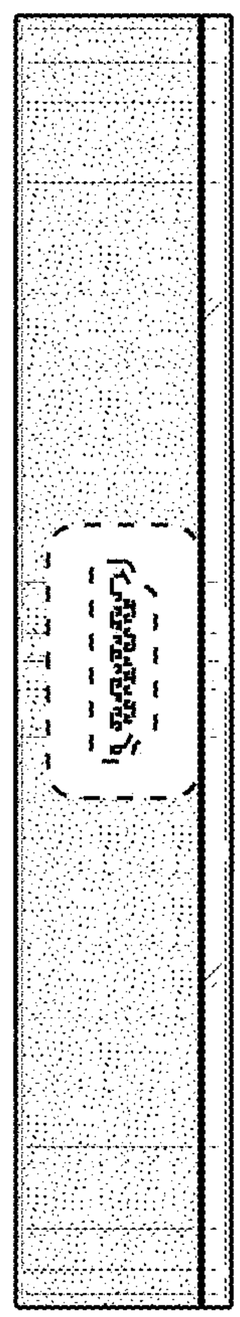

FIG. 4

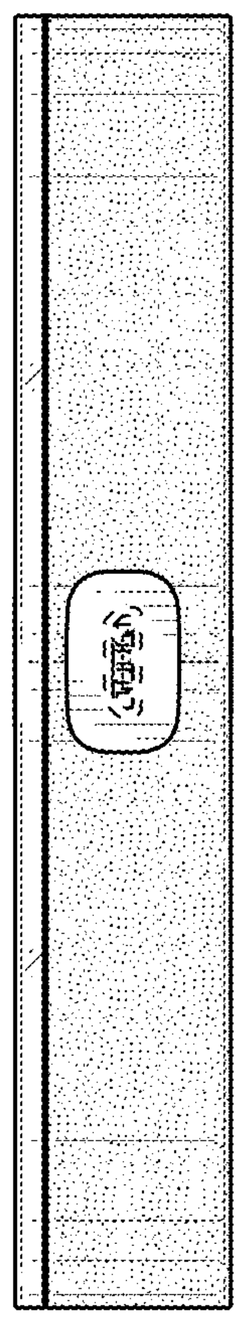

FIG. 5

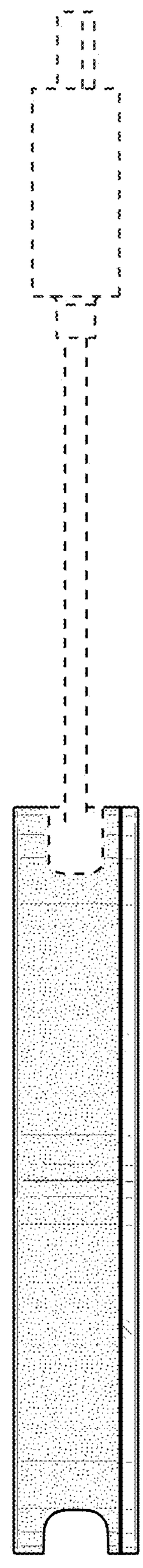

FIG. 6

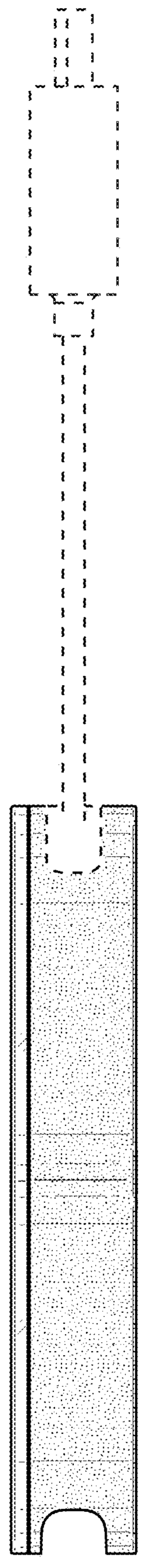

FIG. 7

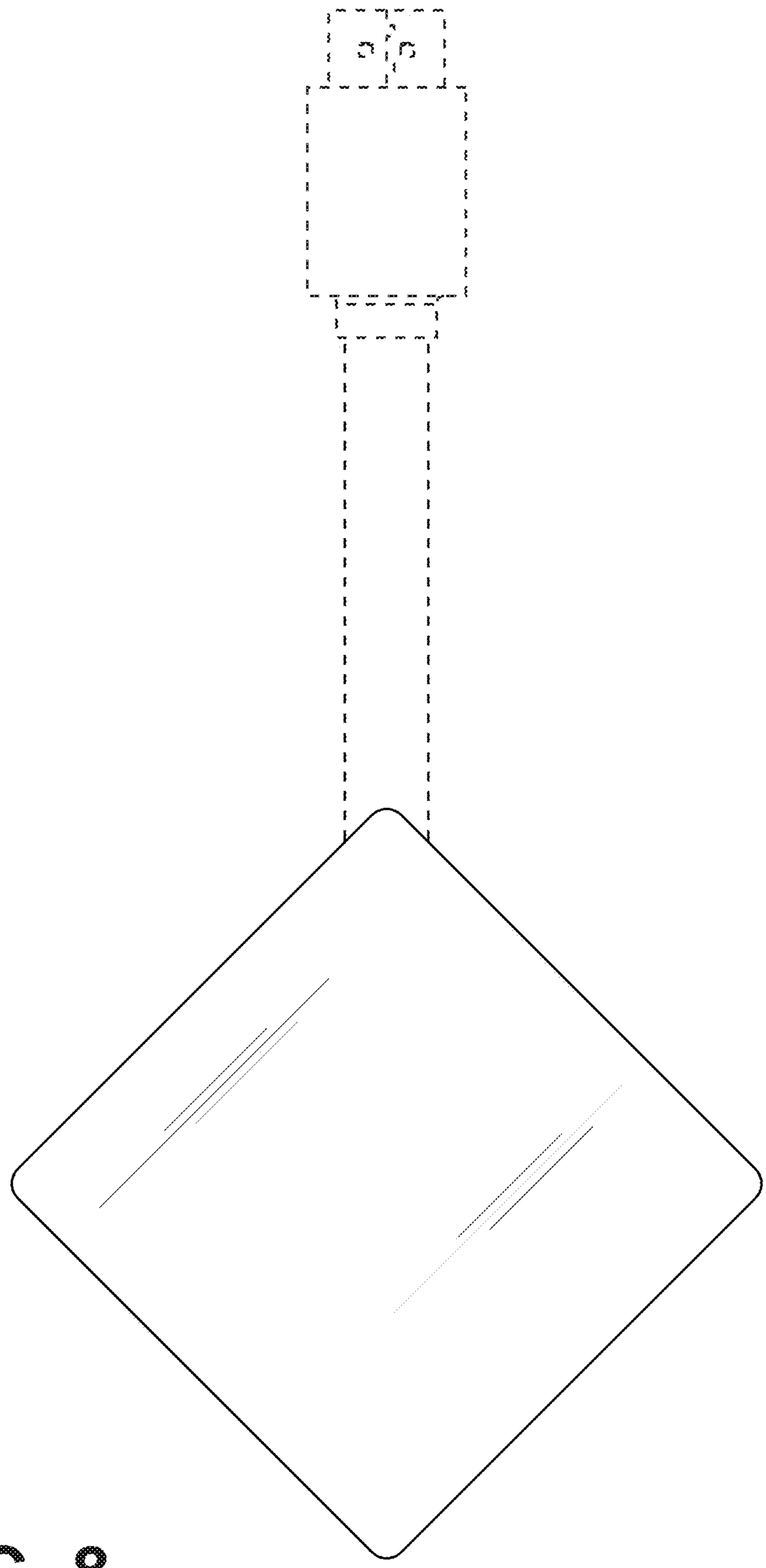

FIG. 8

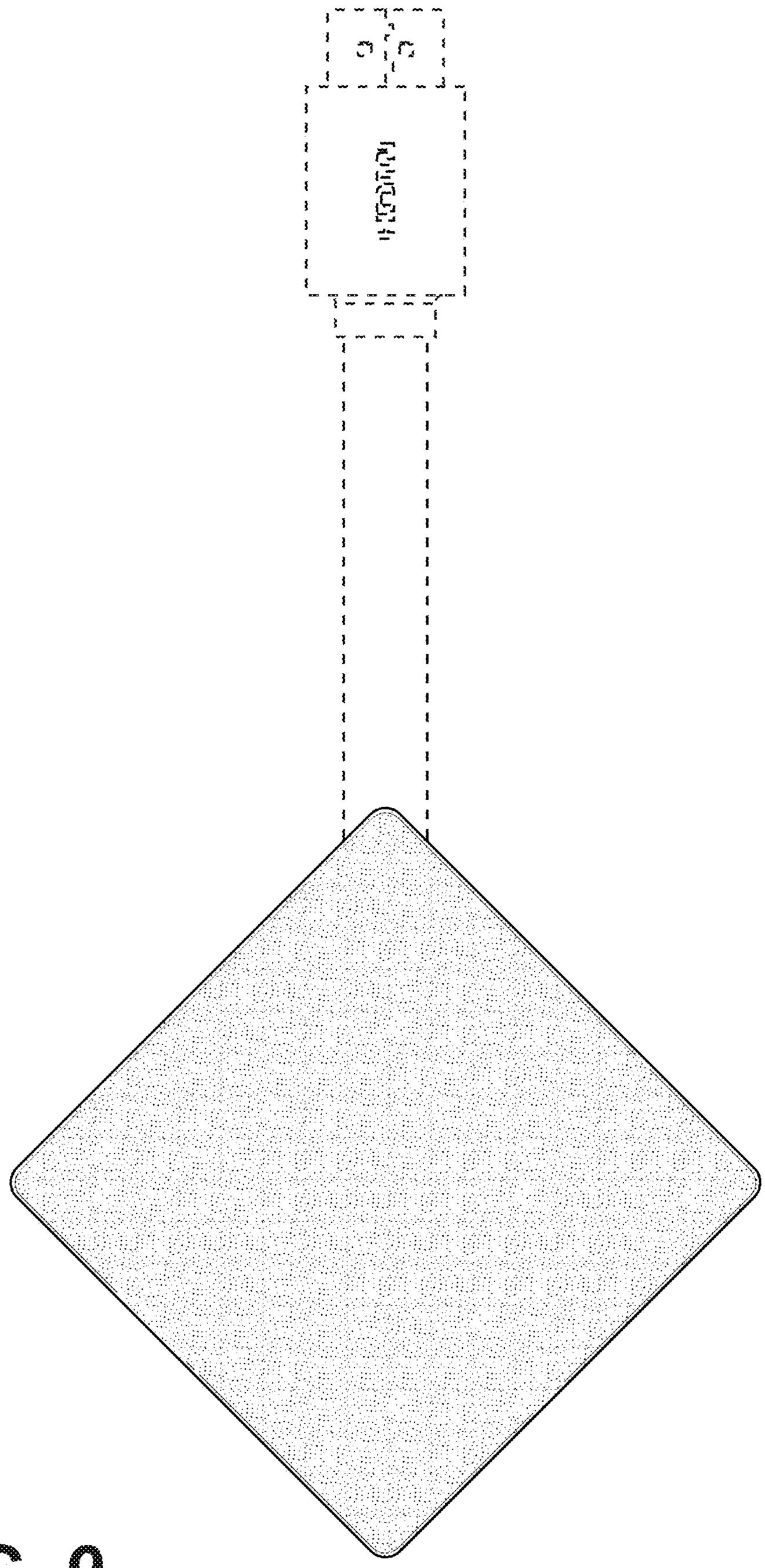

FIG. 9

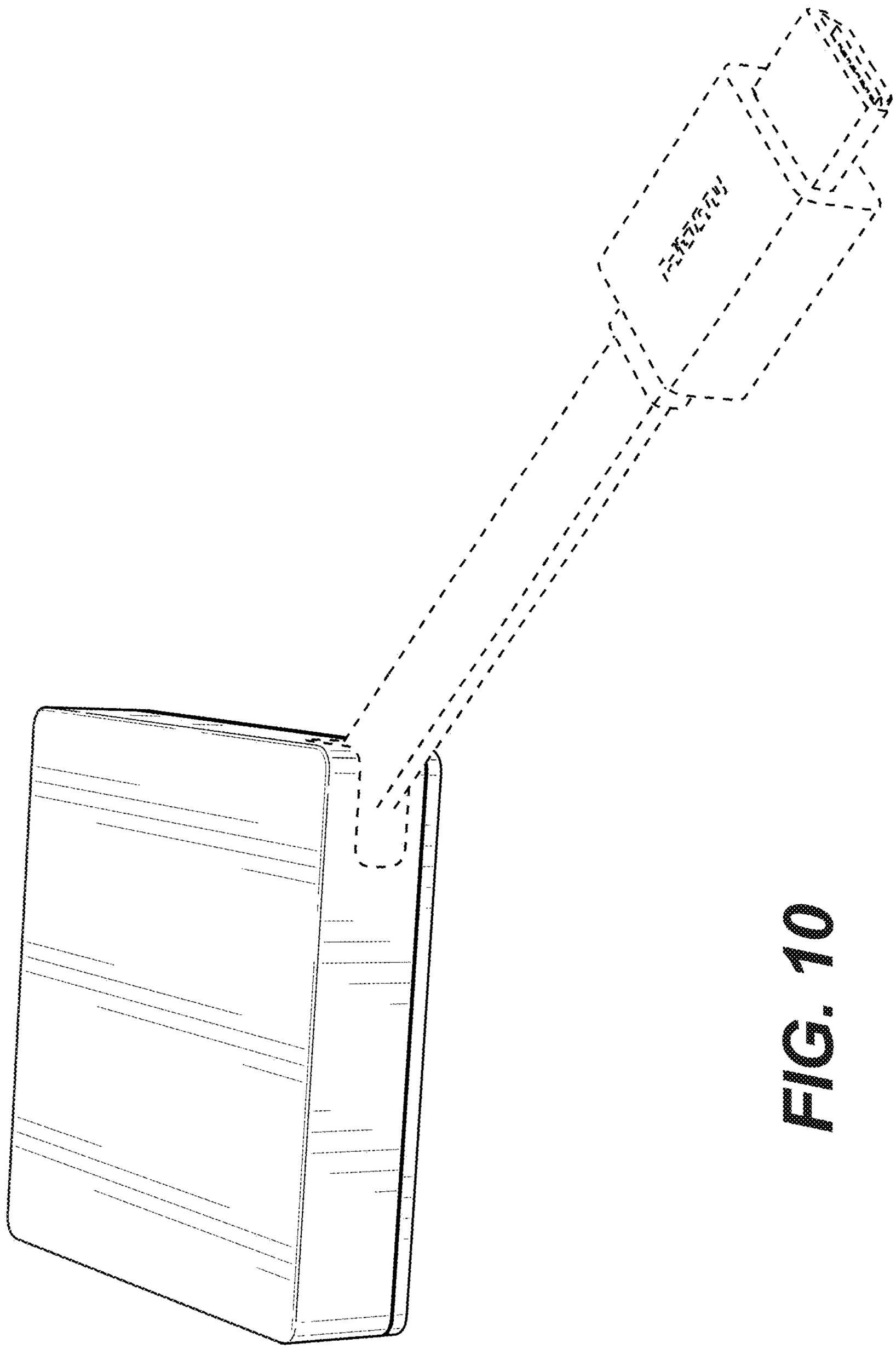

FIG. 10

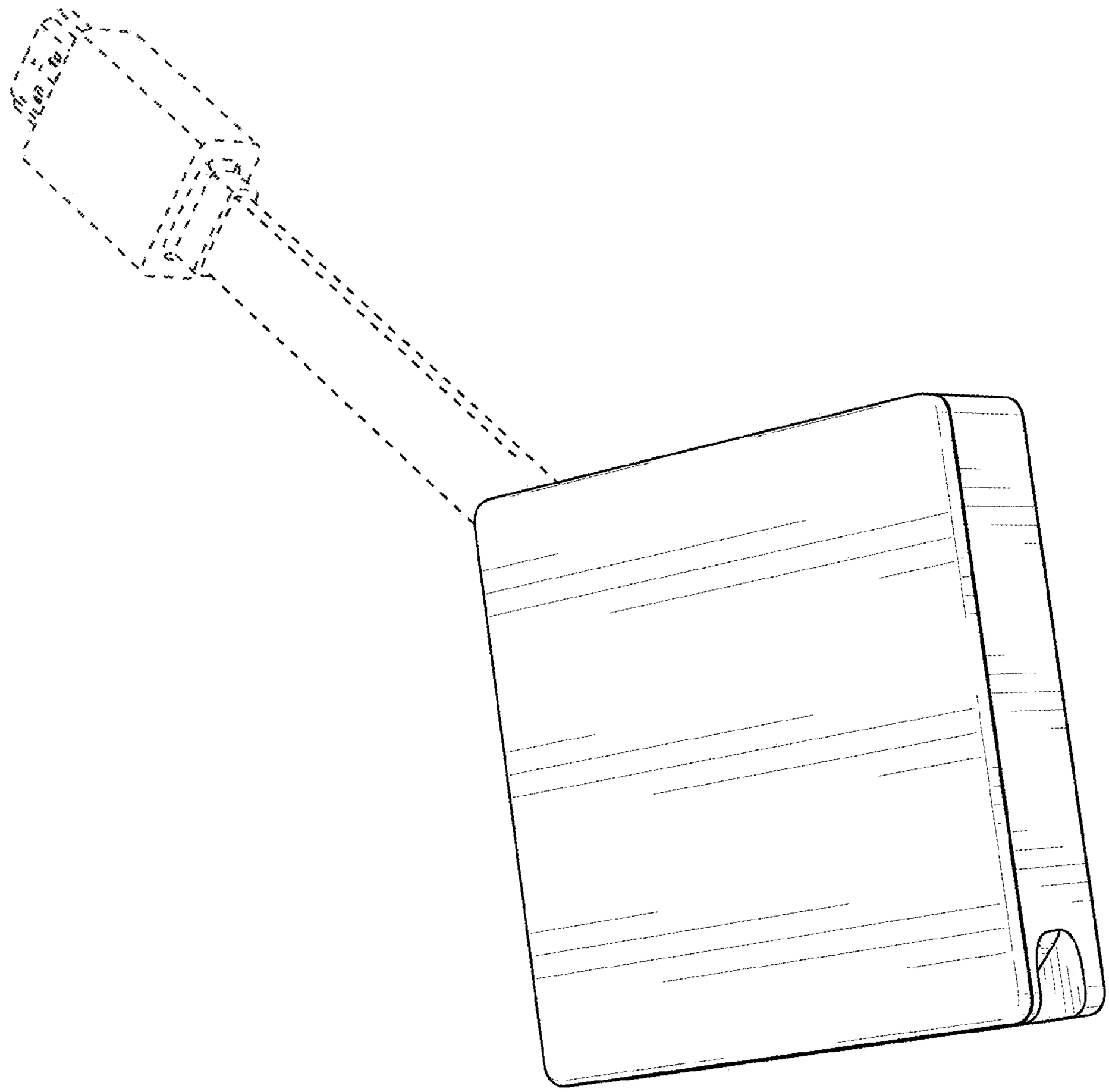

FIG. 11

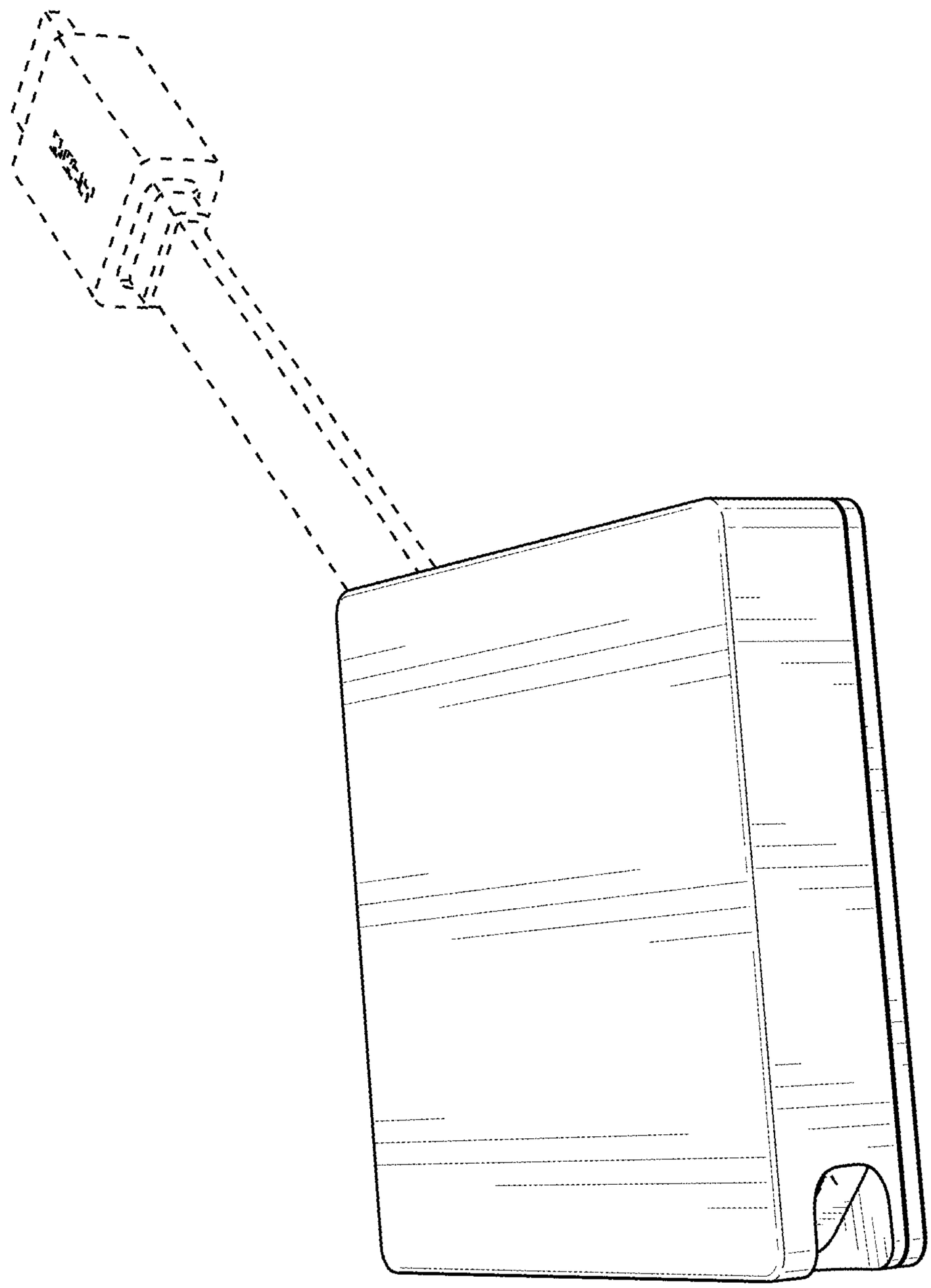

FIG. 12

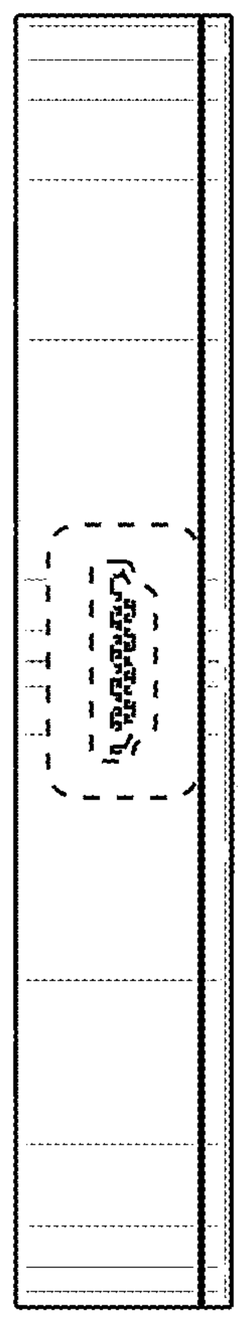

FIG. 13

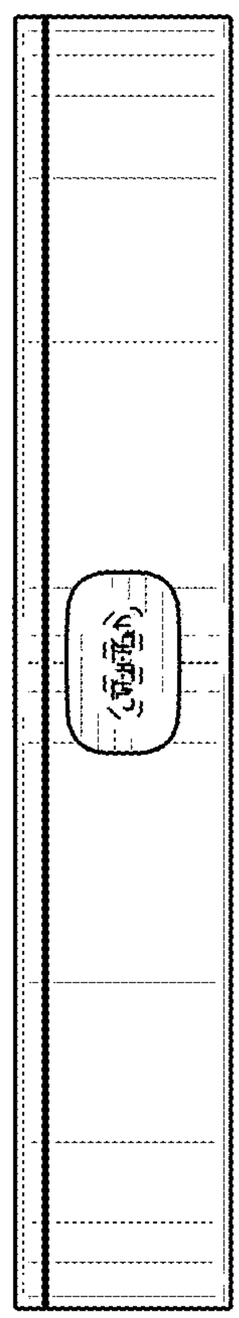

FIG. 14

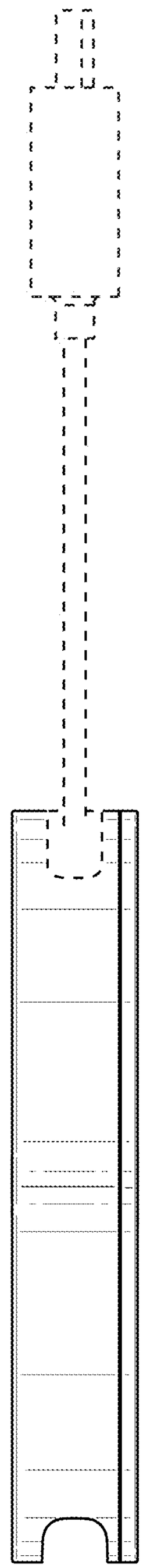

FIG. 15

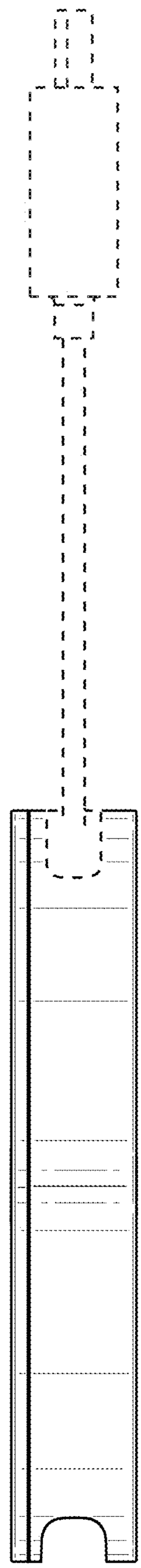

FIG. 16

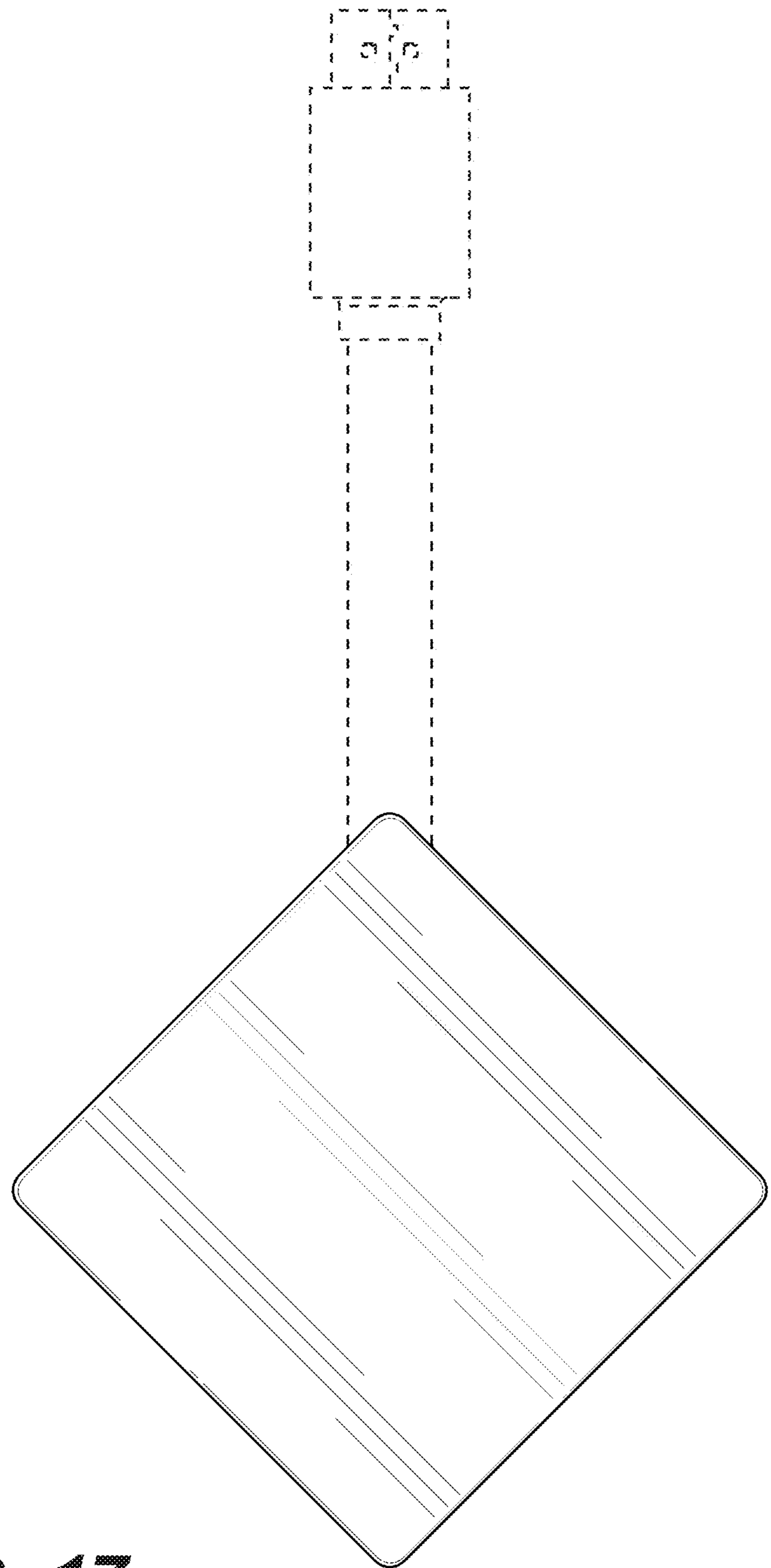

FIG. 17

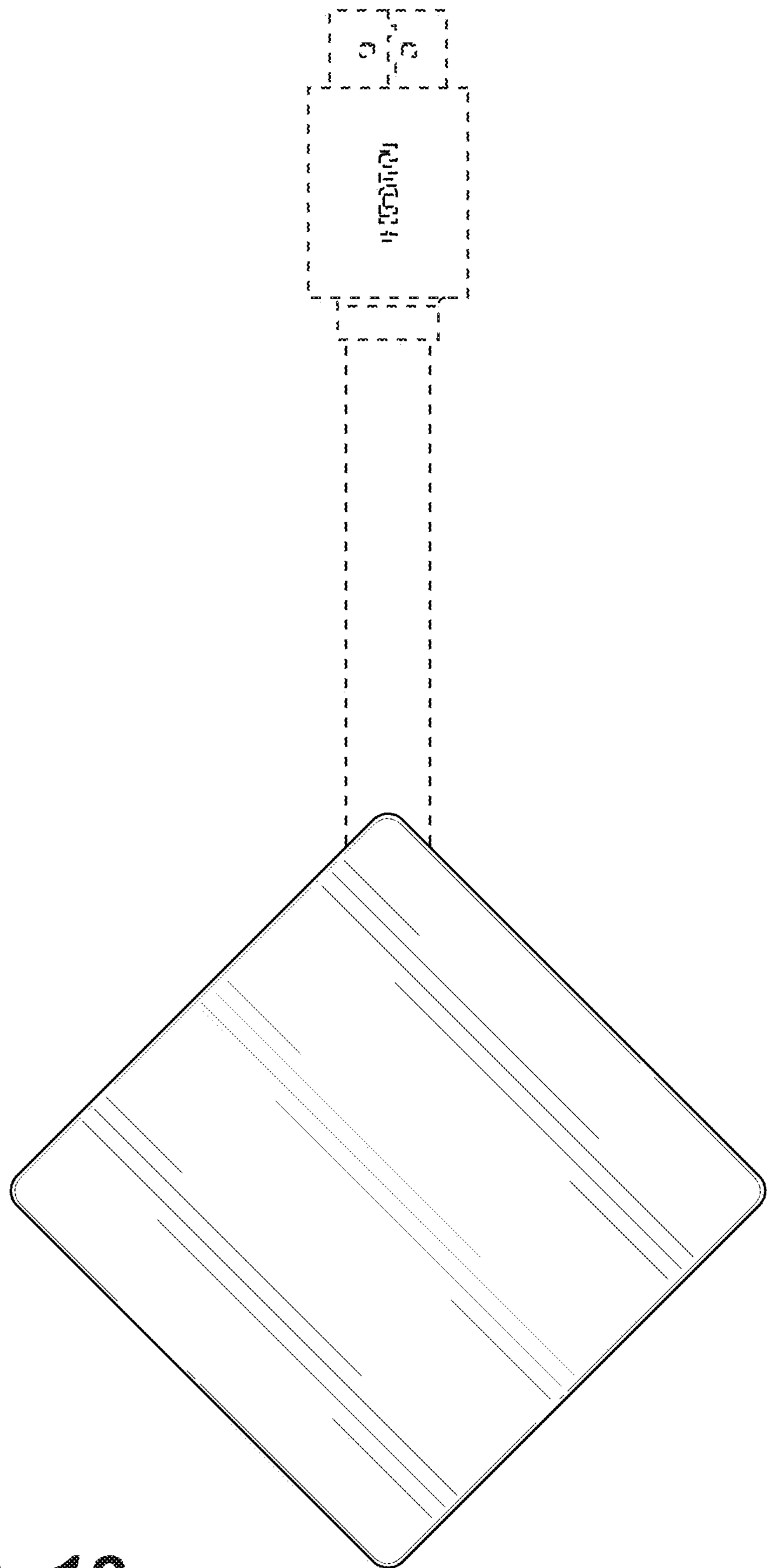

FIG. 18