US00D900068S

(12) United States Design Patent

Murata

(10) Patent No.: US D900,068 S
(45) Date of Patent: ** Oct. 27, 2020

(54) **MICROPHONE**

(71) Applicant: **Audio-Technica Corporation**, Tokyo (JP)

(72) Inventor: **Takashi Murata**, Tokyo (JP)

(73) Assignee: **Audio-Technica Corporation**, Tokyo (JP)

(**) Term: **15 Years**

(21) Appl. No.: **29/665,625**

(22) Filed: **Oct. 5, 2018**

(30) **Foreign Application Priority Data**

Apr. 6, 2018 (JP) 2018-007630

(51) **LOC (12) Cl.** **14-01**

(52) **U.S. Cl.**
USPC **D14/225**

(58) **Field of Classification Search**
USPC D14/221, 224, 225, 226, 227, 228, 229, D14/150, 154, 155, 158, 160, 172
CPC H04R 19/04; H04R 19/00; H04R 1/406; H04R 1/08; H04R 1/04; H04R 1/326; H04R 29/004; H04R 2410/00; H04R 2410/01; H04R 2410/03; H04R 2410/05; H04R 2410/07; H04R 2420/07; H04R 17/02
See application file for complete search history.

(56) **References Cited**

U.S. PATENT DOCUMENTS

D264,587 S * 5/1982 Lowe D14/206
D529,902 S * 10/2006 Tan D14/225
D620,482 S * 7/2010 Chen D14/225
D791,107 S * 7/2017 Goltche D14/225
D830,339 S * 10/2018 Yan D14/206
D835,080 S * 12/2018 Chen D14/226
D851,629 S * 6/2019 Summerson D14/206
D853,988 S * 7/2019 Wang D14/206
D865,708 S * 11/2019 Lee D14/206
D868,734 S * 12/2019 Wang D14/206
D877,116 S * 3/2020 Liu D14/206
2006/0159256 A1* 7/2006 Akino H04M 1/03 379/430
2007/0269073 A1* 11/2007 Huang H04R 1/1016 381/380

(Continued)

OTHER PUBLICATIONS

Audio-Technica BPHS2 Broadcast Headset Microphone, announced © 1996-2020 [online], retrieved Mar. 11, 2020, retrieved from internet, https://www.zzounds.com/item--AUTBPHS2.*

Primary Examiner — Dana K Weiland
Assistant Examiner — Messina L Smith
(74) *Attorney, Agent, or Firm* — W&C IP

(57) **CLAIM**

The ornamental design for a microphone, as shown and described.

DESCRIPTION

FIG. **1** is a front perspective view of a microphone, showing my new design;
FIG. **2** is a rear perspective view of the microphone;
FIG. **3** is a front elevational view of the microphone;
FIG. **4** is a rear elevational view of the microphone;
FIG. **5** is a top plan view of the microphone;
FIG. **6** is a bottom plan view of the microphone;
FIG. **7** is a left side elevational view of the microphone;
FIG. **8** is a right side elevational view of the microphone; and,
FIG. **9** is a perspective view of the microphone, shown in an environment of use.
The broken line showing of the headset in FIG. **9** depicts environment and forms no part of the claimed design. All other broken lines depict portions of the microphone that form no part of the claimed design.

1 Claim, 9 Drawing Sheets

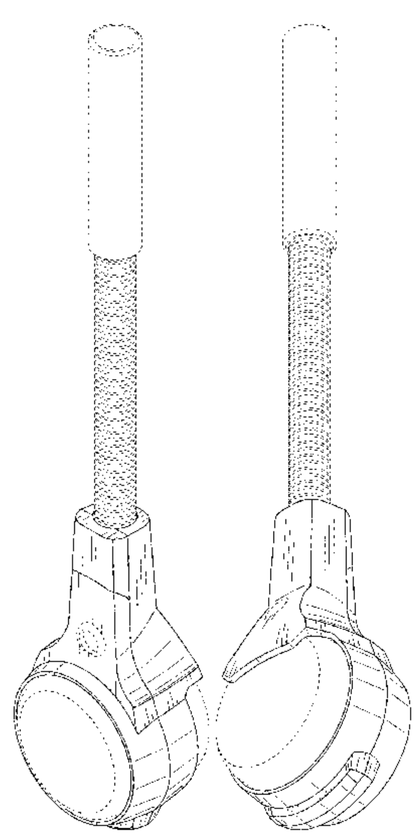

(56) **References Cited**

U.S. PATENT DOCUMENTS

2008/0049960 A1* 2/2008 Petersen H04R 1/083
381/375

* cited by examiner

FIG. 1

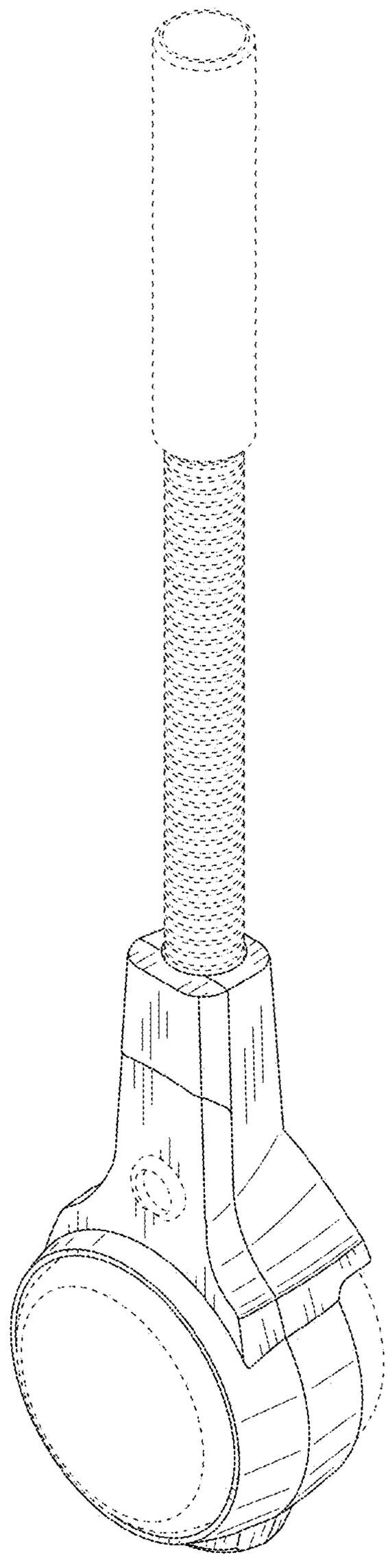

FIG. 2

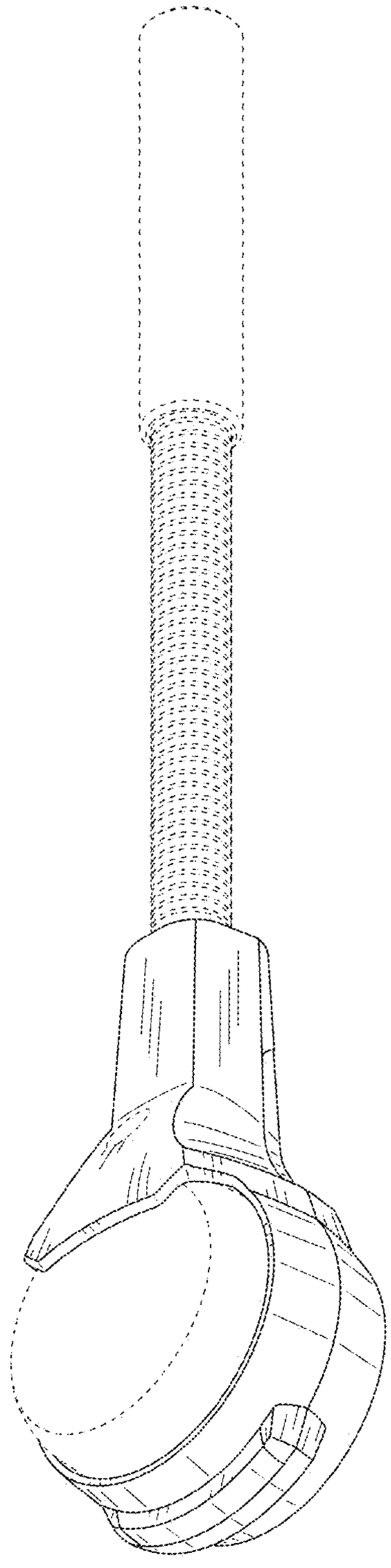

FIG. 3

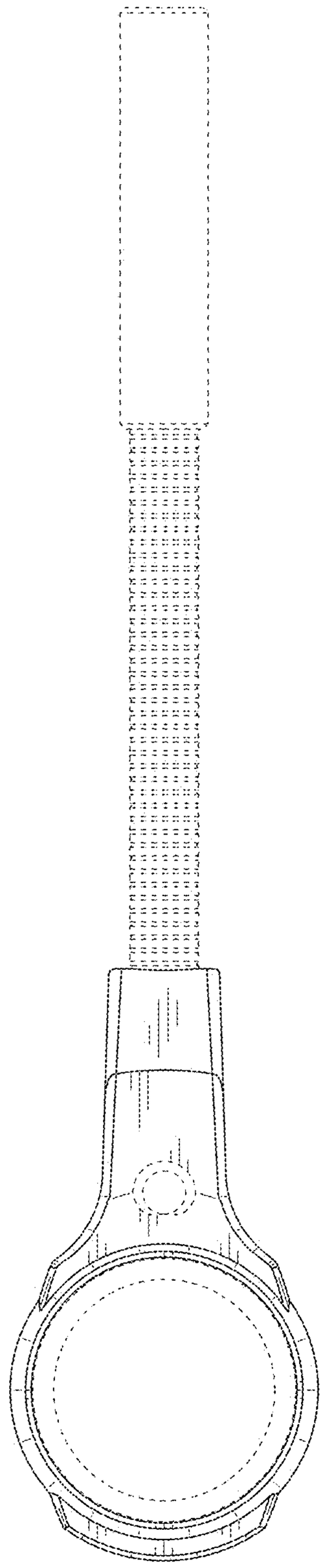

FIG. 4

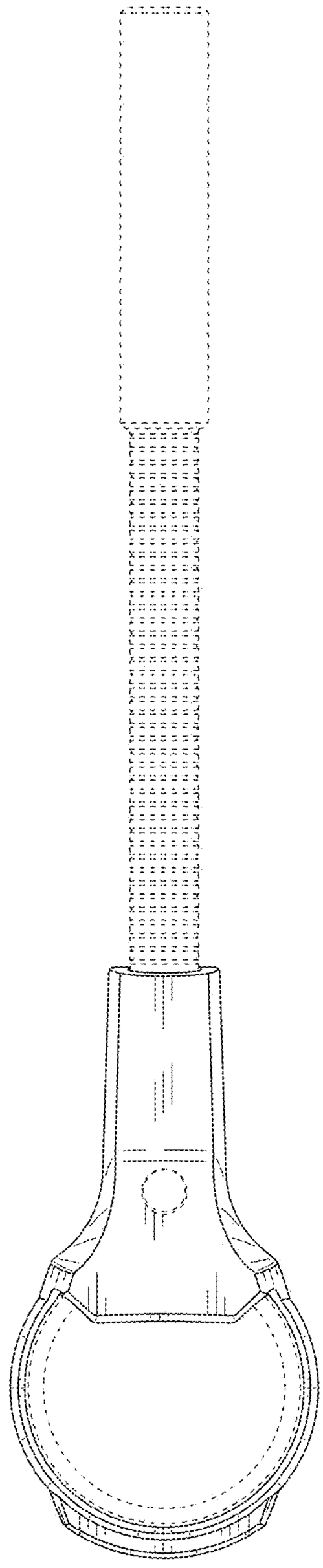

FIG. 5

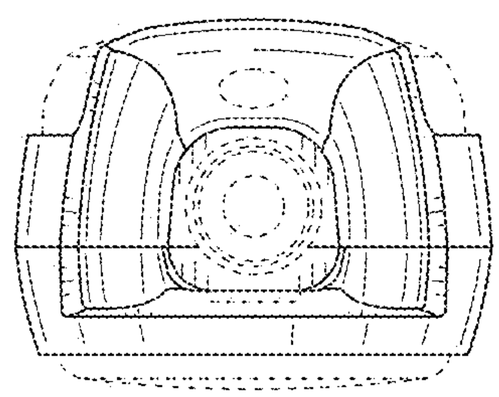

FIG. 6

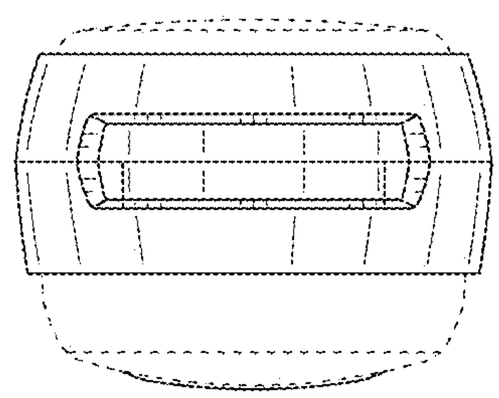

FIG. 7

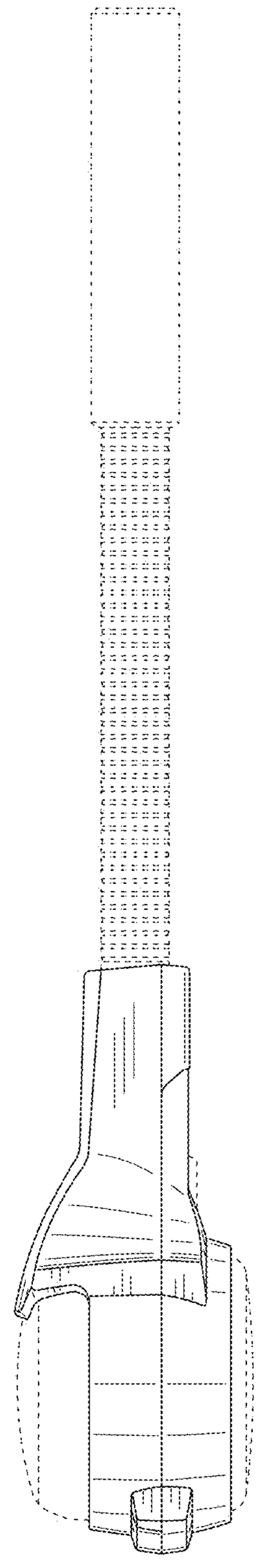

FIG. 8

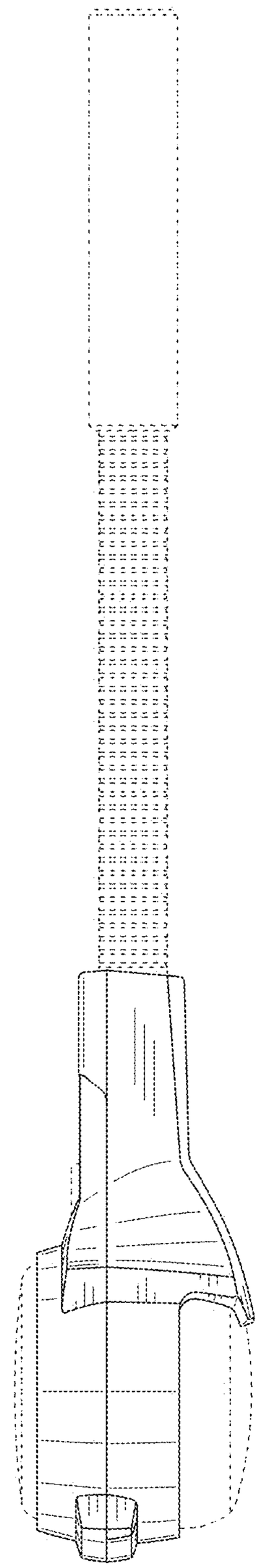
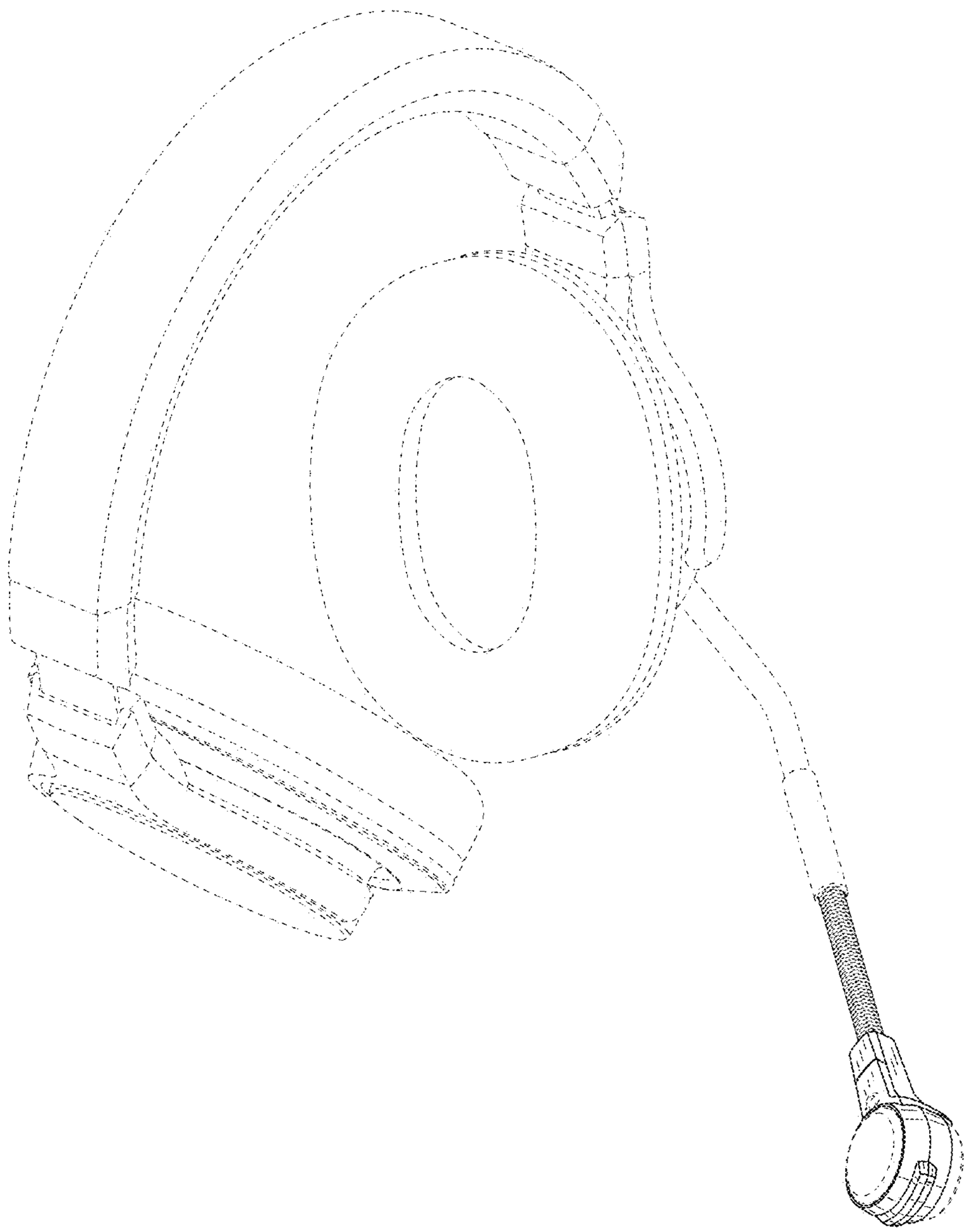
FIG. 9