US00D899953S

# (12) United States Design Patent

Rainer

(10) Patent No.: US D899,953 S
(45) Date of Patent: ** Oct. 27, 2020

(54) **MINIATURE INLINE SENSING DEVICE FOR CONTINUOUS MEASUREMENT OF FLUID PROPERTIES**

(71) Applicant: **The Mercury Iron and Steel Co.**, Solon, OH (US)

(72) Inventor: **Michael D. Rainer**, Burton, OH (US)

(73) Assignee: **The Mercury Iron and Steel Co.**, Solon, OH (US)

(**) Term: **15 Years**

(21) Appl. No.: **29/653,799**

(22) Filed: **Jun. 19, 2018**

(51) **LOC (12) Cl.** ..... **10-04**

(52) **U.S. Cl.**
USPC ..... **D10/81**

(58) **Field of Classification Search**
USPC ..... D10/81, 96
CPC ... G01F 1/00; G01F 1/007; G01F 1/07; G01F 1/74
See application file for complete search history.

(56) **References Cited**

U.S. PATENT DOCUMENTS

| | | | | |
|---|---|---|---|---|
| D653,136 | S | * | 1/2012 | Rainer ..... D10/96 |
| D668,167 | S | * | 10/2012 | Rainer ..... D10/96 |
| D668,570 | S | * | 10/2012 | Rainer ..... D10/96 |
| D686,929 | S | * | 7/2013 | Rainer ..... D10/96 |
| D686,930 | S | | 7/2013 | Rainer et al. |
| D687,730 | S | * | 8/2013 | Fukano ..... D10/96 |
| 8,528,399 | B2 | * | 9/2013 | Rainer ..... G01N 21/41 73/204.11 |
| D696,972 | S | | 1/2014 | Rainer et al. |

(Continued)

OTHER PUBLICATIONS

Rainer, Michael D.; Design U.S. Appl. No. 29/653,800, entitled Device with Integrated Sensor for Incorporation Into Fluid Measurement System, filed Jun. 19, 2018; in its entirety.

(Continued)

*Primary Examiner* — Lilyana Bekic
(74) *Attorney, Agent, or Firm* — Ulmer & Berne LLP

(57) **CLAIM**

The ornamental design for a miniature inline sensing device for continuous measurement of fluid properties, as shown and described.

**DESCRIPTION**

FIG. **1** is a front top perspective view of the miniature inline sensing device for continuous measurement of fluid properties;
FIG. **2** is a front elevational view of the miniature inline sensing device for continuous measurement of fluid properties of FIG. **1**;
FIG. **3** is a rear elevational view of the miniature inline sensing device for continuous measurement of fluid properties of FIG. **1**;
FIG. **4** is a right side elevational view of the miniature inline sensing device for continuous measurement of fluid properties of FIG. **1**;
FIG. **5** is a left side elevational view of the miniature inline sensing device for continuous measurement of fluid properties of FIG. **1**;
FIG. **6** is a top plan view of the miniature inline sensing device for continuous measurement of fluid properties of FIG. **1**;
FIG. **7** is a bottom plan view of the miniature inline sensing device for continuous measurement of fluid properties of FIG. **1**; and,
FIG. **8** is a rear bottom perspective view of the miniature inline sensing device for continuous measurement of fluid properties of FIG. **1**.
The broken-line disclosure of elements is understood to represent portions of the article in which the design is embodied, but which form no part of the claimed design.

**1 Claim, 7 Drawing Sheets**

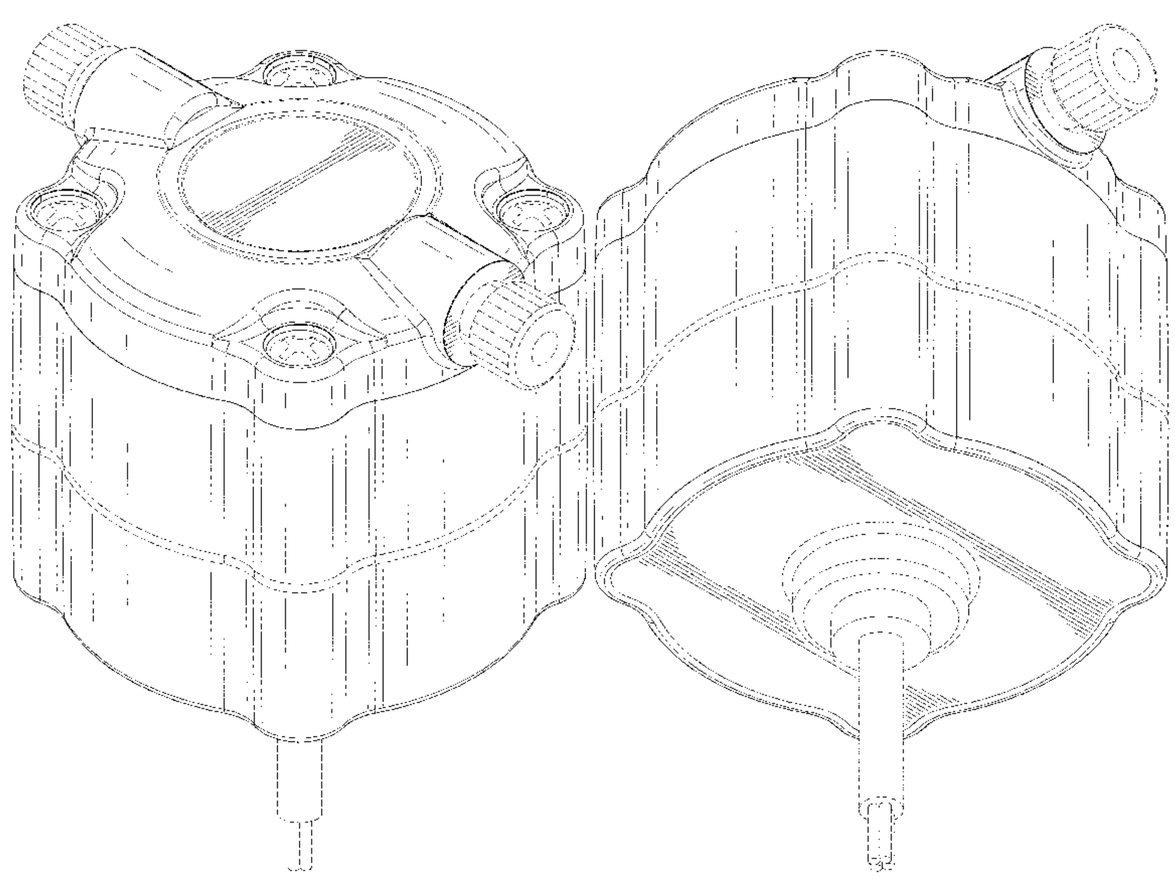

(56) **References Cited**

U.S. PATENT DOCUMENTS

| | | | | | |
|---|---|---|---|---|---|
| D704,082 | S | | 5/2014 | Rainer et al. | |
| D809,949 | S | * | 2/2018 | Tabata | D10/96 |
| D828,195 | S | * | 9/2018 | Tschudin | D10/96 |
| D828,196 | S | * | 9/2018 | Tschudin | D10/96 |
| D828,197 | S | * | 9/2018 | Tschudin | D10/96 |
| D831,518 | S | * | 10/2018 | Tschudin | D10/96 |
| D834,435 | S | | 11/2018 | Raghukumar | |
| D863,087 | S | * | 10/2019 | Henrich | D10/96 |
| D863,998 | S | * | 10/2019 | Rainer | D10/81 |
| D863,999 | S | * | 10/2019 | Rainer | D10/81 |
| 2012/0118058 | A1 | * | 5/2012 | Rainer | G01N 21/41 73/204.11 |

OTHER PUBLICATIONS

Davis, Antoine; Notice of Allowance and Fee(s) Due, issued in Design U.S. Appl. No. 29/653,800; dated Jul. 10, 2019; 6 pages.

* cited by examiner

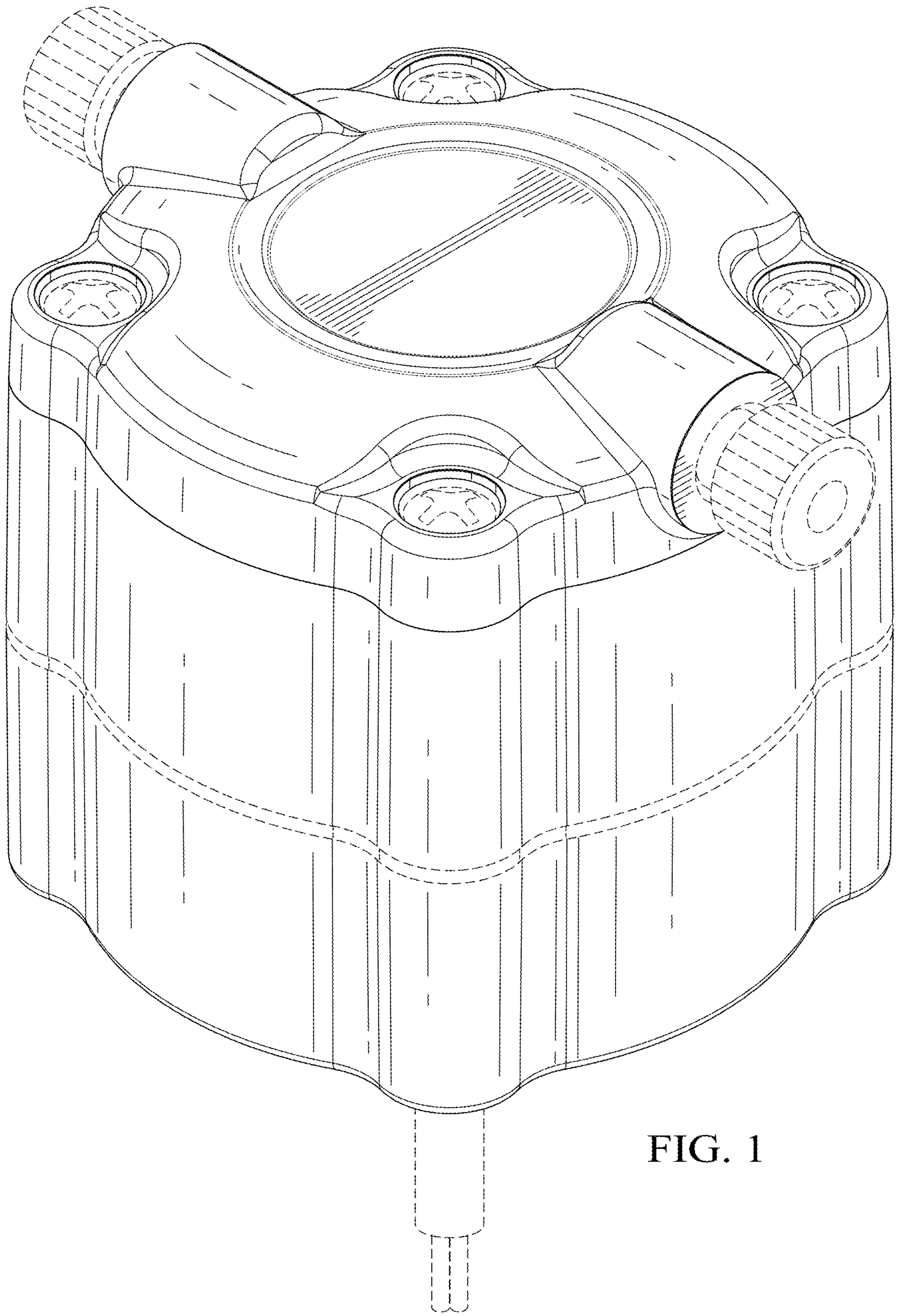

FIG. 1

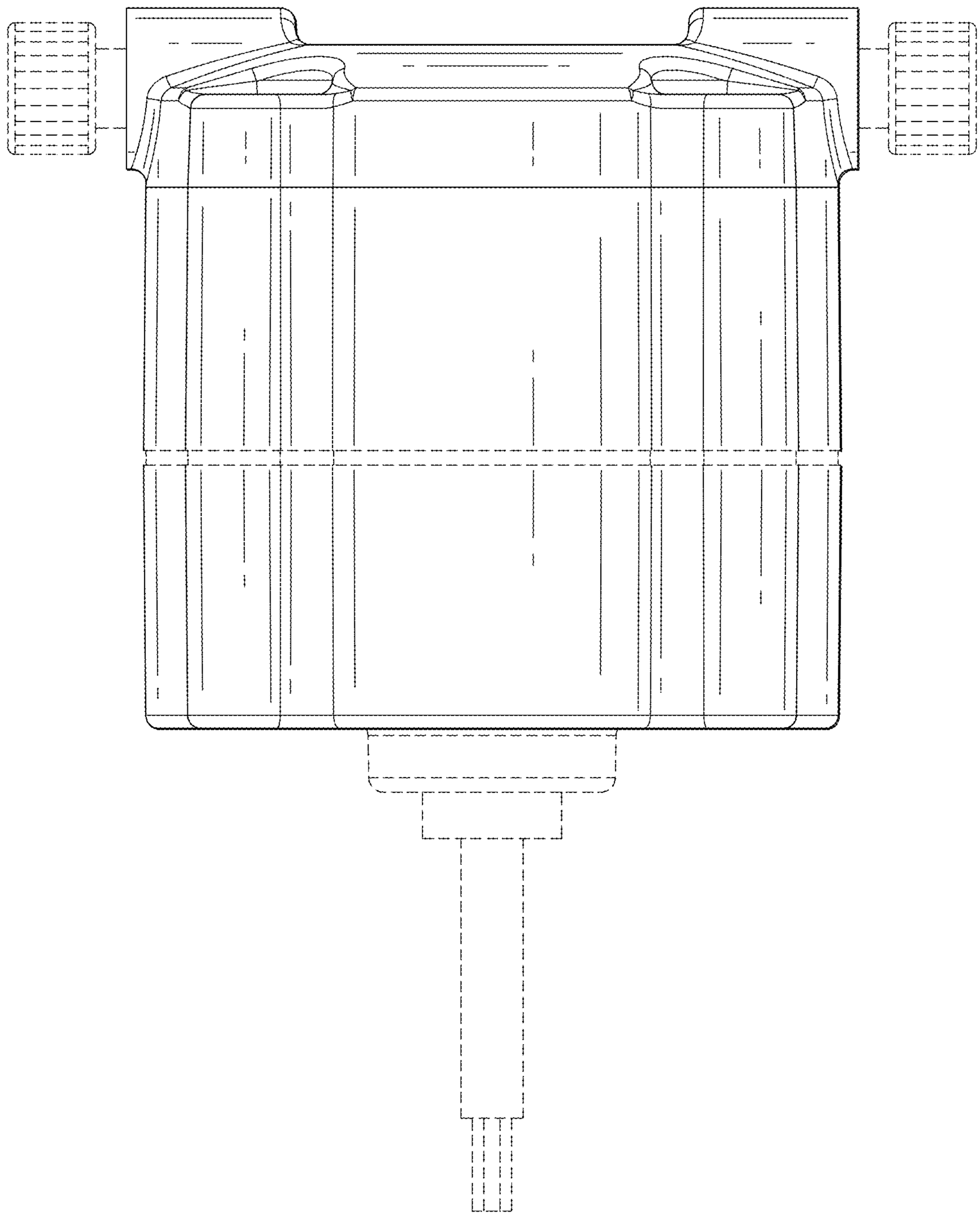

FIG. 2

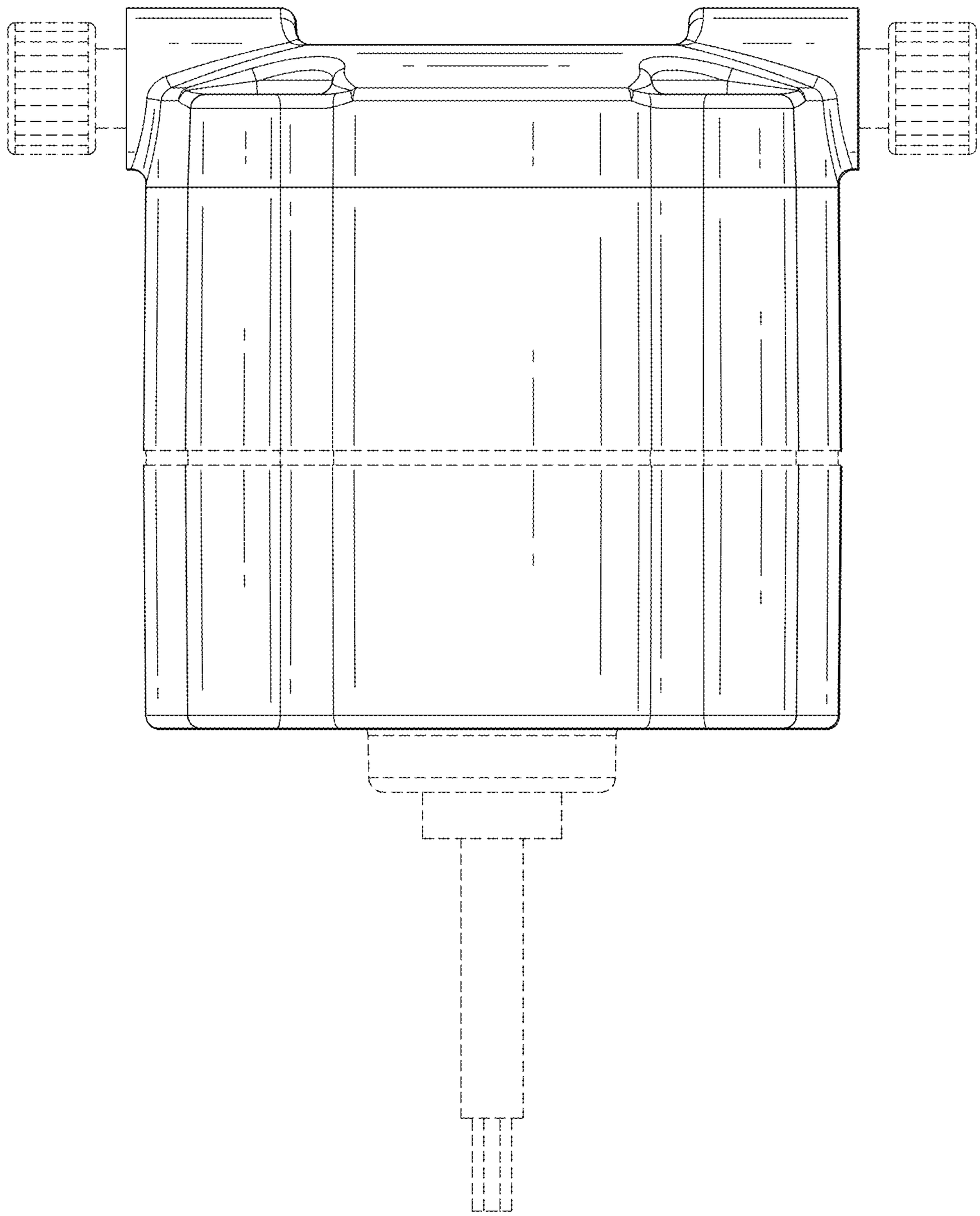

FIG. 3

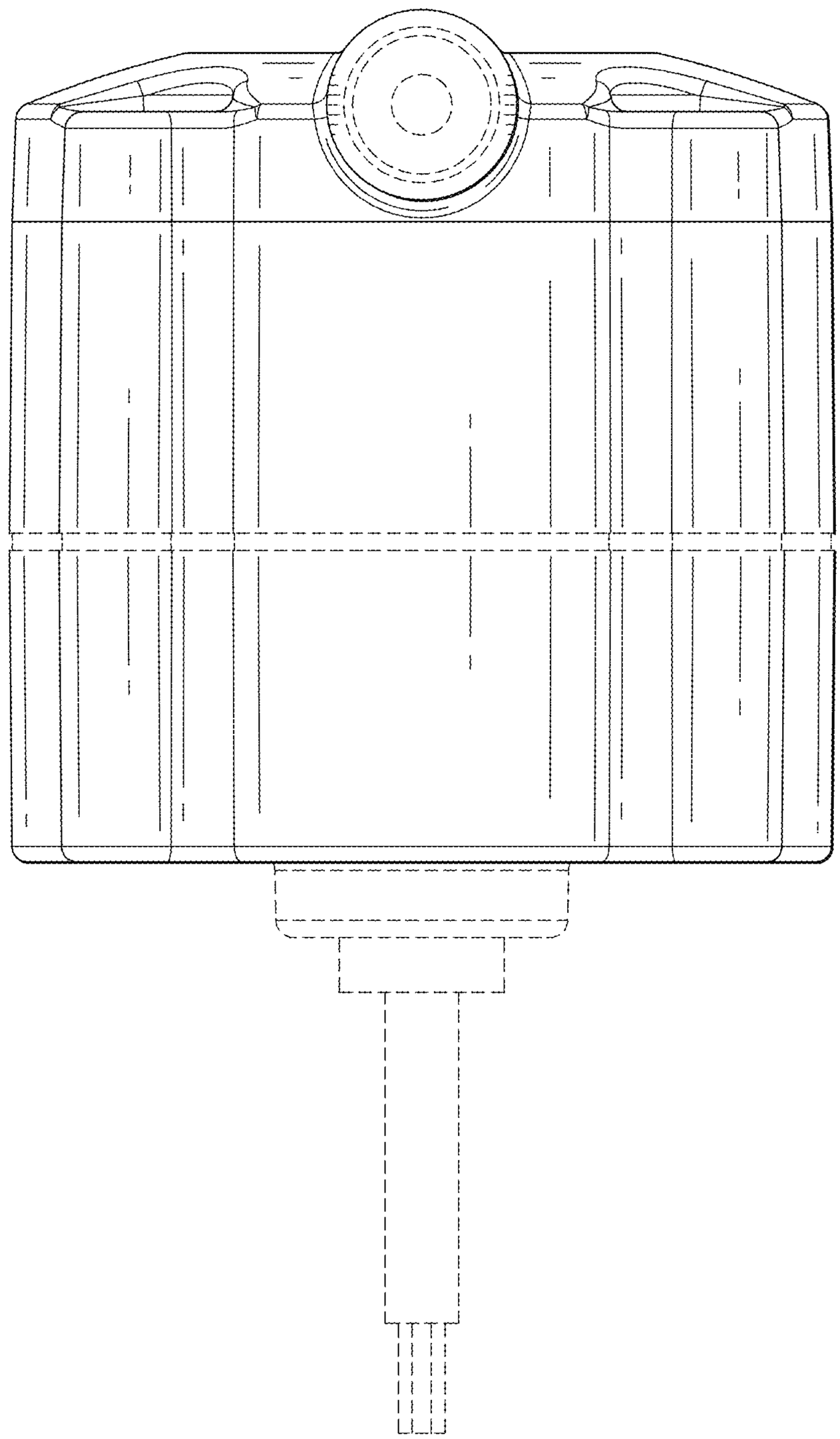

FIG. 4

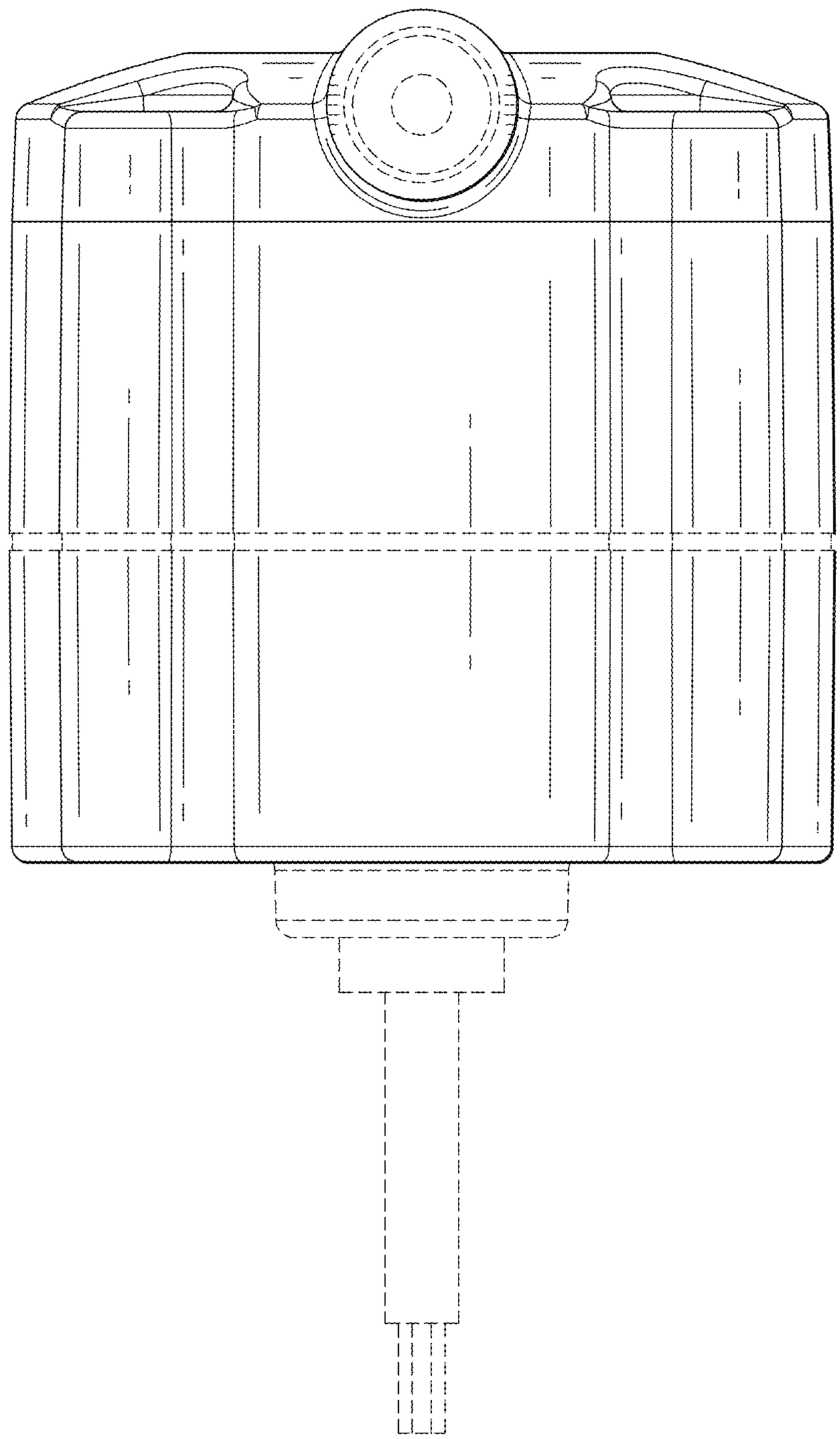

FIG. 5

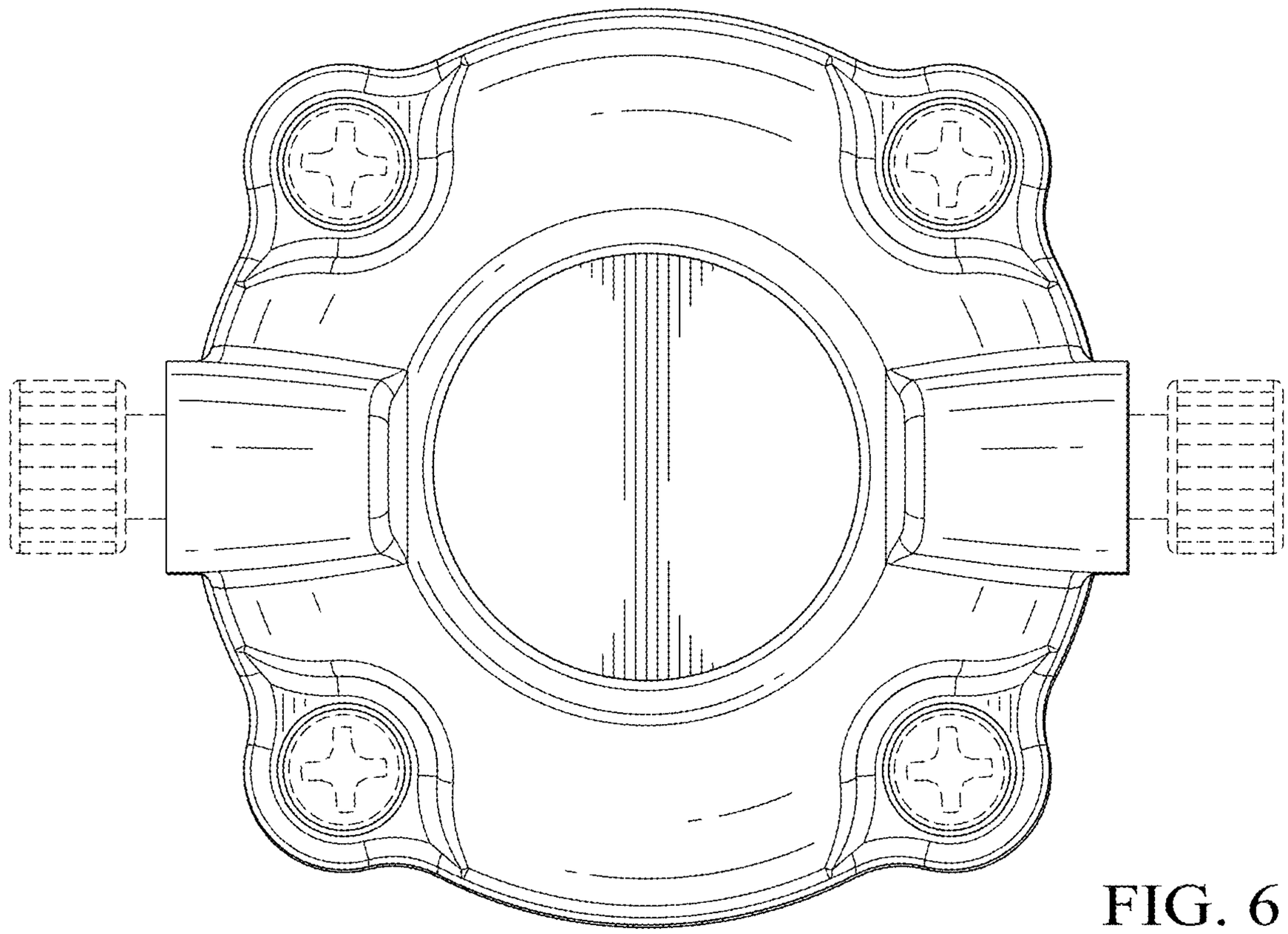

FIG. 6

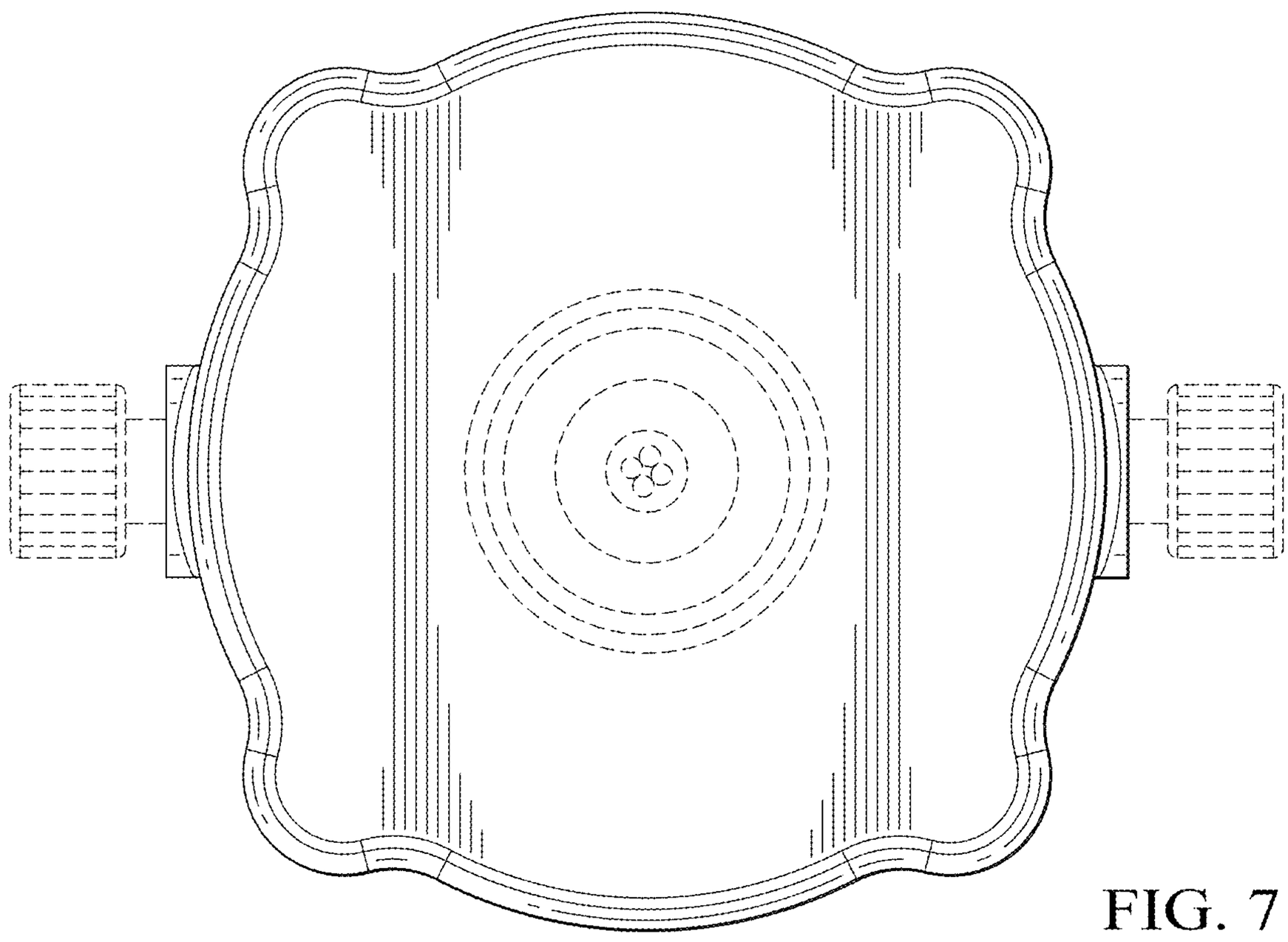

FIG. 7

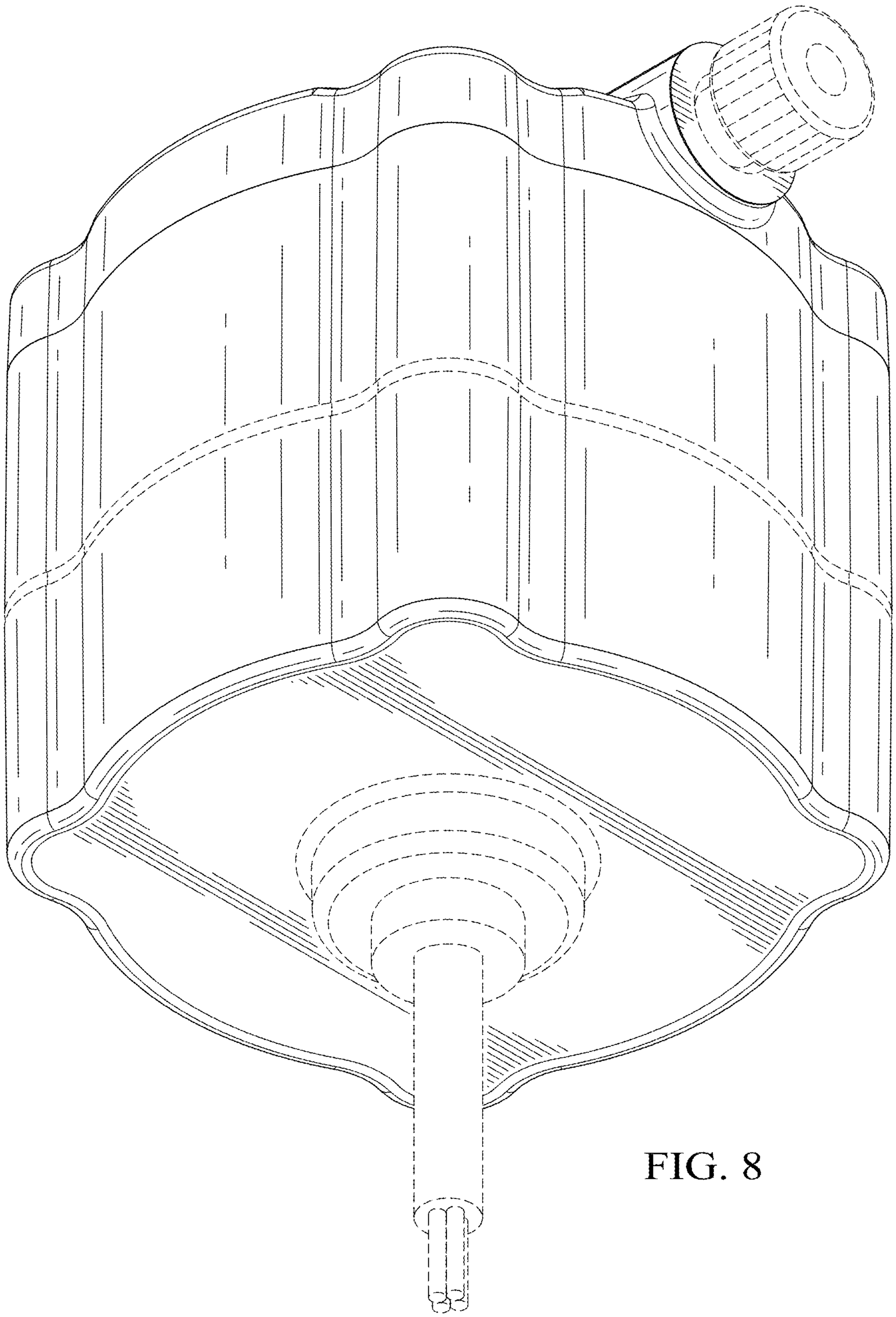

FIG. 8