US00D899687S

(12) United States Design Patent

Chen

(10) Patent No.: US D899,687 S
(45) Date of Patent: ** Oct. 20, 2020

(54) **HAIR CURLER**

(71) Applicant: **Kaimei Chen**, Ruian (CN)

(72) Inventor: **Kaimei Chen**, Ruian (CN)

(**) Term: **15 Years**

(21) Appl. No.: **29/720,648**

(22) Filed: **Jan. 15, 2020**

(30) **Foreign Application Priority Data**

Jul. 26, 2019 (CN) 2019 30 400748

(51) **LOC (12) Cl.** **28-03**

(52) **U.S. Cl.**
USPC **D28/35**

(58) **Field of Classification Search**
USPC D28/35
CPC A45D 2001/004; A45D 2/36–367; A45D 2/02; A45D 2/12; A45D 2/122; A45D 2/38; A45D 2/40; A45D 2/01; A45D 1/28; A45D 1/00; A45D 1/06; A45D 1/14; A45D 1/16; A45D 2001/045; A45D 1/04
See application file for complete search history.

(56) **References Cited**

U.S. PATENT DOCUMENTS

8,132,571	B1 *	3/2012	Jackson	A45D 1/04 132/211
D743,624	S *	11/2015	Richmond	D28/35
9,185,957	B2 *	11/2015	Richmond	A45D 2/36
D759,306	S	6/2016	Delassus	
D769,523	S *	10/2016	Fan	D28/35
D797,994	S *	9/2017	Yan	D28/35
10,537,162	B2 *	1/2020	Yeung	A45D 6/02
D876,014	S *	2/2020	Lin	D28/35
D876,015	S *	2/2020	Lin	D28/35
2005/0268933	A1 *	12/2005	Kimata	A45D 2/10 132/238
2015/0114425	A1 *	4/2015	Park	A45D 1/04 132/229
2015/0196105	A1 *	7/2015	Leung	A45D 1/04 132/228
2019/0328100	A1 *	10/2019	Duan	A45D 6/02
2020/0060405	A1 *	2/2020	Wang	A45D 1/28

OTHER PUBLICATIONS

World's first automated curling iron, 1 page, reviewed as early as Sep. 1, 2019, www.youtube.com.*
Air spin n curl, 1 page, www.amazon.com, downloaded Mar. 16, 2020.*
CHI Spin n curl vs Calista Zen Waver, 1 page, reviewed as early as Oct. 8, 2019, www.youtube.com.*
Ibeautyliss hair curler, 1 page, reviewed as early as Jan. 24, 2020, www.youtube.com.*

* cited by examiner

Primary Examiner — Jennifer Rivard
(74) *Attorney, Agent, or Firm* — ScienBiziP, P.C.

(57) **CLAIM**

The ornamental design for a hair curler, as shown and described.

DESCRIPTION

FIG. **1** is a perspective view of a hair curler;
FIG. **2** is a front elevational view thereof;
FIG. **3** is a rear elevational view thereof;
FIG. **4** is a left elevational view thereof;
FIG. **5** is a right elevational view thereof;
FIG. **6** is a top plan view thereof; and,
FIG. **7** is a bottom plan view thereof.
The evenly spaced broken lines illustrate the buttons, power connection, and interior bottom of the hair curler. None of the broken line disclosure forms part of the claimed design.

1 Claim, 7 Drawing Sheets

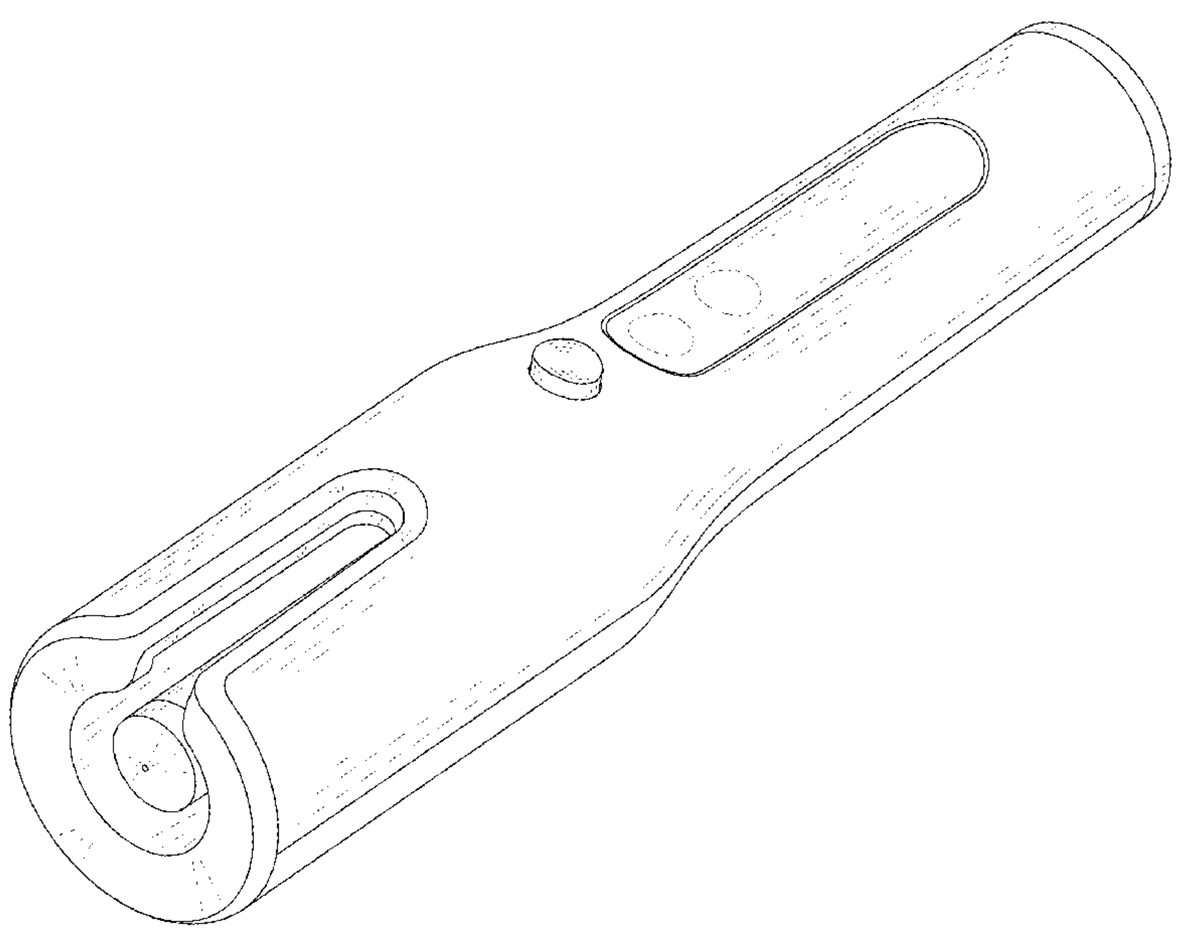

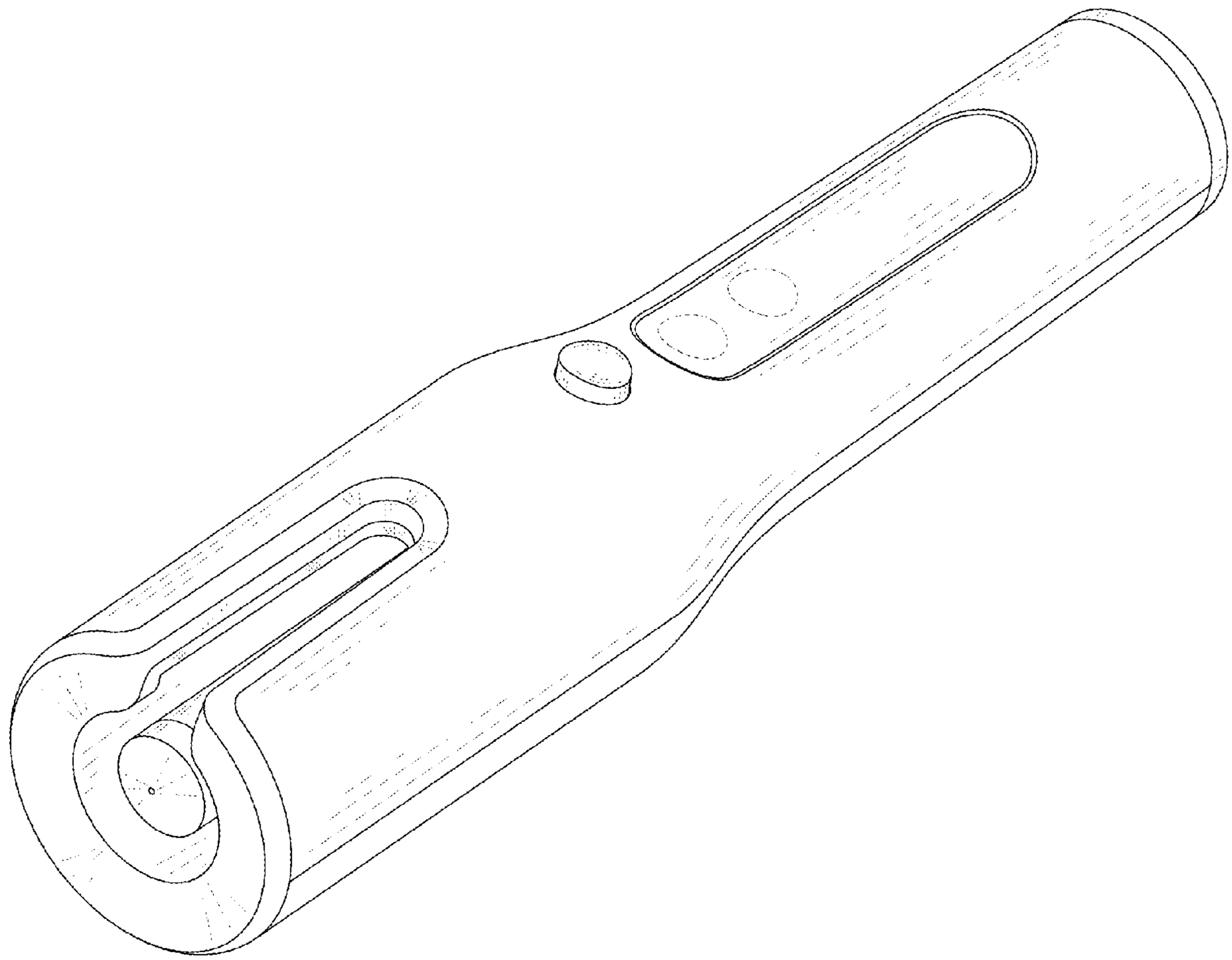

FIG.1

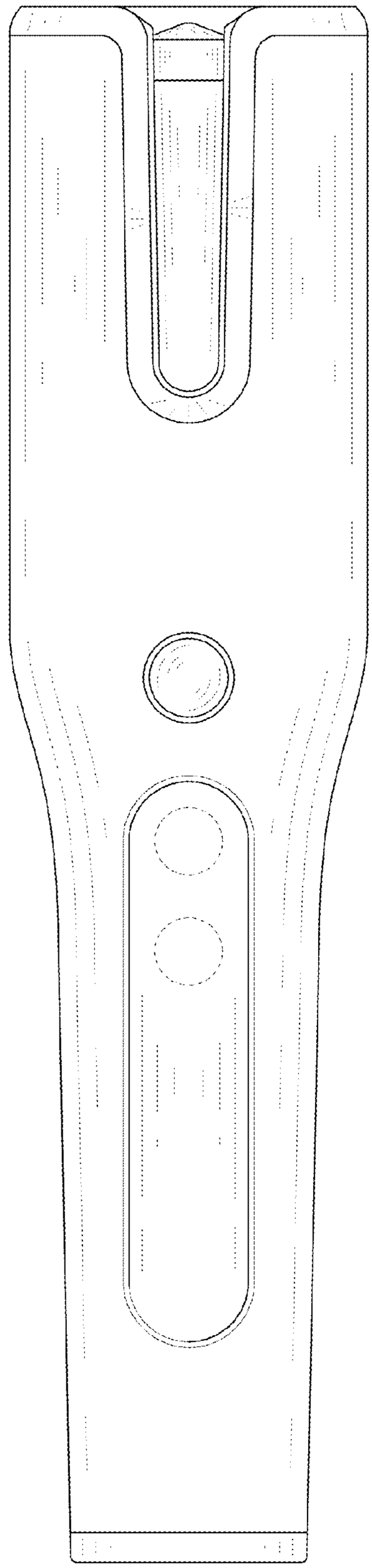

FIG.2

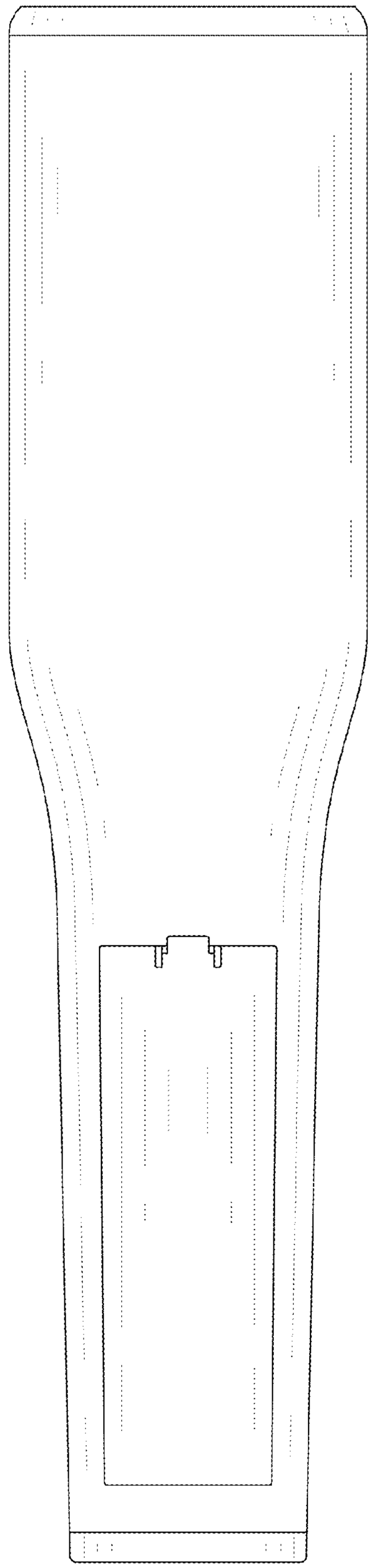

FIG.3

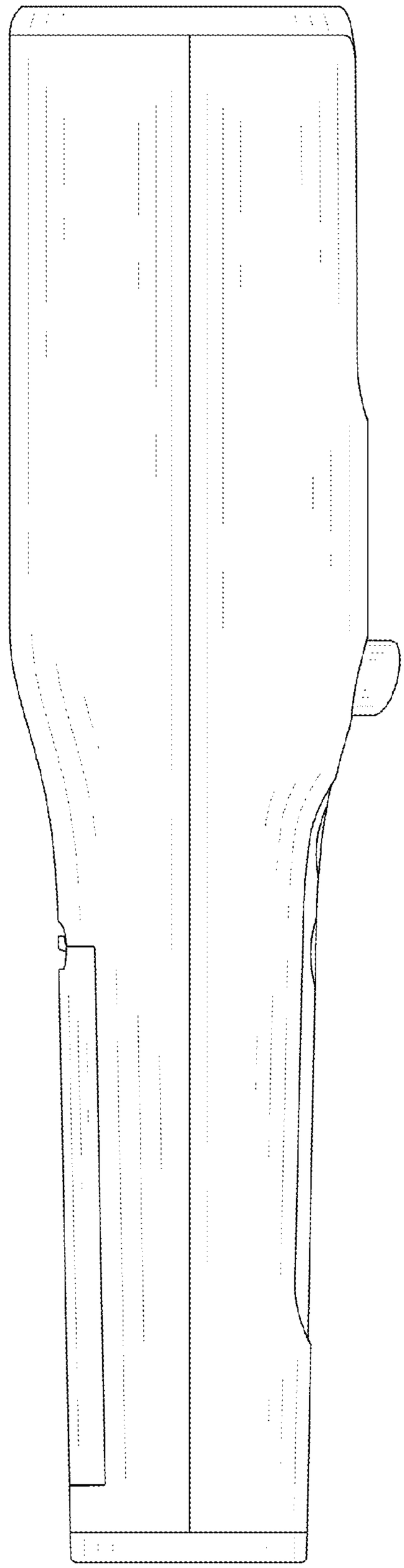

FIG.4

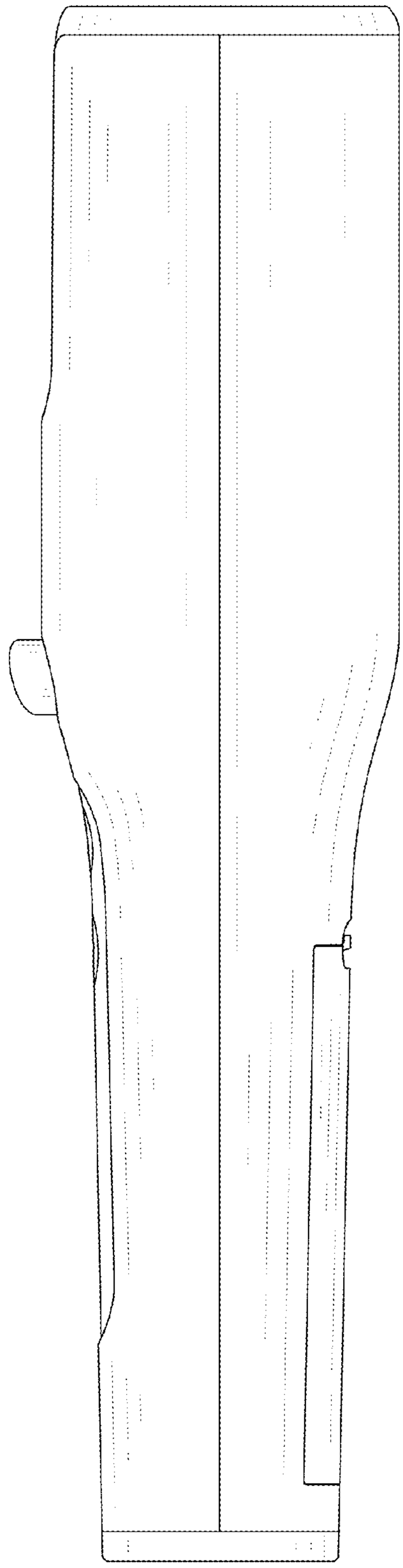

FIG.5

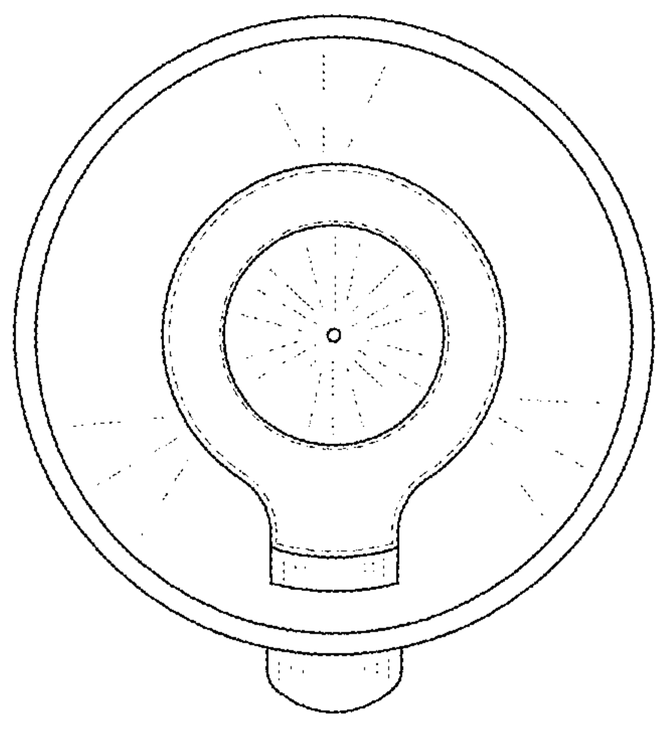

FIG.6

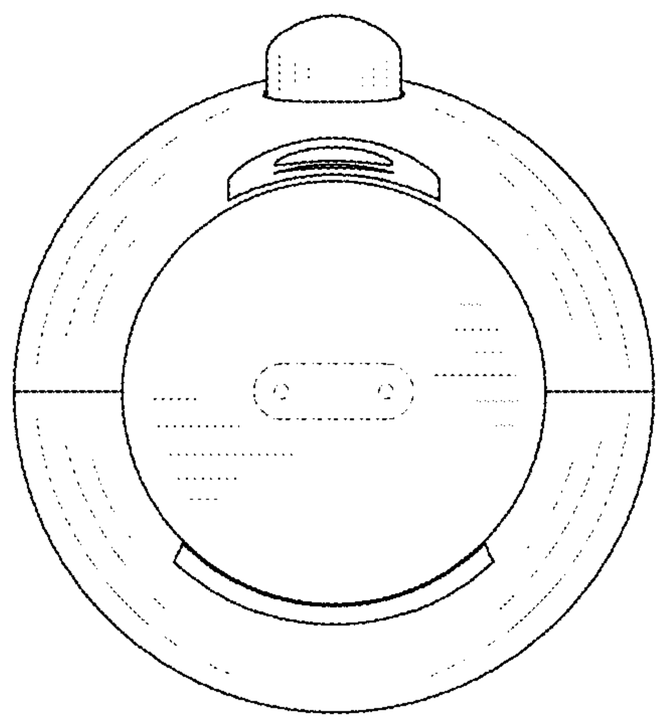

FIG. 7