US00D898210S

(12) United States Design Patent
Cheung

(10) Patent No.: US D898,210 S
(45) Date of Patent: ** Oct. 6, 2020

(54) **MASSAGE DEVICE**

(71) Applicant: **Brandcore Limited**, Road Town, Tortola (VG)

(72) Inventor: **Lai Lam Cheung**, Ma On Shan (HK)

(73) Assignee: **Brandcore Limited** (VG)

(**) Term: **15 Years**

(21) Appl. No.: **29/657,411**

(22) Filed: **Jul. 22, 2018**

(30) **Foreign Application Priority Data**

Jan. 22, 2018 (EP) 004675486-0002

(51) **LOC (12) Cl.** **28-03**

(52) **U.S. Cl.**
USPC **D24/215**

(58) **Field of Classification Search**
USPC ..... 601/19, 27, 28, 29, 30, 31, 32, 46, 48, 601/52, 128, 129, 130, 131, 134, 135, 601/136, 137, DIG. 12, DIG. 15, DIG. 16, 601/DIG. 17; D24/200, 211, 212, 213, D24/214, 215, 141; D28/7, 88; D19/115, 187; 401/202, 205, 243; 132/317, 318, 320
CPC A61H 19/34; A61H 19/40; A61H 19/44; A61H 19/50
See application file for complete search history.

(56) **References Cited**

U.S. PATENT DOCUMENTS

D306,347 S * 2/1990 Gyurik D24/119
D342,139 S * 12/1993 Wollman D24/214
D422,748 S * 4/2000 Lang D19/117
D429,847 S * 8/2000 Lang D28/7
7,252,091 B1 * 8/2007 Wayne A45D 19/02 132/112
D582,603 S * 12/2008 Dibnah D28/7
7,478,641 B2 * 1/2009 Rousselet A45D 40/24 132/318
D592,313 S * 5/2009 Levine D24/214
D603,960 S * 11/2009 Turner, III D24/105
7,678,066 B2 * 3/2010 Habatjou A45D 34/041 401/209
D615,419 S * 5/2010 Owen D28/7
D620,601 S * 7/2010 TerMeer D24/215
D636,888 S * 4/2011 Nikitczuk D24/215
D648,862 S * 11/2011 Yen D24/215
D652,527 S * 1/2012 Marshall D24/215
D652,945 S * 1/2012 Chen D24/215
(Continued)

OTHER PUBLICATIONS

Amazon, "Doc Johnson White Nights Pocket Rocket", May 21, 2008. https://www.amazon.com/dp/B000JVGKCC/ref=nav_timeline_asin?_encoding=UTF8&th=1. Shown on p. 1. (Year: 2008).*

Primary Examiner — Cynthia Ramirez
Assistant Examiner — Michael A Maharajh
(74) *Attorney, Agent, or Firm* — Merek, Blackmon & Voorhees, LLC

(57) **CLAIM**

The ornamental design for a massage device, as shown and described.

DESCRIPTION

FIG. **1** is a perspective view of the massage device showing my new design.
FIG. **2** is a front plan view of the massage device of FIG. **1**.
FIG. **3** is a back of the massage device of FIG. **1**.
FIG. **4** is a left side view of the massage device of FIG. **1**; with the right side being a mirror image thereof.
FIG. **5** is an enlarged bottom view of the massage device of FIG. **1** thereof; and,
FIG. **6** is an enlarged top view of the massage device of FIG. **1** thereof.

1 Claim, 4 Drawing Sheets

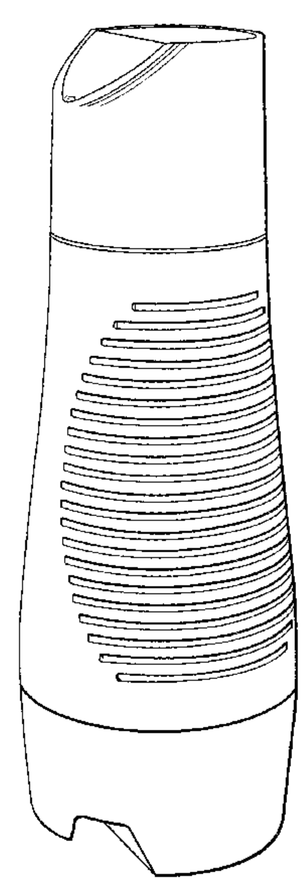

(56) **References Cited**

U.S. PATENT DOCUMENTS

D654,217 S * 2/2012 Brodish D28/7
D657,884 S * 4/2012 Imboden D24/215
8,152,746 B2 * 4/2012 Nan A61H 19/44 600/38
D666,733 S * 9/2012 Caggiano D24/215
D668,346 S * 10/2012 Zeng D24/215
D673,687 S * 1/2013 Zeng D24/215
D681,842 S * 5/2013 Chang D24/215
D685,105 S * 6/2013 Marshall D24/215
8,500,355 B2 * 8/2013 Liu A45D 34/041 401/208
D690,462 S * 9/2013 Holloway D28/7
8,550,983 B2 * 10/2013 Shim A61H 19/34 600/38
D693,017 S * 11/2013 Tai D24/215
D693,933 S * 11/2013 Tai D24/215
D694,416 S * 11/2013 Tai D24/215
D694,417 S * 11/2013 Tai D24/215
D695,413 S * 12/2013 Grust D24/214
D695,414 S * 12/2013 Matsuura D24/215
D704,345 S * 5/2014 Tai D24/215
D708,754 S * 7/2014 Harangvolgyi D24/211
D717,950 S * 11/2014 Agrawal D24/141
D719,653 S * 12/2014 Agrawal D24/141
D737,432 S * 8/2015 Burke D24/119
D741,479 S * 10/2015 Agrawal D24/141
D745,742 S * 12/2015 Betts D28/7
D759,260 S * 6/2016 Topolovac D24/215
D759,261 S * 6/2016 Son D24/215
D760,914 S * 7/2016 Hutchinson D24/215
D815,734 S * 4/2018 Burke D24/119
D816,897 S * 5/2018 Corsi D28/7
D836,791 S * 12/2018 Tarashchansky D24/215
D840,246 S * 2/2019 Shalev D9/684
D841,234 S * 2/2019 Laaly D28/7
D842,126 S * 3/2019 Breidenbach D9/726
D843,593 S * 3/2019 Nakamura D24/215
D844,998 S * 4/2019 Wiener D4/114
2008/0101850 A1 * 5/2008 Wojcik A45D 34/04 401/265
2011/0091264 A1 * 4/2011 Zhang A45D 34/04 401/139

* cited by examiner

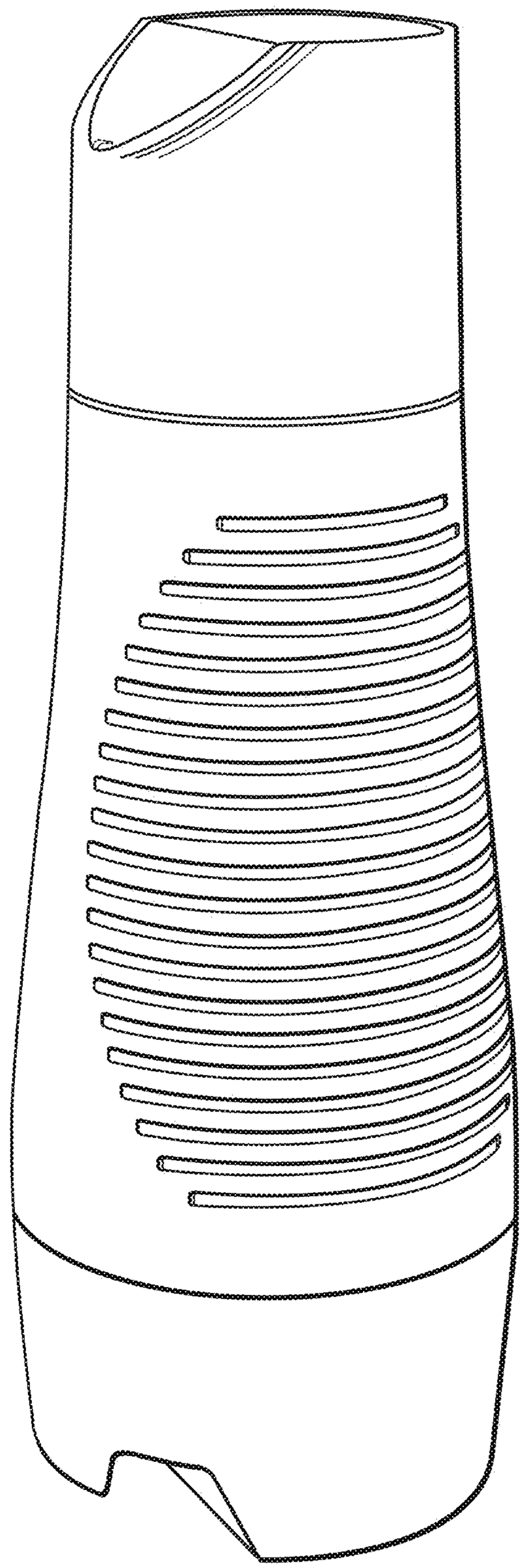

Fig. 1

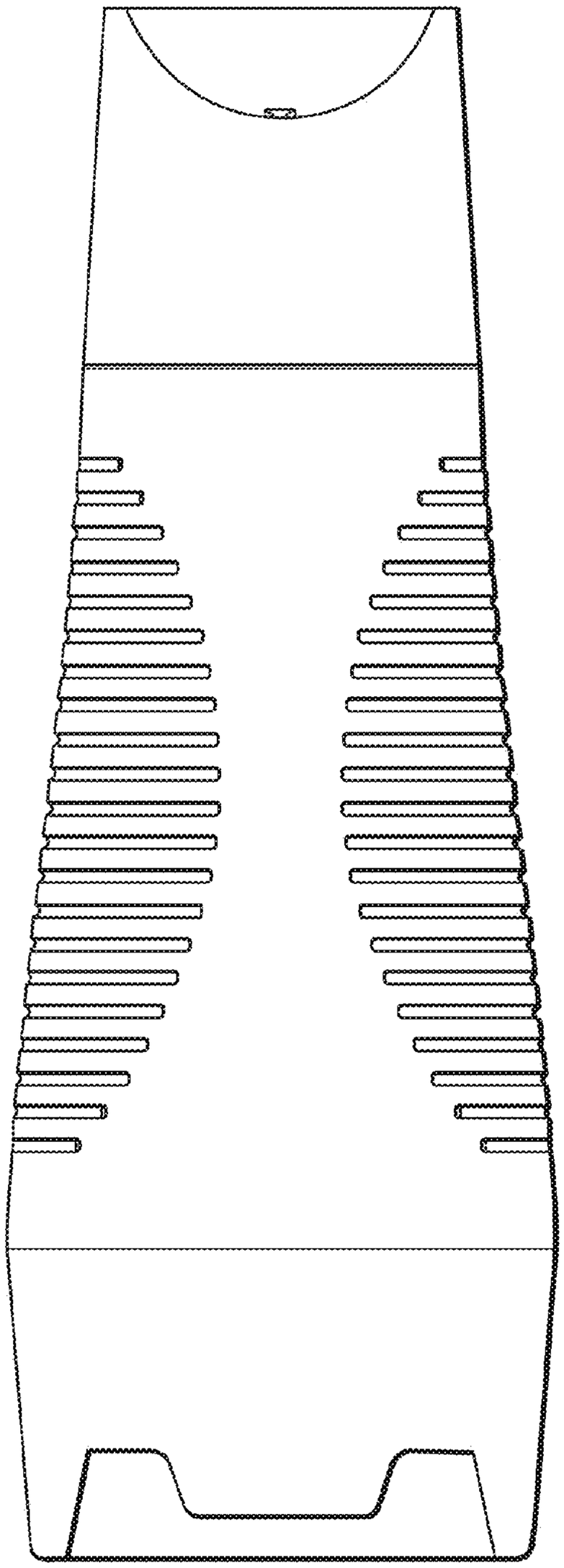

Fig. 2

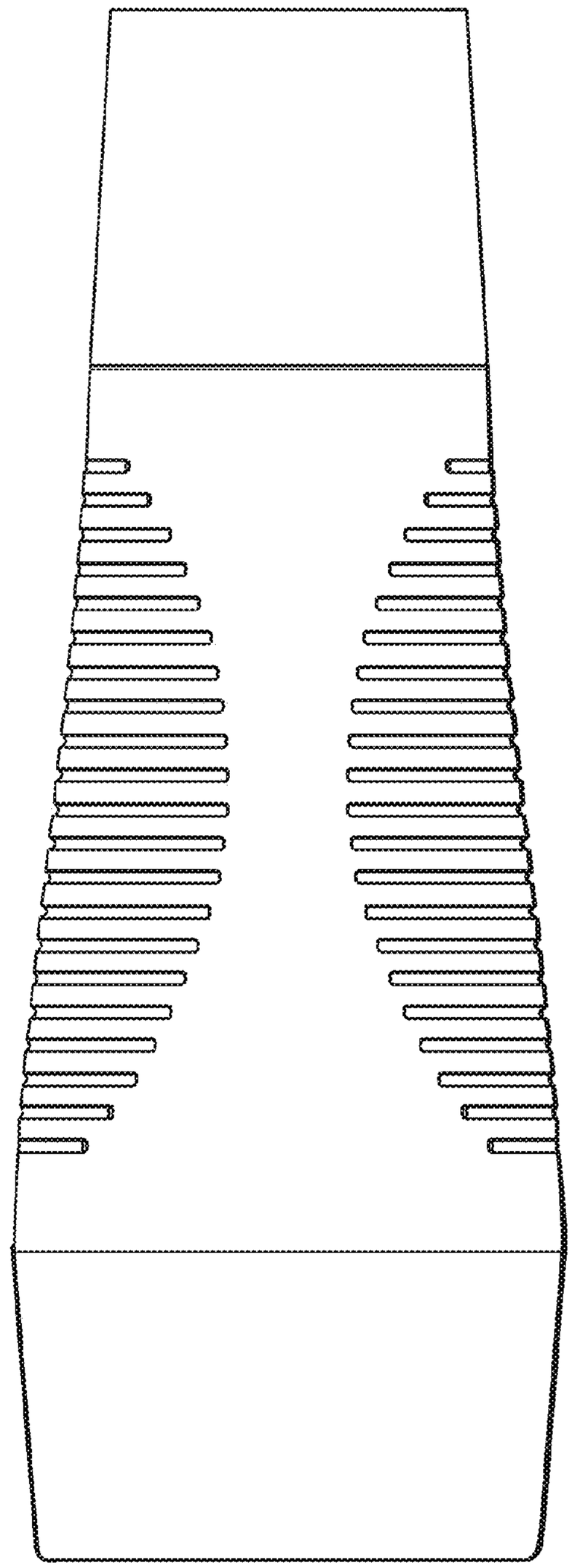

Fig. 3

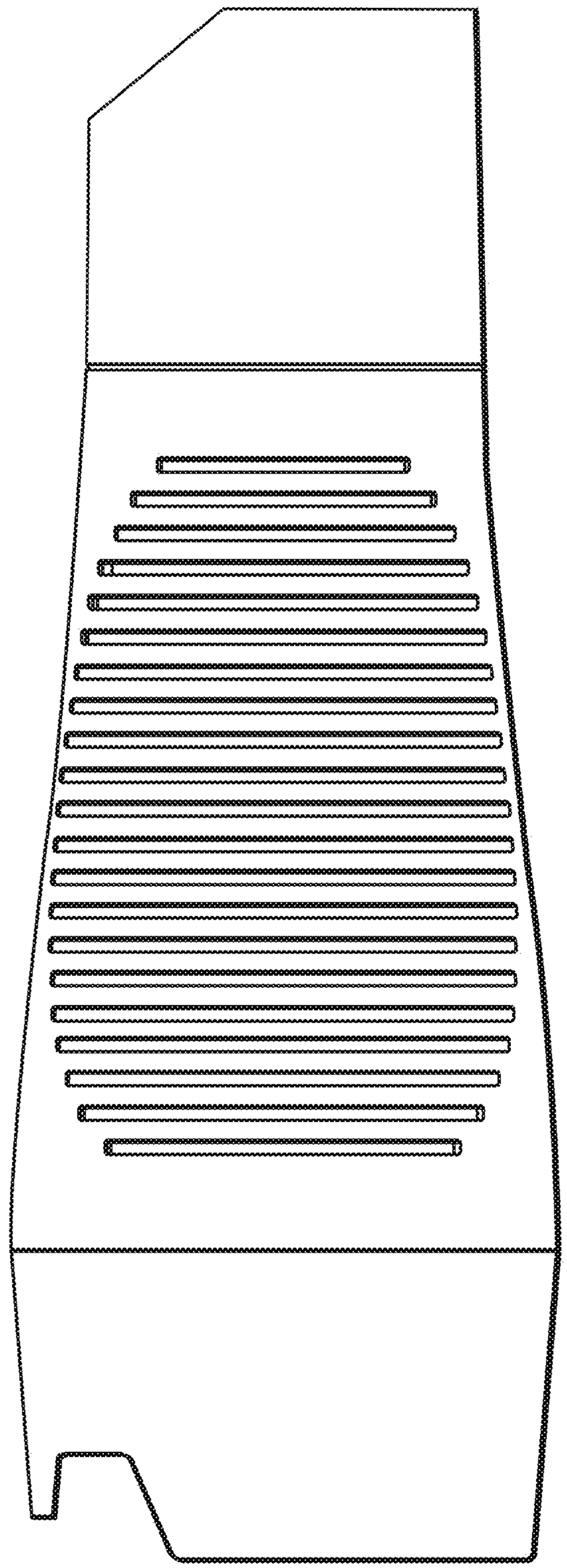

Fig. 4

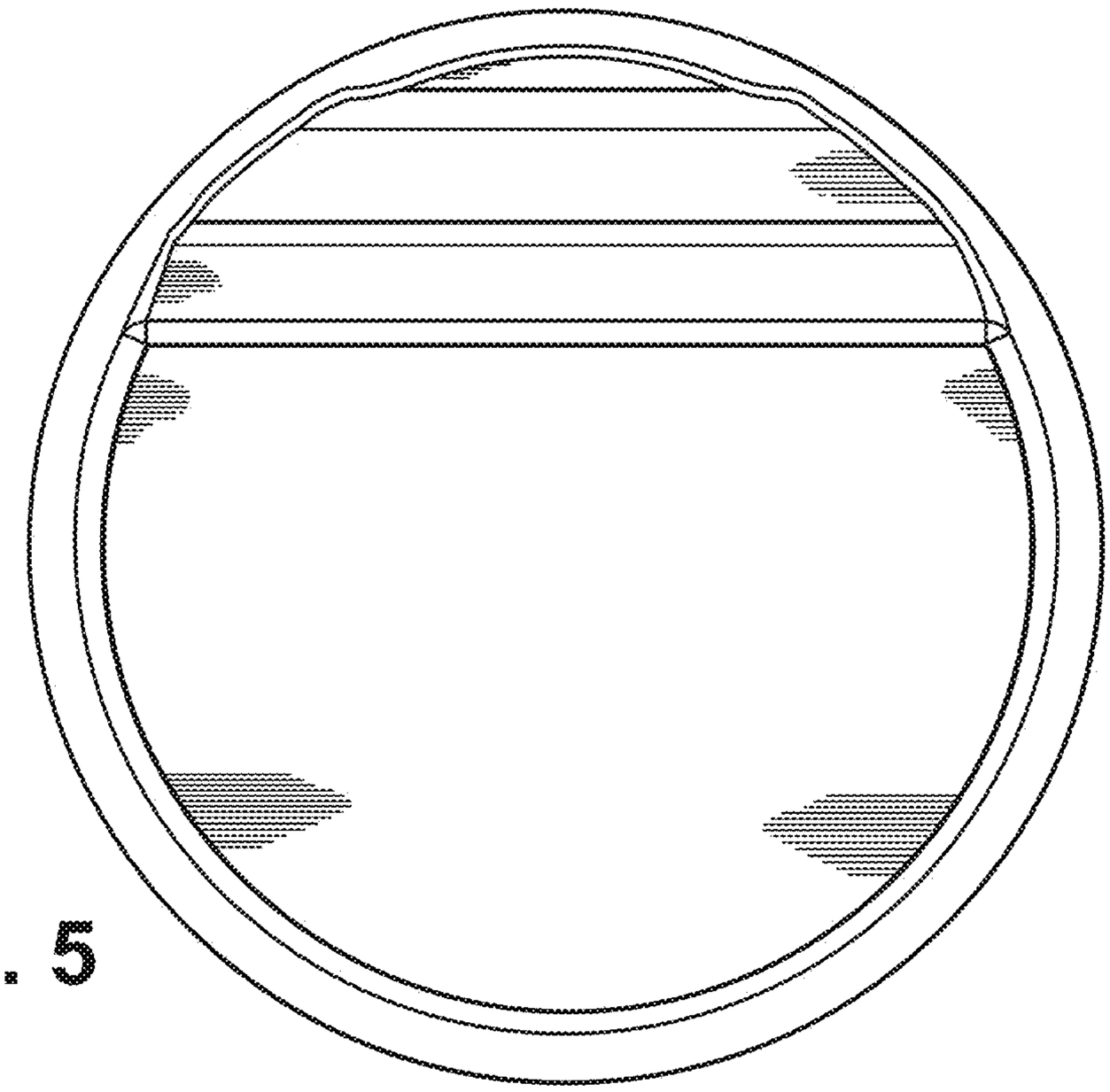

Fig. 5

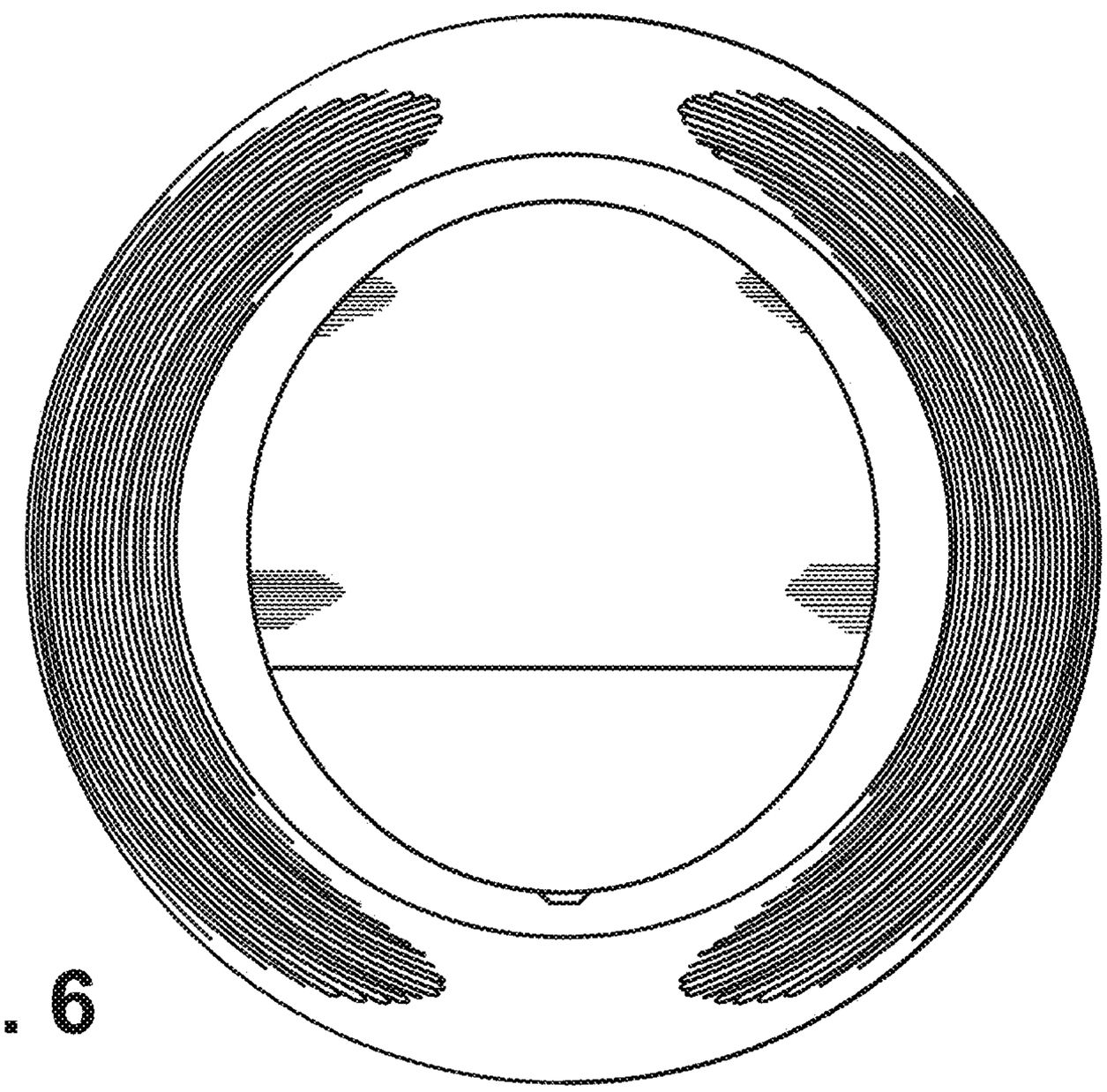

Fig. 6