US00D898008S

(12) United States Design Patent

Seo et al.

(10) Patent No.: US D898,008 S
(45) Date of Patent: ** Oct. 6, 2020

(54) **ELECTRONIC DEVICE**

(71) Applicant: **Samsung Electronics Co., Ltd.**, Suwon-si (KR)

(72) Inventors: **Joo-Ho Seo**, Seoul (KR); **Dong-Hun Kim**, Seoul (KR); **Han-Gil Song**, Seoul (KR); **Min-Hyouk Lee**, Bundang-gu (KR)

(73) Assignee: **Samsung Electronics Co., Ltd.**, Suwon-si (KR)

(**) Term: **15 Years**

(21) Appl. No.: **29/686,066**

(22) Filed: **Apr. 2, 2019**

(30) **Foreign Application Priority Data**

Oct. 4, 2018 (KR) 30-2018-0045674

(51) **LOC (12) Cl.** **14-03**

(52) **U.S. Cl.**
USPC **D14/248**

(58) **Field of Classification Search**
USPC .... D14/138 G, 138 AD, 248, 341, 371, 374, D14/138 R, 138 AA, 138 AB, 138 AC, D14/138 C, 247
CPC H04M 1/0202; H04M 1/0235; H04M 1/0237; H04M 1/0239; H04M 1/0266; H04M 1/0268; H04M 1/027; H04M 1/0295; H04M 1/02; H04M 1/0279; H04M 1/0283
See application file for complete search history.

(56) **References Cited**

U.S. PATENT DOCUMENTS

D554,098 S * 10/2007 Lee ..... D14/138 AD
D592,628 S * 5/2009 Kim ..... D14/138 AD
D611,025 S * 3/2010 Yu ..... D14/138 G
D618,646 S * 6/2010 Wykes ..... D14/138 AD
D619,989 S * 7/2010 Huang ..... D14/138 AD
(Continued)

FOREIGN PATENT DOCUMENTS

CN 2015304210998 4/2016
EM 002745273-0003 2/2016
EM 003361401-0001 12/2016

Primary Examiner — Bridget L Eland
(74) *Attorney, Agent, or Firm* — NSIP Law

(57) **CLAIM**

We claim the ornamental design for an electronic device, as shown and described.

DESCRIPTION

FIG. **1** is a front perspective view of an electronic device showing our new design;
FIG. **2** is a front view thereof;
FIG. **3** is a rear view thereof;
FIG. **4** is a left-side view thereof;
FIG. **5** is a right-side view thereof;
FIG. **6** is a top view thereof;
FIG. **7** is a bottom view thereof;
FIG. **8** is a rear perspective view thereof;
FIG. **9** is an enlarged view of the encircled portion in FIG. **4**;
FIG. **10** is an enlarged view of the encircled portion in FIG. **6**; and,
FIG. **11** is an enlarged view of the encircled portion in FIG. **8**.

The evenly-spaced broken lines in the figures depict portions of the electronic device which form no part of the claimed design.

The dot-dash broken lines in the figures define boundaries of the claimed design and form no part of the claimed design.

The dot-dot-dash broken lines encircling portions of the claimed design that are illustrated in enlargements form no part of the claimed design.

1 Claim, 11 Drawing Sheets

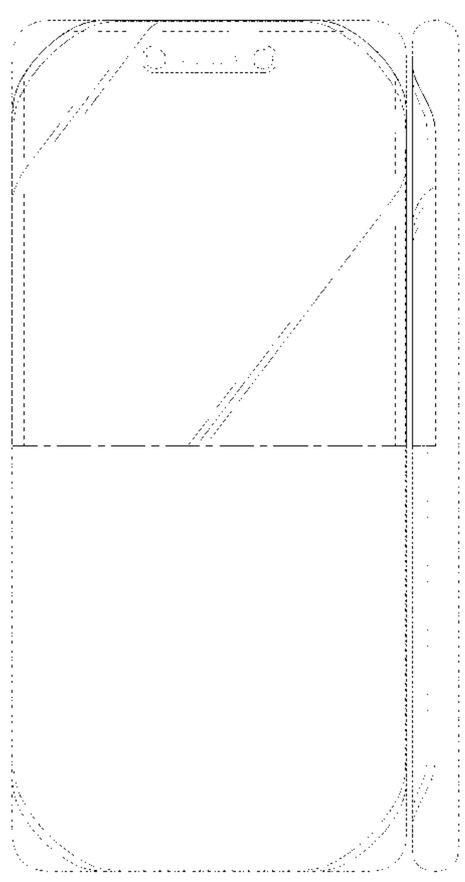

(56) **References Cited**

U.S. PATENT DOCUMENTS

D638,814	S	*	5/2011	Sutherland	D14/138 G
D656,118	S	*	3/2012	Kim	D14/138 G
D678,232	S	*	3/2013	Harmon	D14/138 G
D681,590	S	*	5/2013	Han	D14/138 G
D691,576	S	*	10/2013	Lee	D14/138 G
D712,864	S	*	9/2014	Hirota	D14/138 G
D750,589	S	*	3/2016	Kim	D14/138 G
D751,051	S	*	3/2016	Cho	D14/138 G
D763,837	S	*	8/2016	Choe	D14/248
D768,594	S		10/2016	Szeto	
D783,563	S		4/2017	Choo et al.	
D785,612	S	*	5/2017	Kim	D14/248
D786,226	S	*	5/2017	Kim	D14/248
D797,089	S	*	9/2017	Lee	D14/248
D797,090	S	*	9/2017	Lee	D14/248
D797,726	S	*	9/2017	Lee	D14/341
D800,083	S	*	10/2017	Park	D14/138 G
D803,822	S	*	11/2017	Lee	D14/248
D816,649	S	*	5/2018	Song	D14/248
D845,288	S	*	4/2019	Park	D14/248
D846,522	S	*	4/2019	Lee	D14/138 G
D854,523	S	*	7/2019	Kim	D14/248
D854,525	S	*	7/2019	Choi	D14/248
D860,178	S	*	9/2019	Song	D14/248
D864,934	S	*	10/2019	Park	D14/248
D866,541	S	*	11/2019	Park	D14/248
D866,542	S	*	11/2019	Park	D14/248
D867,349	S	*	11/2019	Kim	D14/248
D868,050	S	*	11/2019	Song	D14/248
D868,763	S	*	12/2019	Kim	D14/248
D870,088	S	*	12/2019	Kim	D14/248
D876,416	S	*	2/2020	Park	D14/248
D877,129	S	*	3/2020	Kim	D14/248
D882,541	S	*	4/2020	Xu	D14/138 G
D882,556	S	*	4/2020	Kim	D14/248

* cited by examiner

FIG. 1

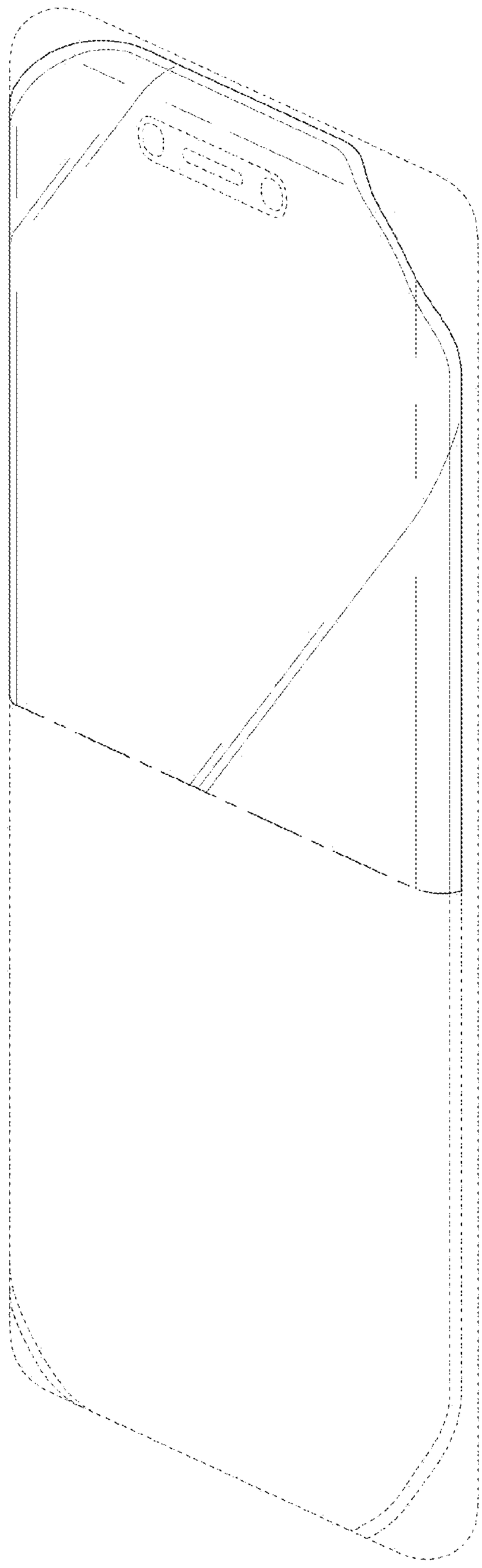

FIG. 2

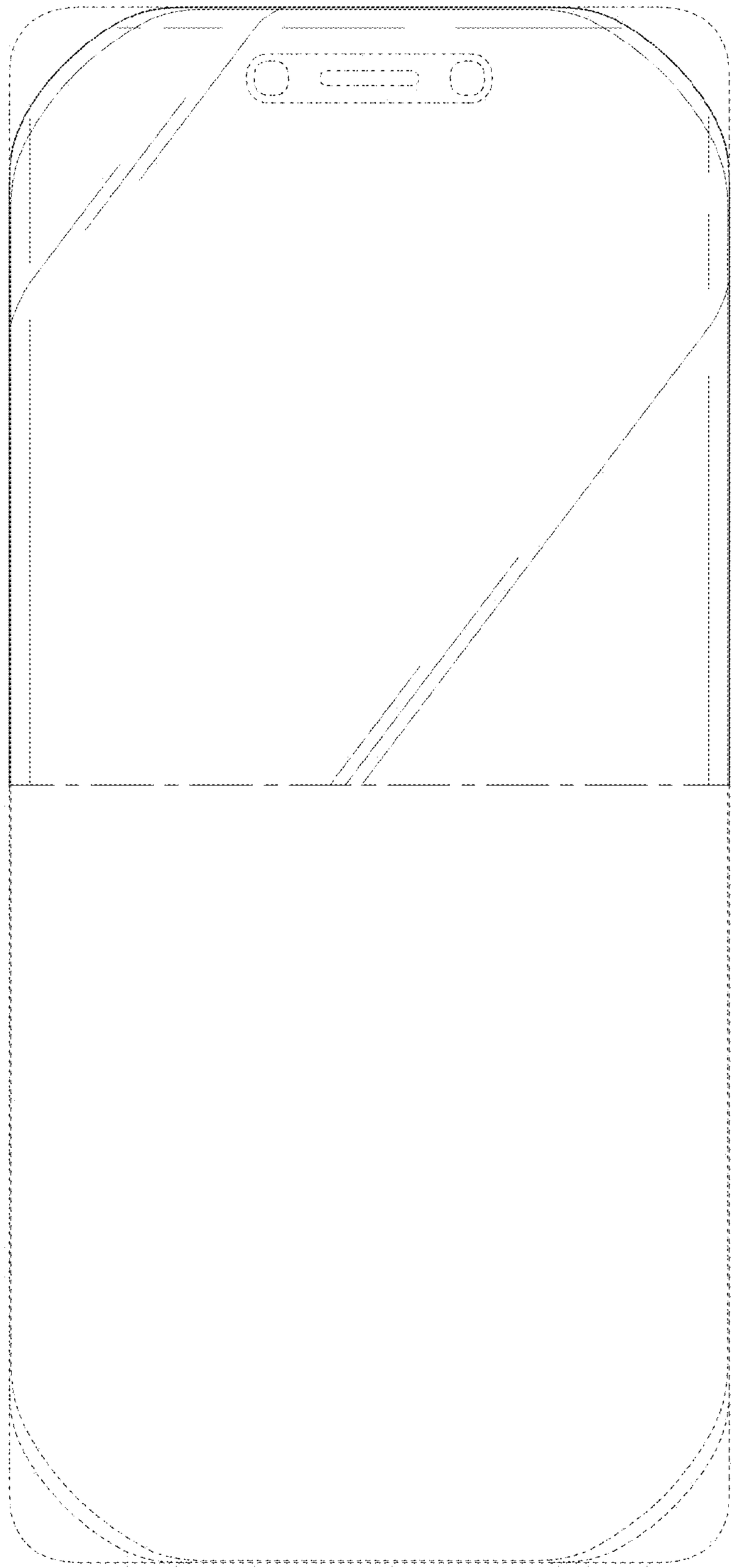

FIG. 3

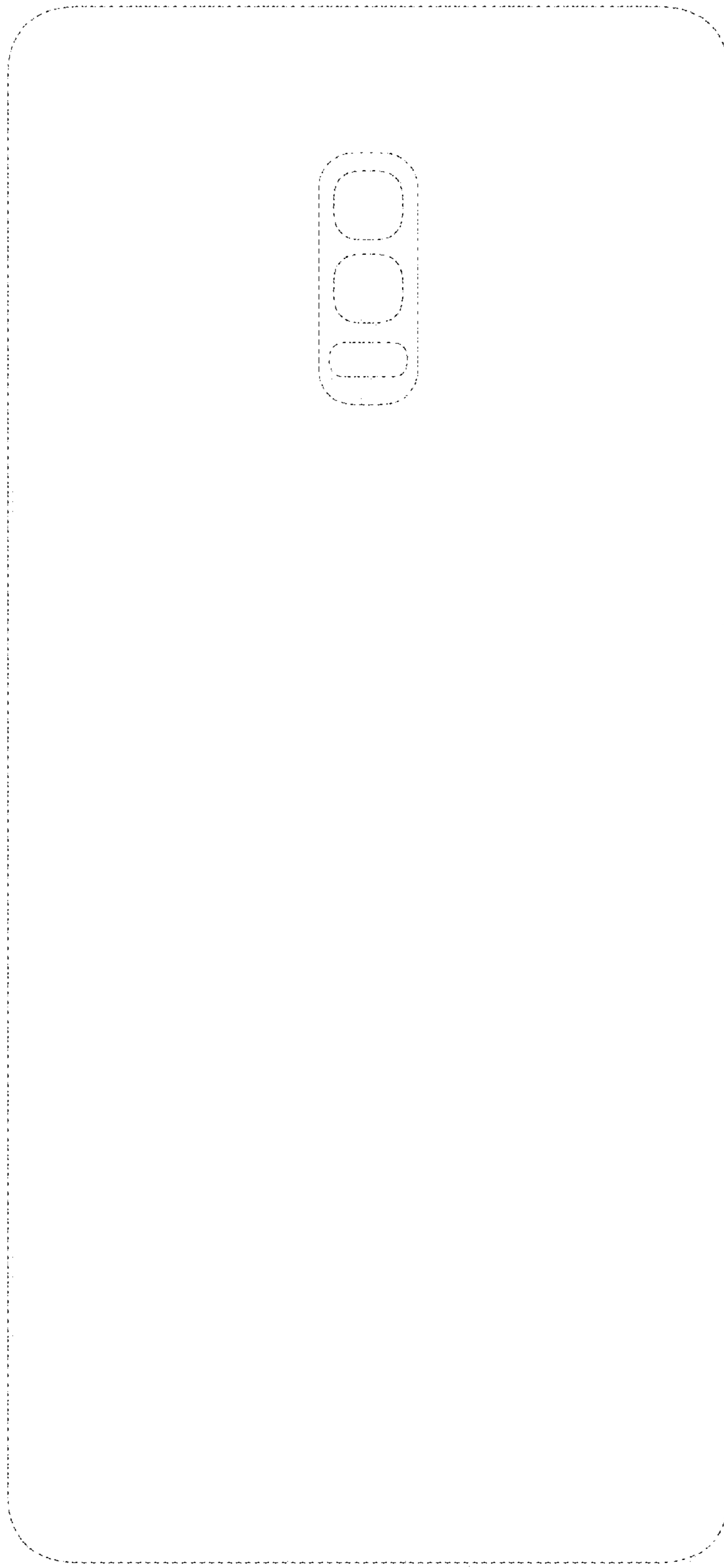

FIG. 4

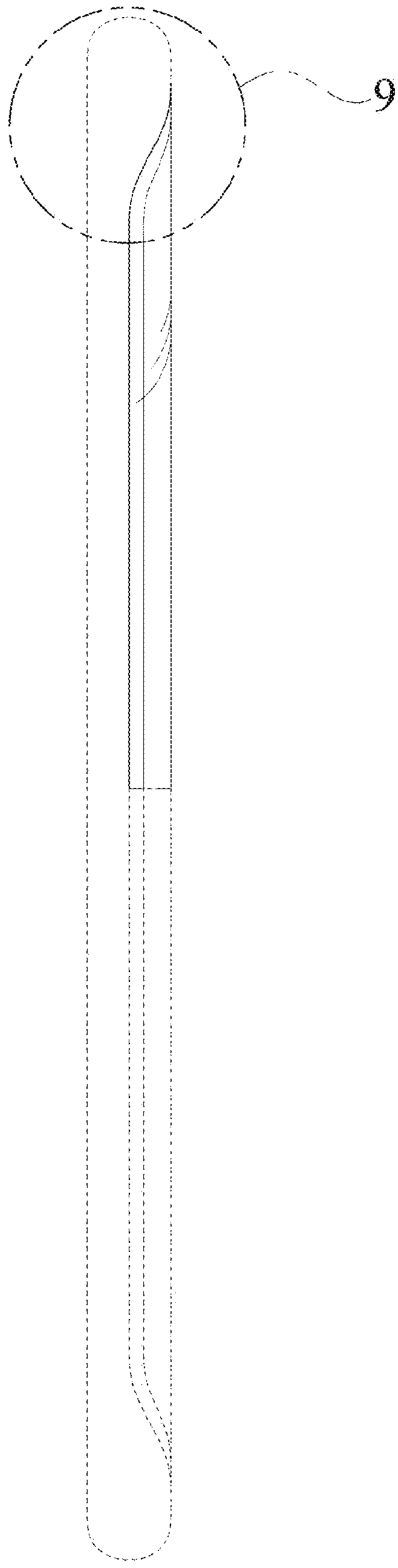

FIG. 5

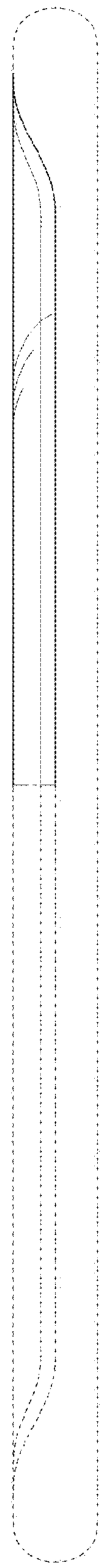

FIG. 6

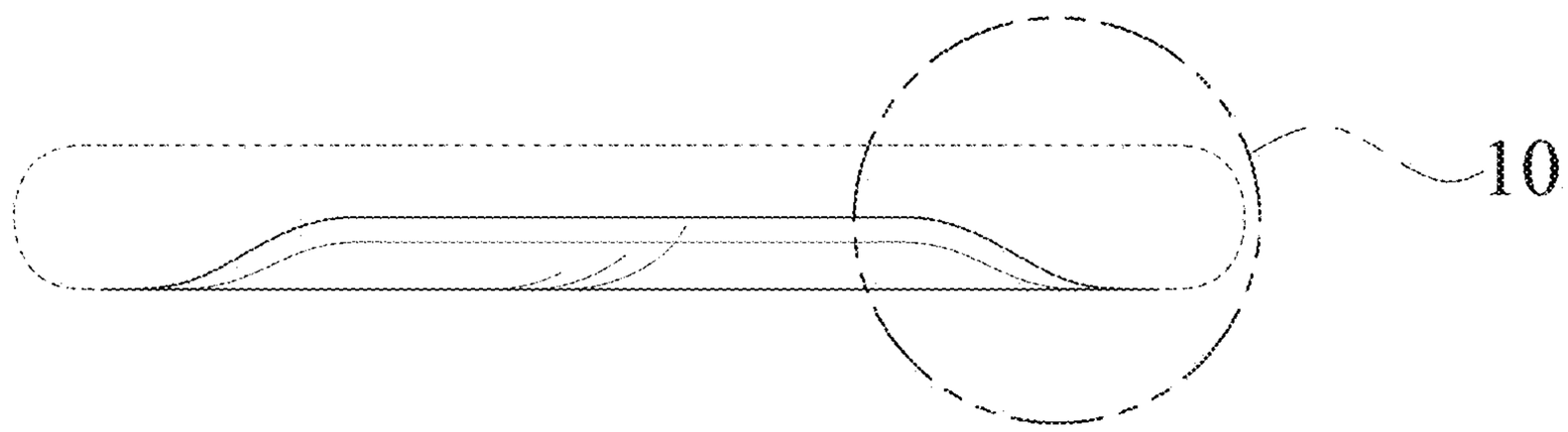

FIG. 7

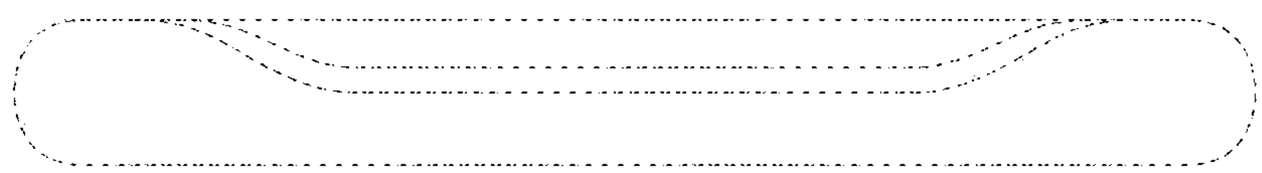

FIG. 8

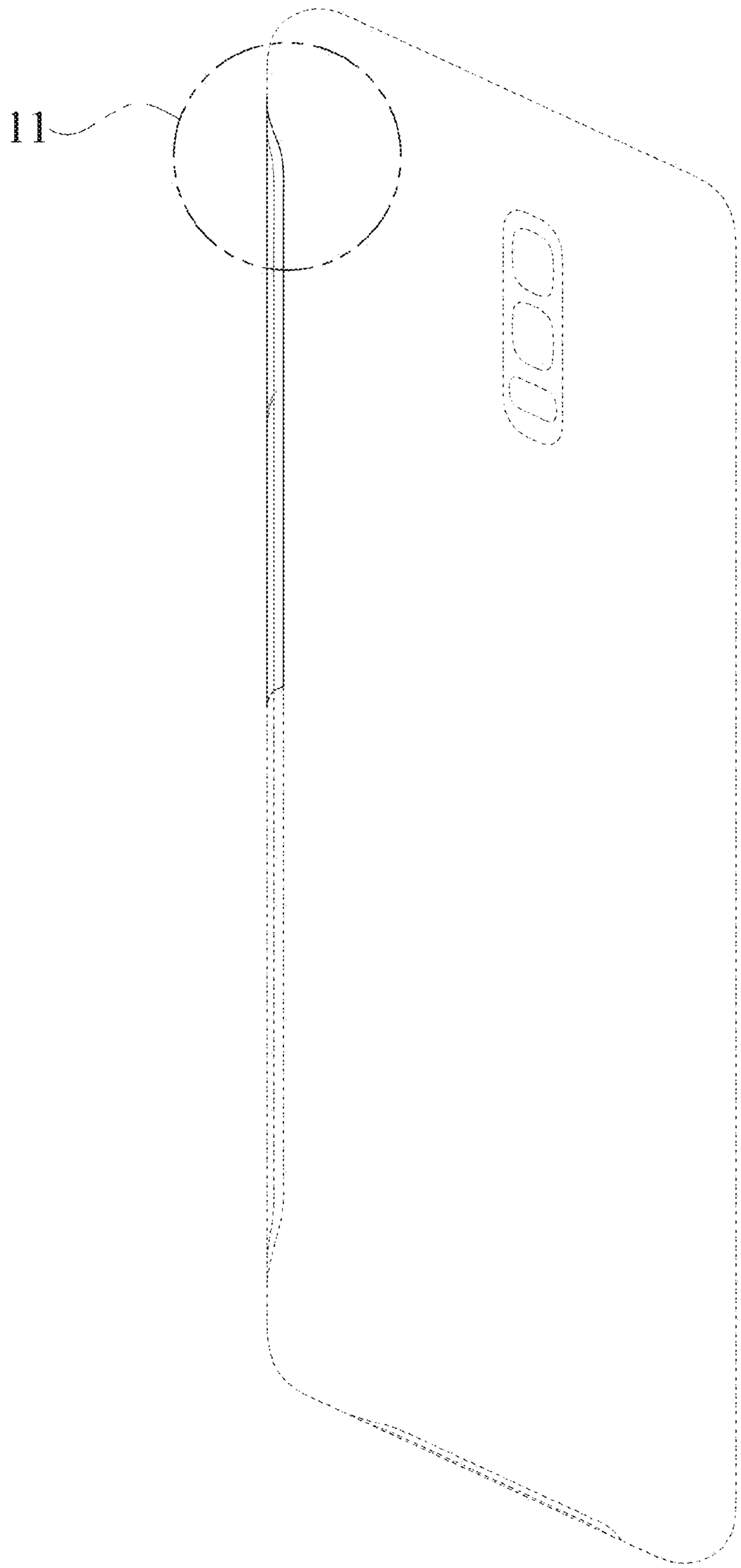

FIG. 9

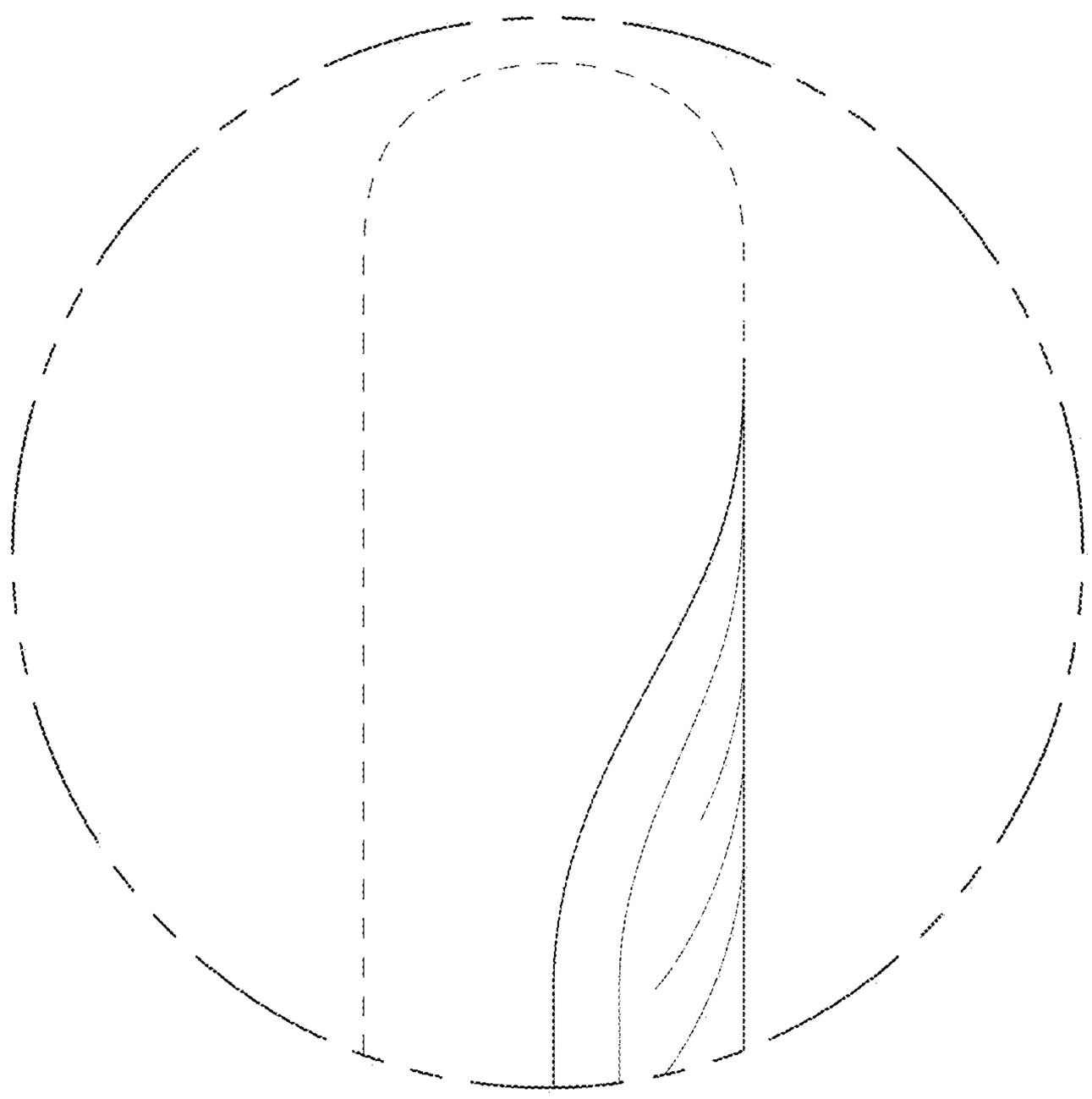

FIG. 10

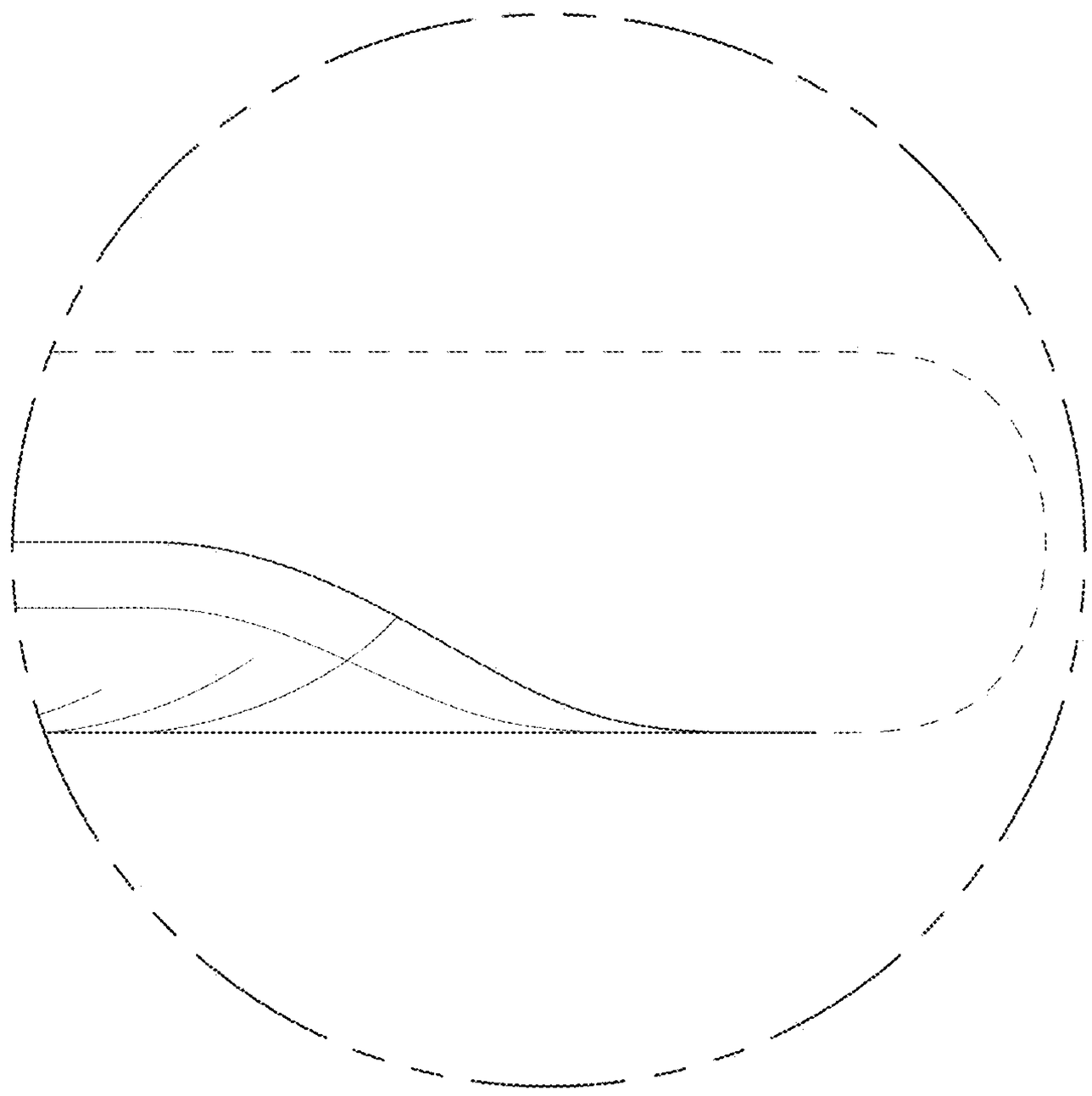
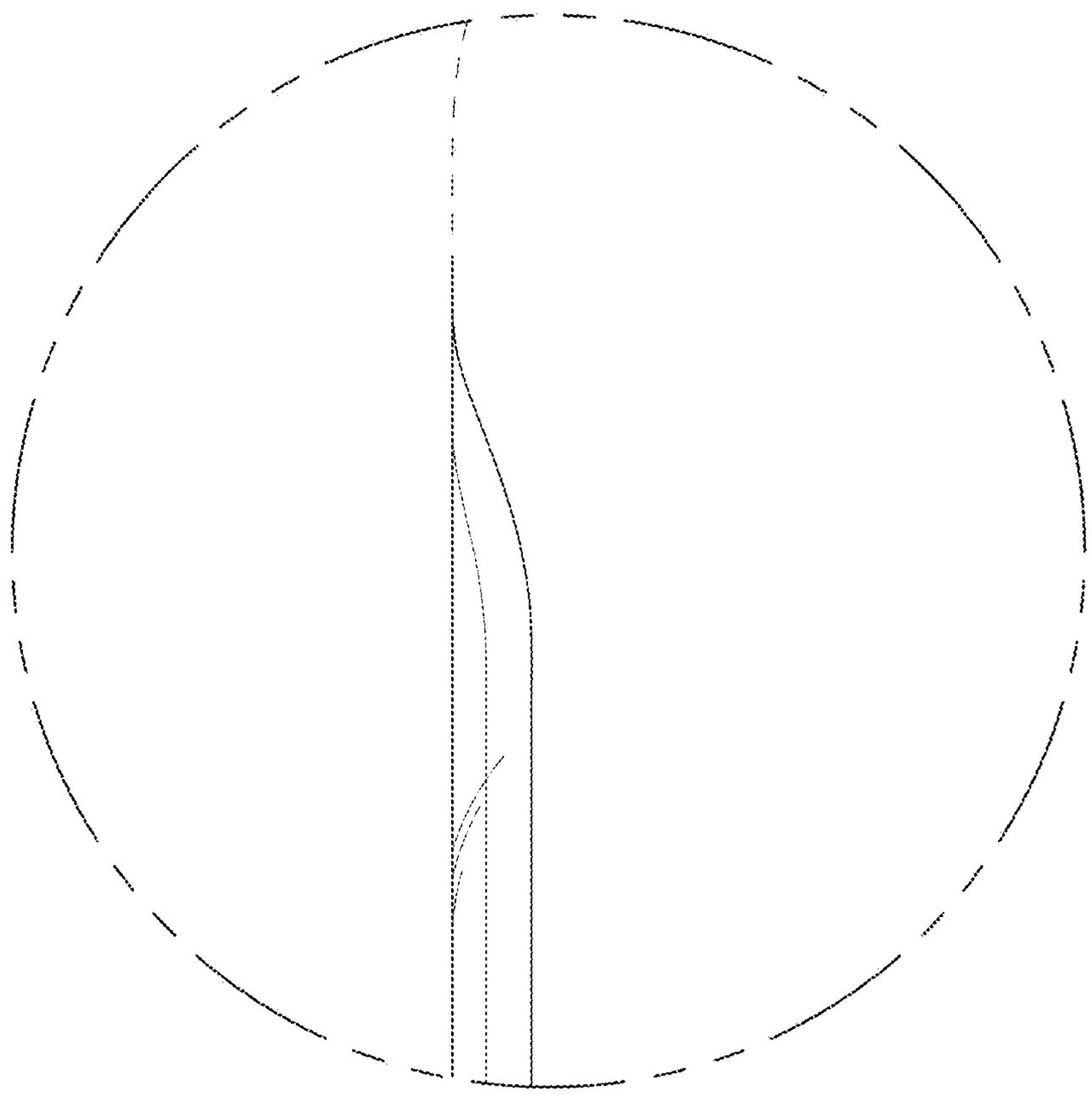
FIG. 11