US00D897831S

(12) United States Design Patent

Hawry

(10) Patent No.: US D897,831 S
(45) Date of Patent: ** Oct. 6, 2020

(54) **CONTAINER TRAY ASSEMBLY WITH CHILD RESISTANT SLEEVE**

(71) Applicant: **Berlin Packaging, LLC**, Chicago, IL (US)

(72) Inventor: **Liam Hawry**, Chicago, IL (US)

(73) Assignee: **Berlin Packaging, LLC**, Chicago, IL (US)

(**) Term: **15 Years**

(21) Appl. No.: **29/666,089**

(22) Filed: **Oct. 10, 2018**

(51) **LOC (12) Cl.** **09-03**

(52) **U.S. Cl.**
USPC **D9/414**

(58) **Field of Classification Search**
USPC D28/76–85, 88, 90, 99; D9/414, 424, D9/430, 432, 456, 499, 503, 529, 516, D9/556, 686, 738; D24/121, 227, 229, D24/231; D3/203.1, 203.2; D27/172, D27/186
CPC A45D 33/00; A45D 33/003; A45D 33/006; A45D 33/008; A45D 33/025; A45D 33/06; A45D 33/14; A45D 33/18; A45D 33/22; A45D 33/24; A45D 33/26; A45D 34/048; A45D 34/06; A45D 40/00; A45D 40/0068; A45D 4/02; A45D 40/023; A45D 40/026; A45D 40/04; A45D 40/06; A45D 4/065; A45D 40/10; A45D 40/12; A45D 40/18; A45D 40/22; A45D 40/222; A45D 40/24; A45D 40/262; A45D 40/264; A45D 40/265; A45D 42/00; A45D 42/02; A45D 42/04
See application file for complete search history.

(56) **References Cited**

U.S. PATENT DOCUMENTS

2,377,120	A		3/1932	Apfelbaum	
2,236,224	A		3/1939	Raschkind	
2,751,135	A		5/1953	Kessler	
2,857,070	A		10/1958	Elias	
3,262,747	A		7/1966	Kotzek et al.	
3,395,849	A		8/1968	Gilliam	
3,582,171	A	*	6/1971	McArdle	A45C 13/16 312/224
3,648,918	A		3/1972	Van Inwagen	
3,749,230	A		7/1973	Foster	
3,782,584	A		1/1974	Swenson et al.	
3,833,143	A		9/1974	Starkermann et al.	
3,888,350	A		6/1975	Horvath	
3,894,654	A		7/1975	Frankenberg	
3,987,891	A		10/1976	Horvath	
4,043,448	A		8/1977	Tanaka	
4,113,098	A		9/1978	Howard	
4,126,224	A		11/1978	Laauwe et al.	
4,174,034	A		11/1979	Hoo	
4,284,204	A		8/1981	Carey, Jr.	
4,364,488	A		12/1982	Anjou	
4,401,210	A		8/1983	Anjou	
4,561,544	A		12/1985	Reeve	
4,817,819	A		4/1989	Kelly	
4,844,284	A		7/1989	Drozd et al.	
D303,927	S	*	10/1989	Weber	D9/521
4,890,742	A		1/1990	Allison	
5,022,529	A	*	6/1991	Kang	A45D 40/22 206/581
5,080,222	A		1/1992	McNary	
5,082,137	A		1/1992	Weinstein	
5,275,291	A		1/1994	Sledge	
5,620,109	A		4/1997	Madden	
D398,241	S	*	9/1998	Krebs	D9/435
D399,599	S	*	10/1998	McKinnie	D27/189
5,878,887	A		3/1999	Parker et al.	
5,915,558	A		6/1999	Girvetz	
5,950,816	A		9/1999	Reid	
6,021,901	A		2/2000	Wolfe	
6,173,838	B1		1/2001	Brozell	
6,230,917	B1		5/2001	Whitnell	
6,460,693	B1		10/2002	Harrold	
D456,729	S		11/2002	Nishimura	
6,491,211	B1		12/2002	Evans et al.	
6,557,700	B1		5/2003	Wharton	
6,662,081	B1		12/2003	Jacober et al.	
6,789,677	B2		9/2004	Maietta	
7,090,079	B2		8/2006	Ehrlund	
D554,805	S	*	11/2007	Moon	D28/84
7,464,819	B2		12/2008	Maietta	
7,581,642	B2		9/2009	Knutson et al.	
7,588,149	B2		9/2009	Gelardi	
7,591,372	B2		9/2009	Gelardi et al.	
7,617,935	B2		11/2009	Reilley et al.	
7,708,142	B2		5/2010	Ehrlund	

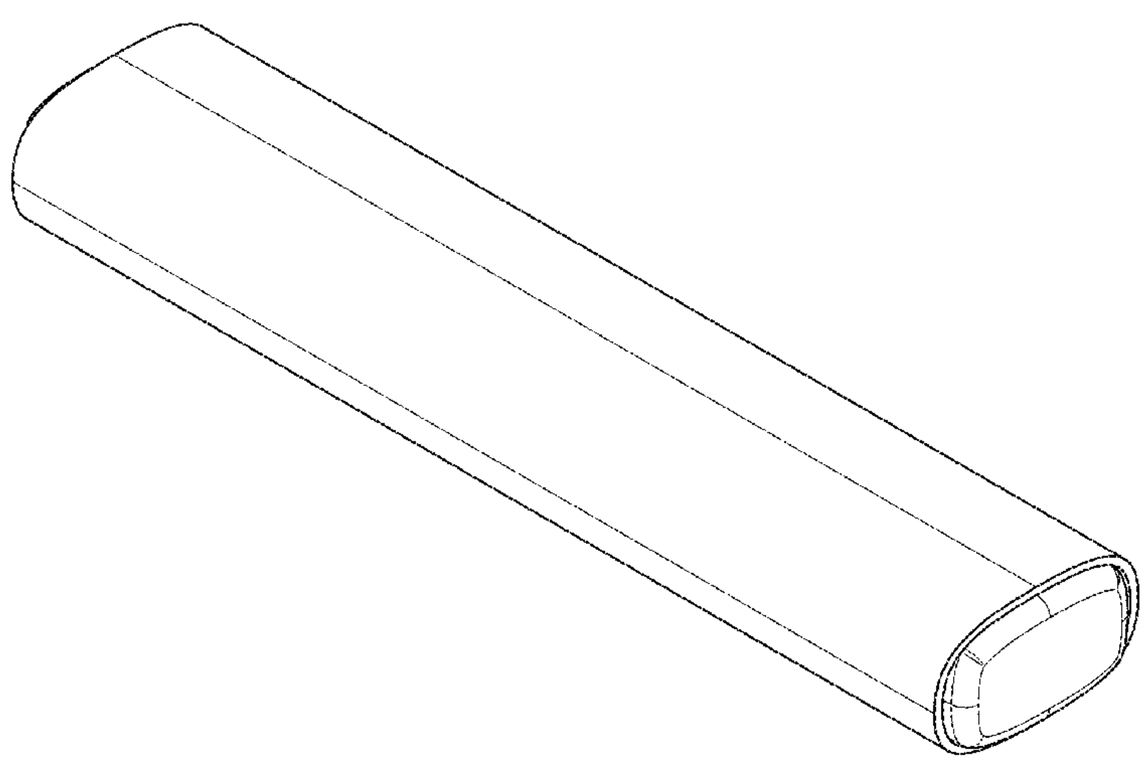

7,757,843	B2	7/2010	Katsis	
7,854,325	B2	12/2010	Bentele	
7,946,450	B2	5/2011	Gelardi et al.	
7,967,144	B2	6/2011	Sack et al.	
D648,630	S *	11/2011	Doster	D19/83
8,066,121	B2	11/2011	Sack et al.	
8,066,123	B2	11/2011	Gelardi	
D655,165	S *	3/2012	Jensen	B65D 25/10 D9/456
8,162,144	B2	4/2012	Intini	
8,205,752	B2	6/2012	Sack et al.	
8,281,930	B2	10/2012	Lee et al.	
8,453,840	B2	6/2013	Wharton	
8,499,936	B2	8/2013	Albrecht et al.	
8,602,218	B2	12/2013	Grosskopf	
8,672,134	B2	3/2014	Sprada et al.	
D720,525	S *	1/2015	Magno	D3/203.2
8,936,188	B2	1/2015	Mazurek	
9,060,919	B2	6/2015	Babineau	
D733,565	S *	7/2015	Leventhal	D28/83
D740,117	S *	10/2015	Nichols	D9/456
9,248,935	B2	2/2016	Bailey et al.	
9,346,594	B2	5/2016	Pipes et al.	
D764,285	S *	8/2016	Akana	D9/432
9,452,877	B2	9/2016	Grosskopf	
D790,964	S *	7/2017	Akana	D9/424
9,725,206	B2	8/2017	Linssen	
D800,549	S *	10/2017	Delle Cese	D9/419
9,926,125	B2	3/2018	Whitehurst	
9,938,042	B1	4/2018	Aryanpanah et al.	
9,981,788	B2	5/2018	Skinner	
9,994,353	B2	6/2018	Patwardhan et al.	
D835,338	S *	12/2018	Oligschlaeger	D27/186
2004/0055903	A1	3/2004	Nishimura	
2007/0045150	A1	3/2007	Huffer et al.	
2007/0251983	A1	11/2007	Freeze	
2010/0212686	A1 *	8/2010	Lai	A45D 33/20 132/287
2011/0067363	A1 *	3/2011	Sprada	B65D 83/0463 53/492
2011/0114512	A1	5/2011	Gelardi	
2014/0339121	A1	11/2014	Gelardi et al.	
2016/0001937	A1 *	1/2016	Skinner	B65D 50/046 206/1.5
2017/0119044	A1	5/2017	Oligschlaeger et al.	
2017/0166365	A1	6/2017	Kidd	
2018/0257827	A1	9/2018	Drosos et al.	

FOREIGN PATENT DOCUMENTS

CN	105012141	11/2015
CN	104648749	10/2017
GB	1494313	12/1977
JP	2000118578	4/2000
JP	2006001615	1/2006
JP	2008074414	4/2008
WO	199424008	10/1994
WO	200115998	3/2001
WO	2010015638	2/2010
WO	2018128188	12/2018

* cited by examiner

Primary Examiner — Catherine S Posthauer
Assistant Examiner — Alison M Ofstun
(74) *Attorney, Agent, or Firm* — Adam K. Sacharoff; Much Shelist, P.C.

(57) **CLAIM**

The ornamental design for a container tray assembly with child resistant sleeve, as shown and described.

DESCRIPTION

FIG. **1** is a top, front, left side, perspective view for a container tray assembly with child resistant sleeve showing the new design;
FIG. **2** is a bottom rear right side perspective view thereof;
FIG. **3** is a top plan view thereof;
FIG. **4** is a bottom plan view thereof;
FIG. **5** is a front elevation view thereof;
FIG. **6** is a rear elevation view thereof;
FIG. **7** is a left side view thereof;
FIG. **8** is a right side view thereof;
FIG. **9** is a top, front, left side, perspective view thereof, shown in a position of use;
FIG. **10** is a bottom side perspective view thereof;
FIG. **11** is another top front side perspective view thereof;
FIG. **12** is a top plan view thereof;
FIG. **13** is a bottom plan view thereof;
FIG. **14** is a front elevation view thereof;
FIG. **15** is a rear elevation view thereof;
FIG. **16** is a left side view thereof;
FIG. **17** is a right side view thereof;
FIG. **18** is a top, front, left side, perspective view thereof;
FIG. **19** is a bottom side perspective view thereof;
FIG. **20** is a top plan view thereof;
FIG. **21** is a bottom plan view thereof;
FIG. **22** is a left side view thereof;
FIG. **23** is a right side view thereof;
FIG. **24** is a front elevation view thereof;
FIG. **25** is a rear elevation view thereof;
FIG. **26** is a top, front, left side, perspective view of a second embodiment of a container tray assembly with child resistant sleeve;
FIG. **27** is a bottom rear right side perspective view thereof;
FIG. **28** is a top plan view thereof;
FIG. **29** is a bottom plan view thereof;
FIG. **30** is a front elevation view thereof;
FIG. **31** is a rear elevation view thereof;
FIG. **32** is a left side view thereof;
FIG. **33** is a right side view thereof;
FIG. **34** is a top, front, left side, perspective view thereof, shown in a position of use;
FIG. **35** is a bottom side perspective view thereof;
FIG. **36** is another top front side perspective view thereof;
FIG. **37** is another bottom side perspective view thereof;
FIG. **38** is a top plan view thereof;
FIG. **39** is a bottom plan view thereof;
FIG. **40** is a front elevation view thereof;
FIG. **41** is a rear elevation view thereof;
FIG. **42** is a left side view thereof;
FIG. **43** is a right side view thereof;
FIG. **44** is a top, front, left side, perspective, exploded view thereof;
FIG. **45** is a bottom side perspective view thereof;
FIG. **46** is a top plan view thereof;
FIG. **47** is a bottom plan view thereof;
FIG. **48** is a front elevation view thereof;
FIG. **49** is a rear elevation view thereof;
FIG. **50** is a left side view thereof; and,
FIG. **51** is a right side view thereof.
The broken lines are shown for the purpose of illustrating portions of the article which form no part of the claimed design.

1 Claim, 37 Drawing Sheets

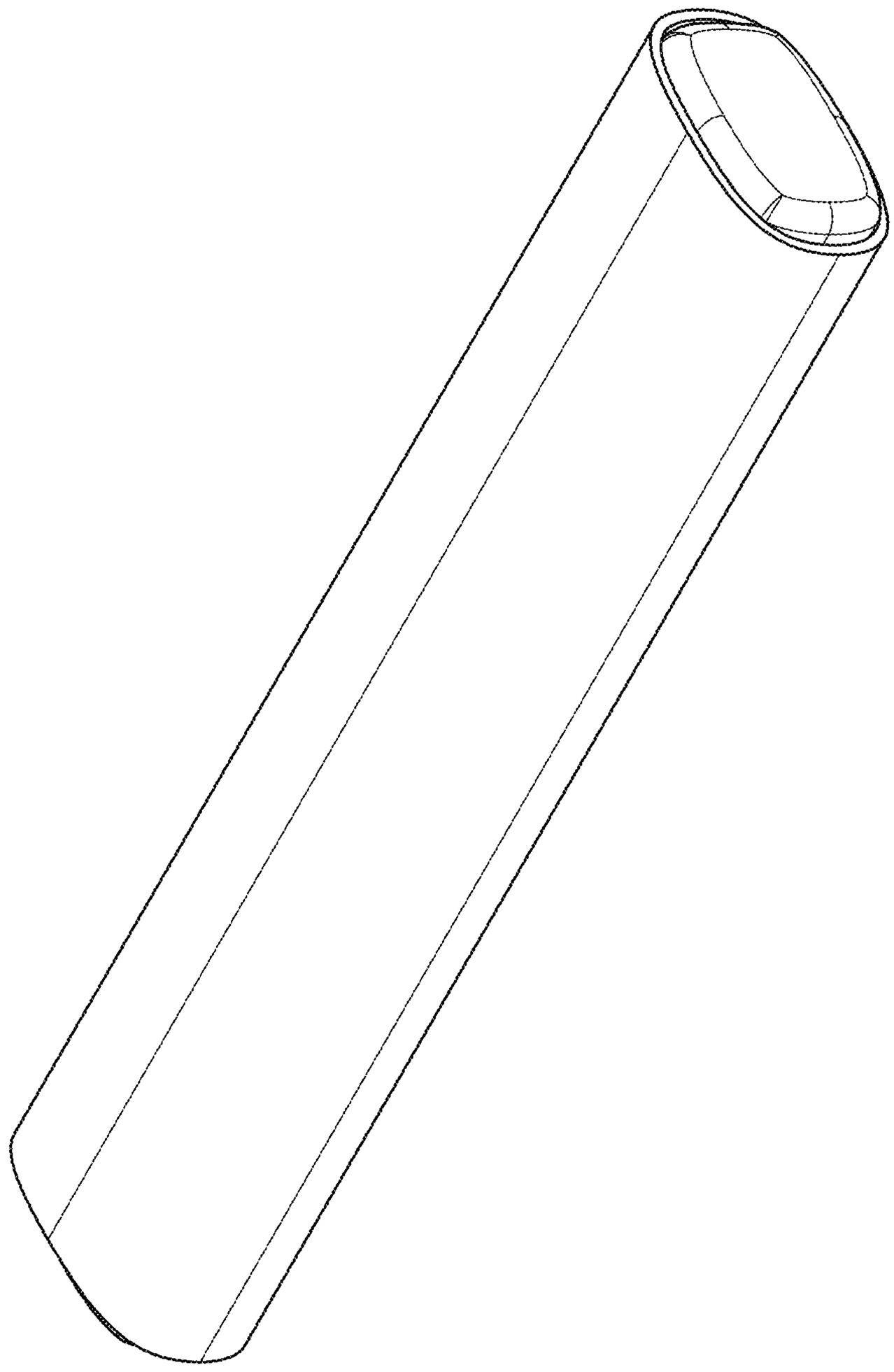

FIG. 1

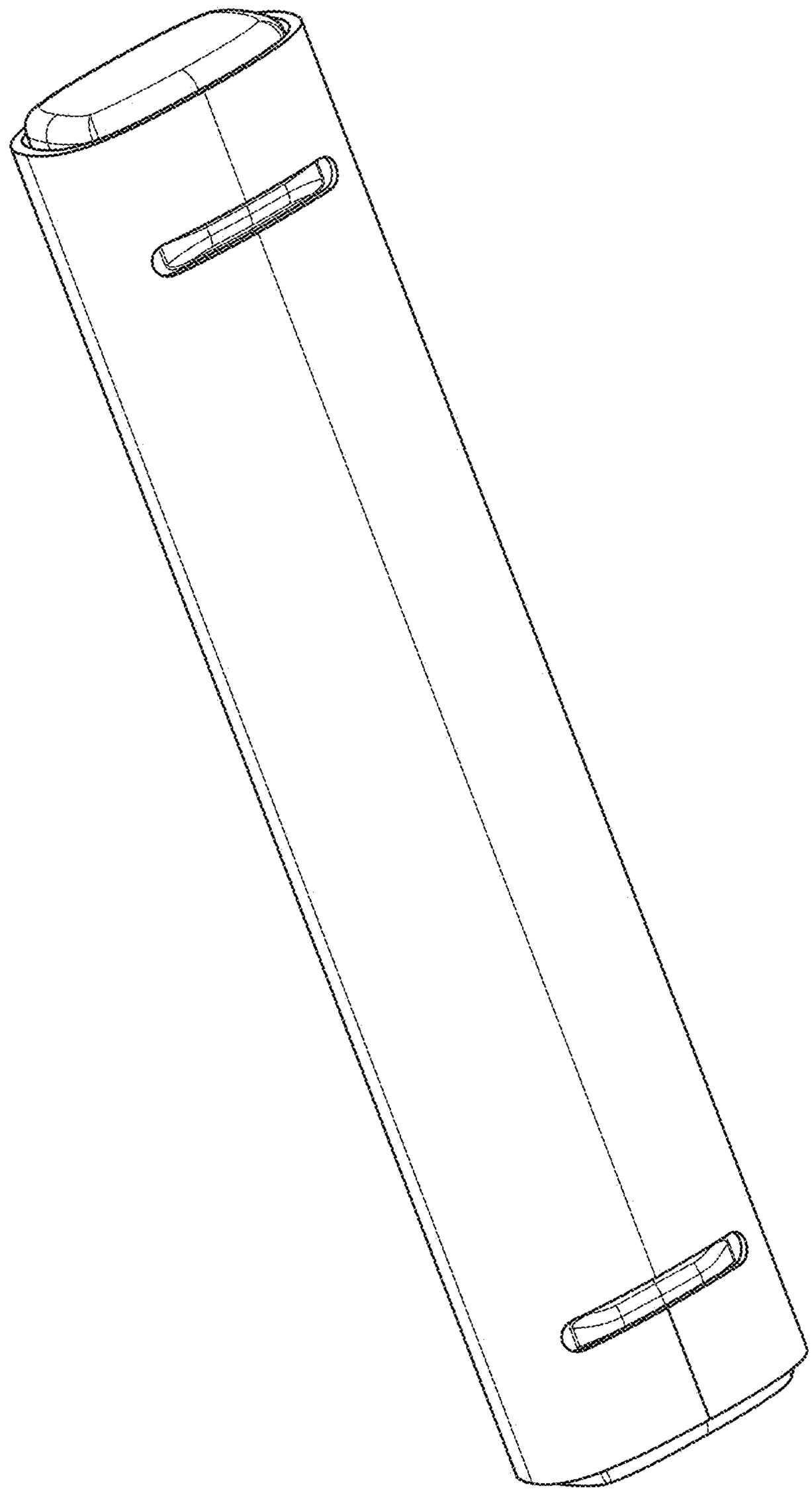

FIG. 2

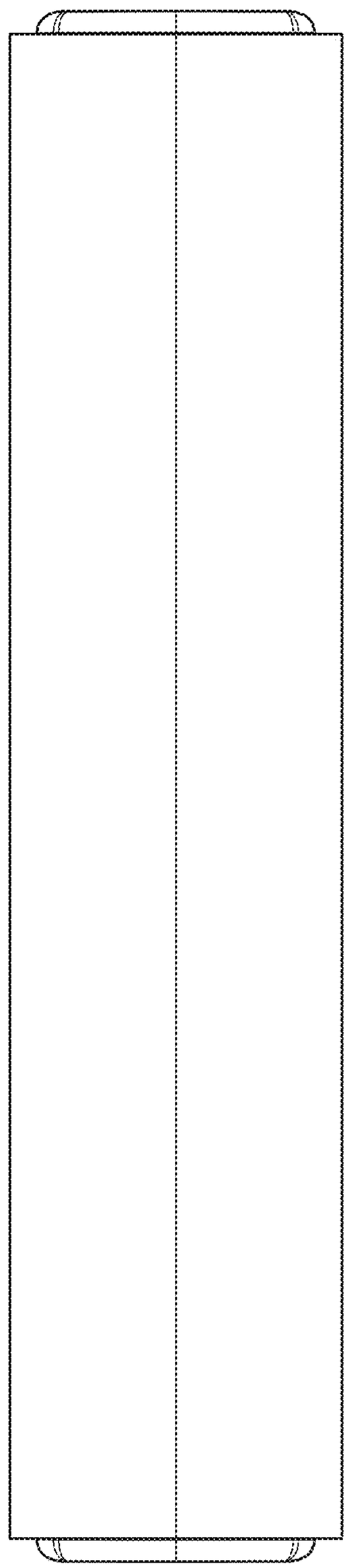

FIG. 3

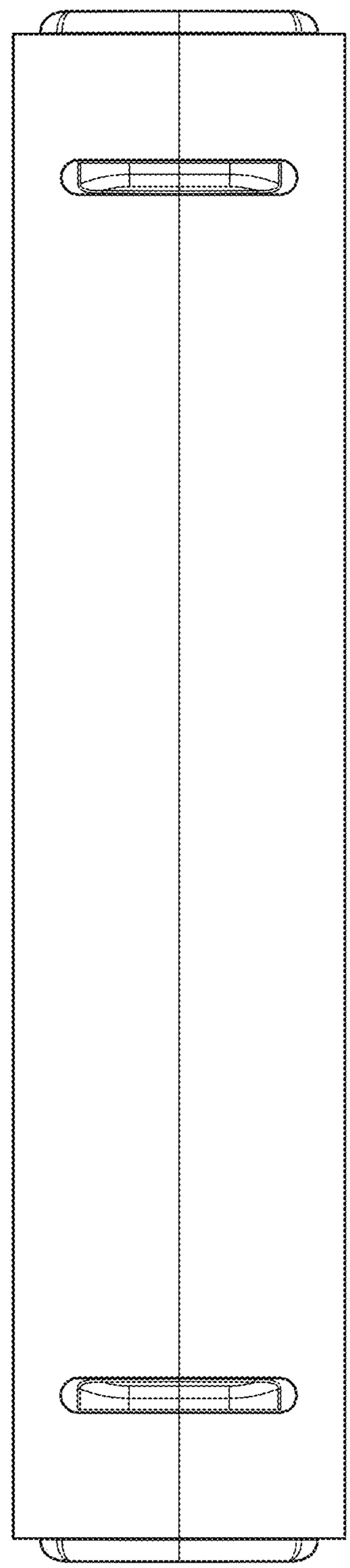

FIG. 4

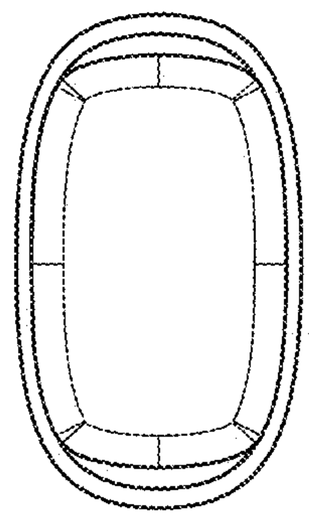

FIG. 6

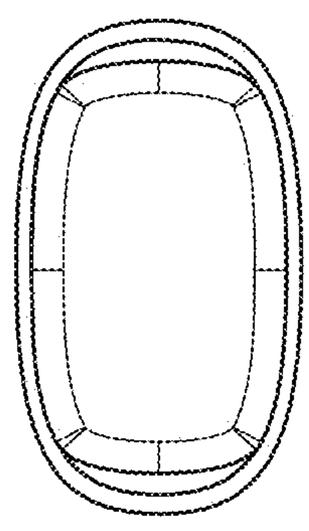

FIG. 5

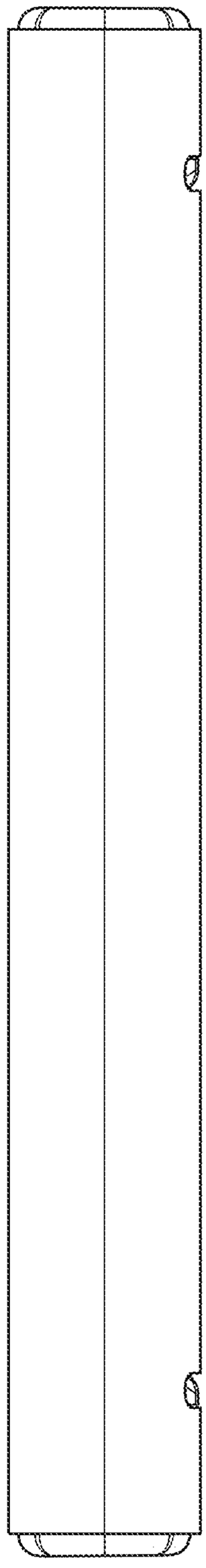

FIG. 7

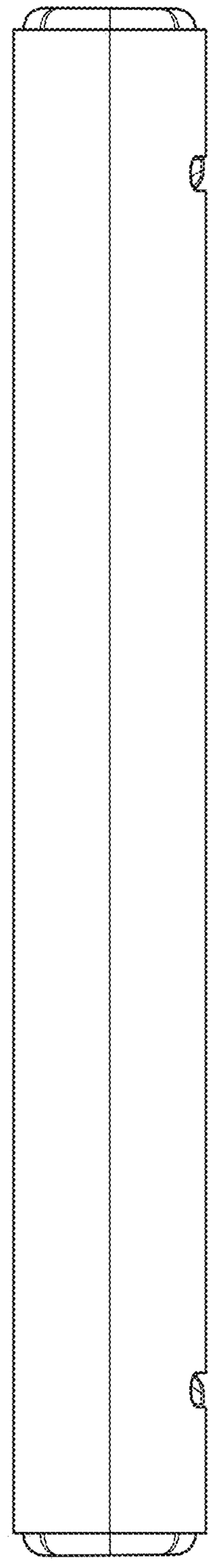

FIG. 8

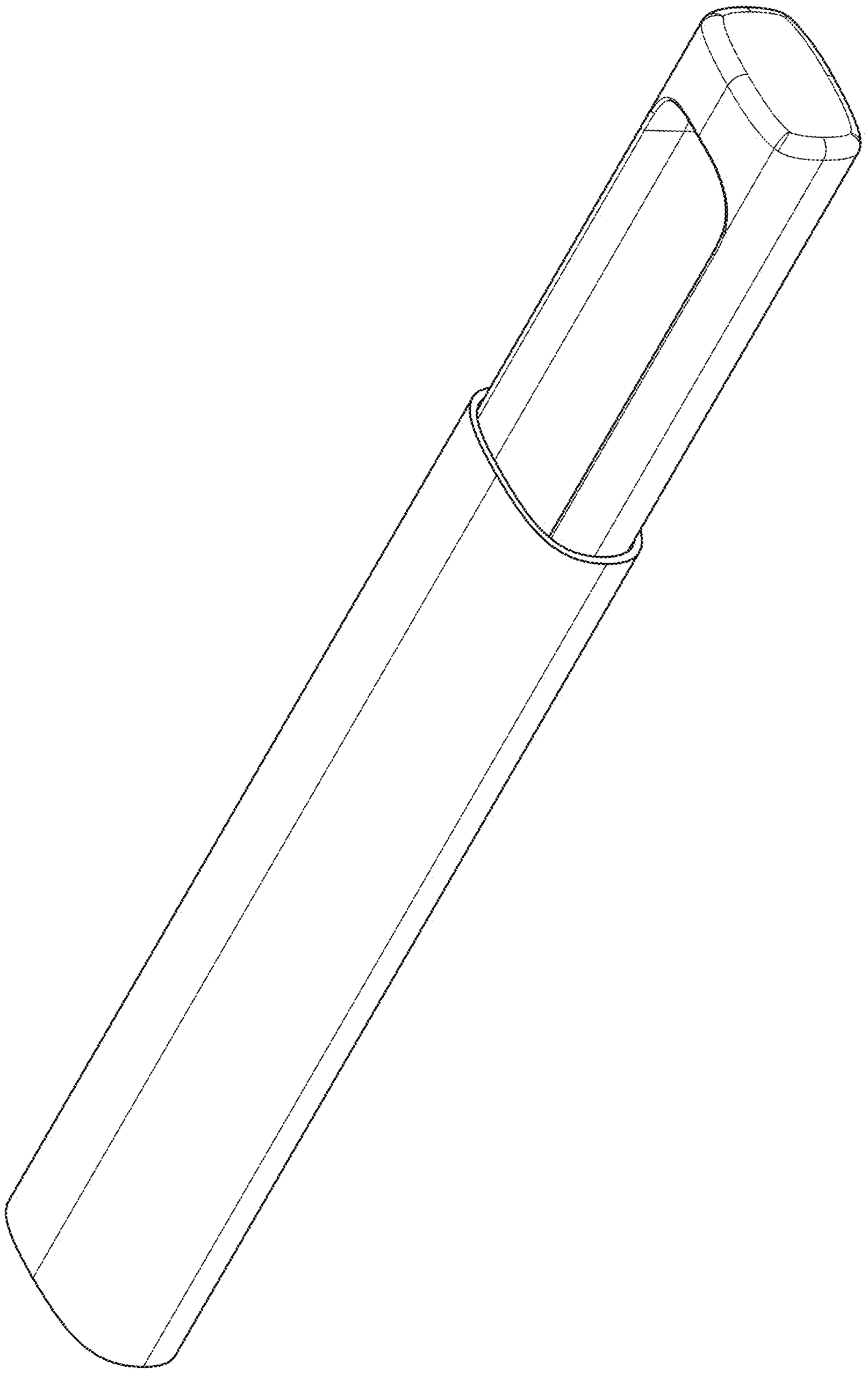

FIG. 9

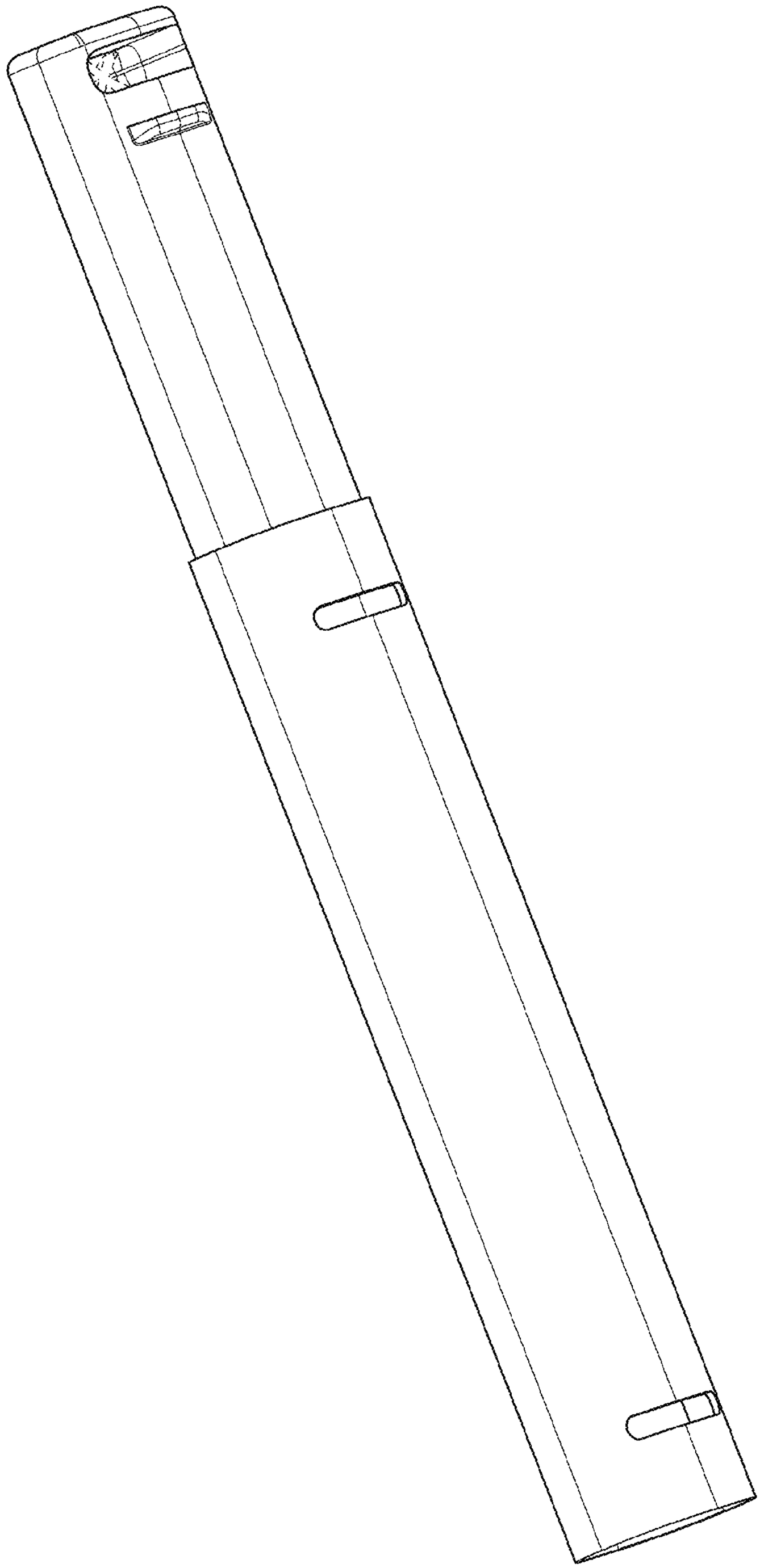

FIG. 10

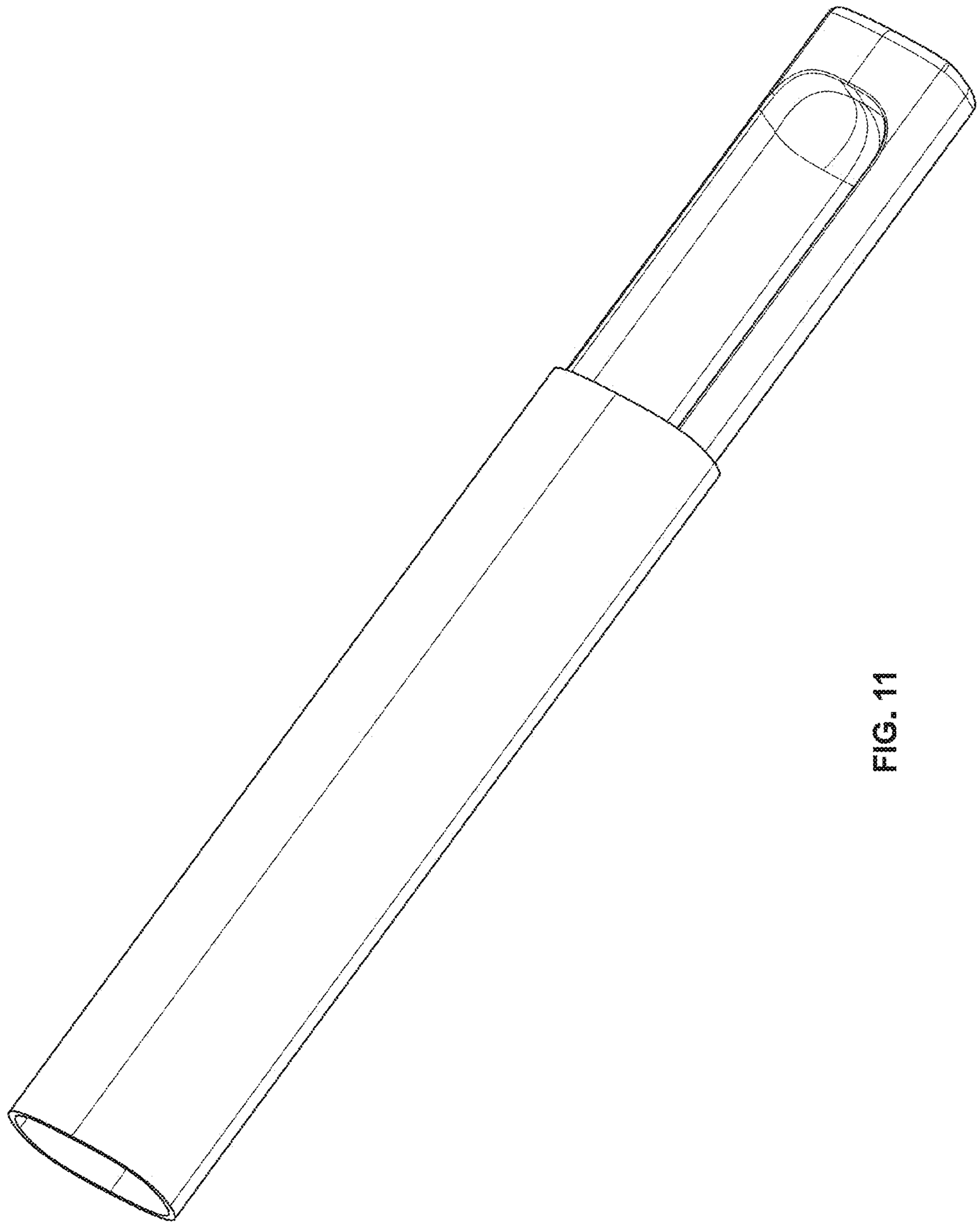

FIG. 11

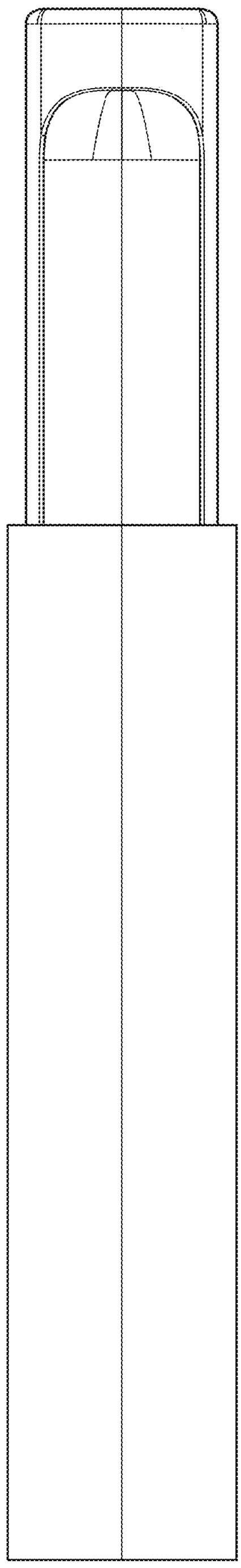

FIG. 12

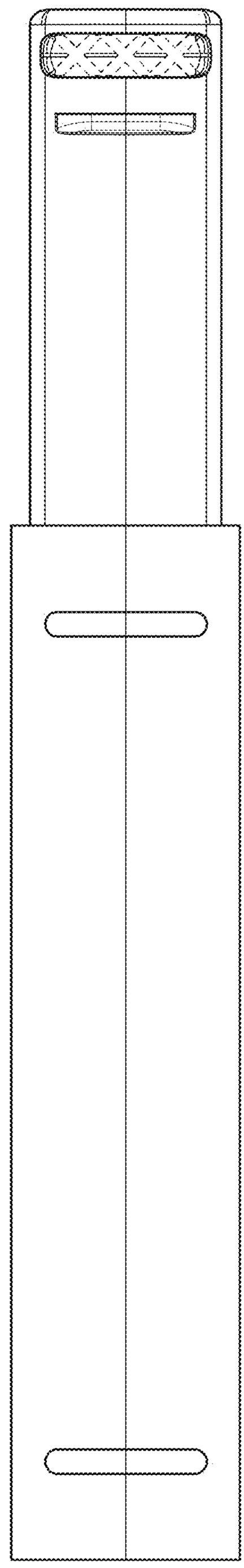

FIG. 13

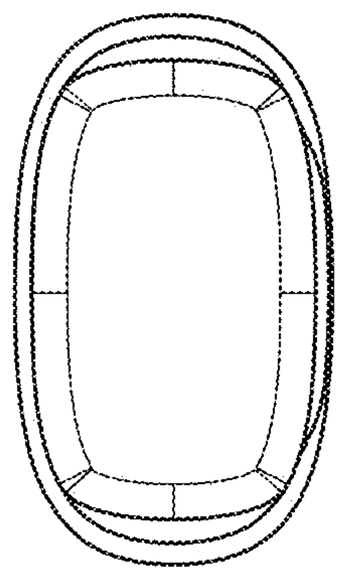

FIG. 15

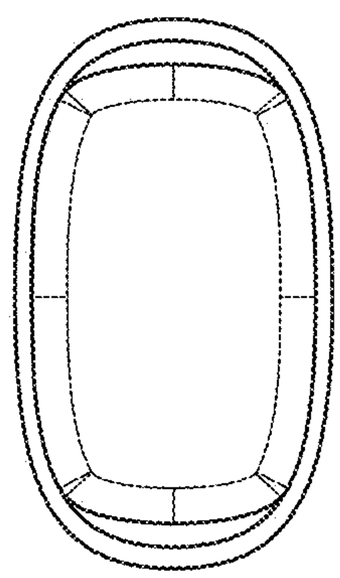

FIG. 14

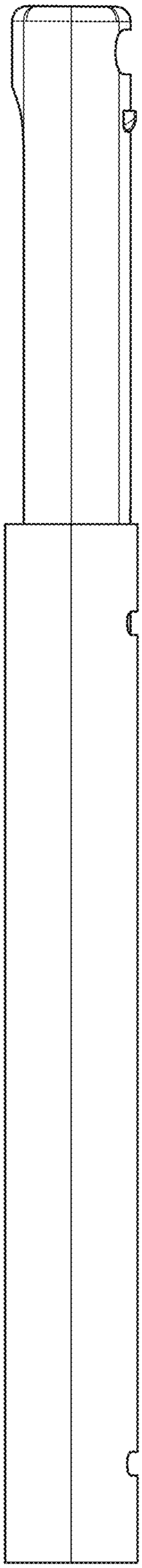

FIG. 16

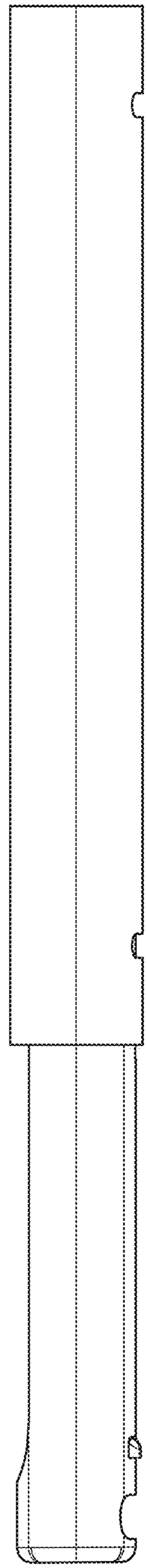

FIG. 17

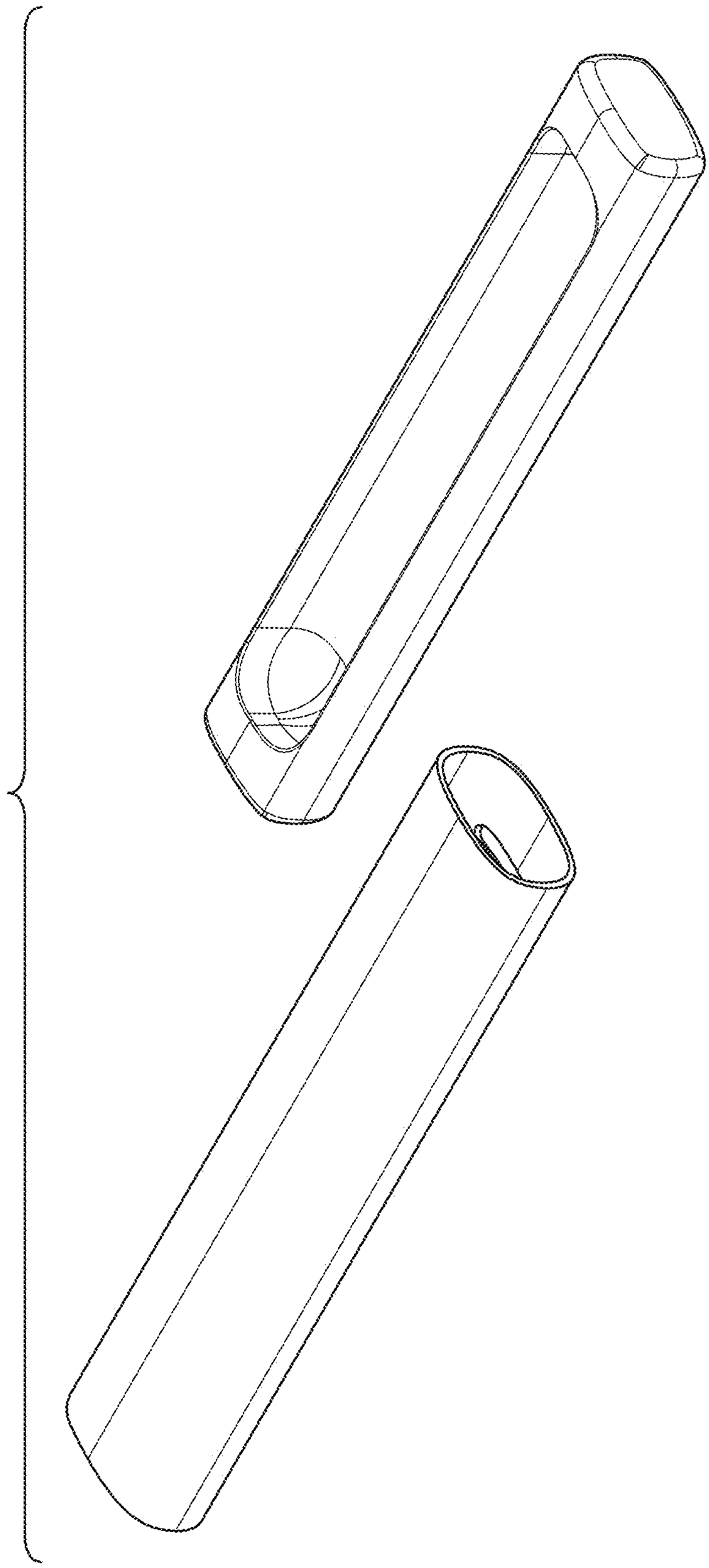

FIG. 18

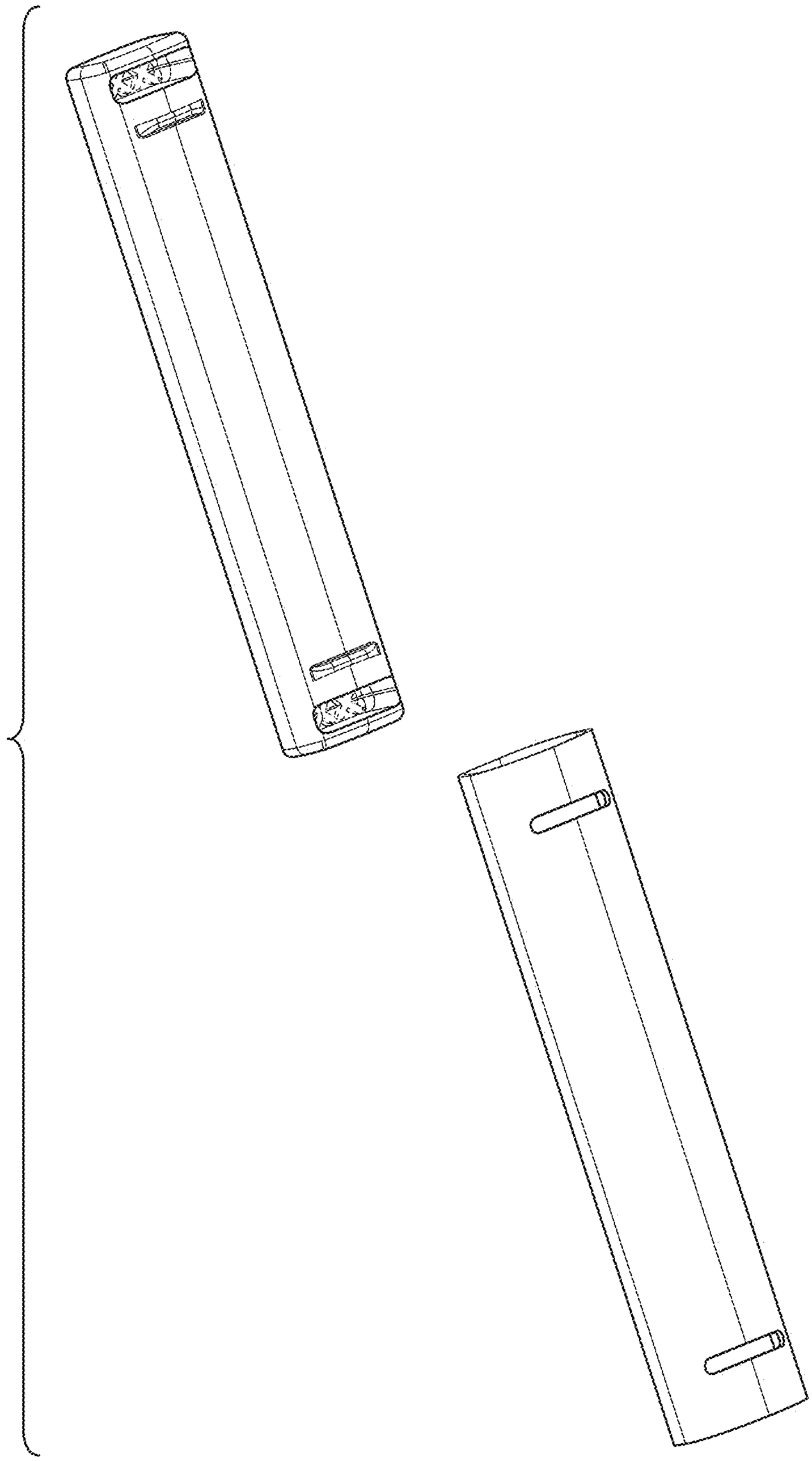

FIG. 19

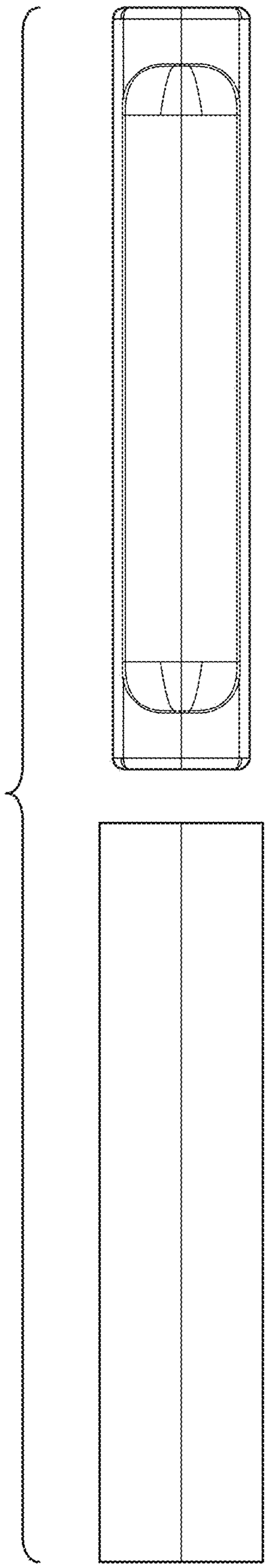

FIG. 20

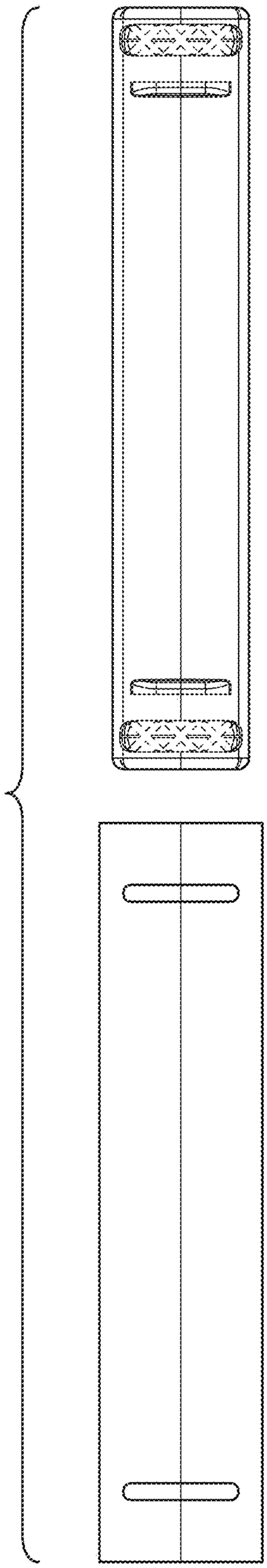

FIG. 21

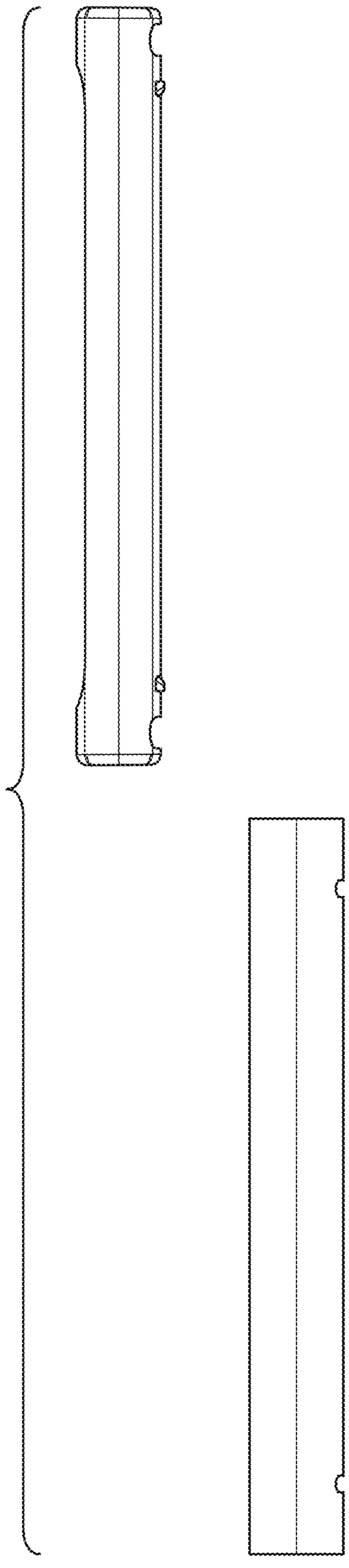

FIG. 22

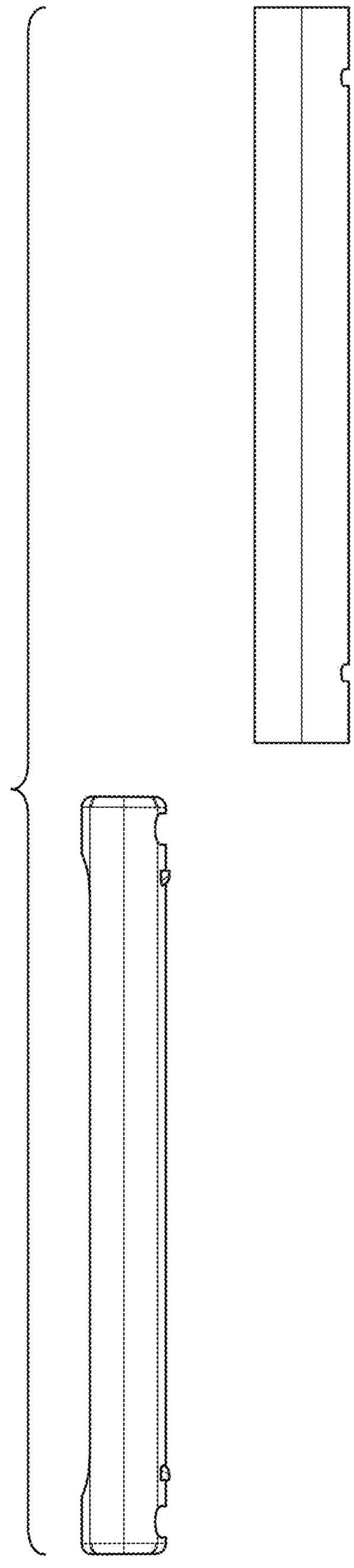

FIG. 23

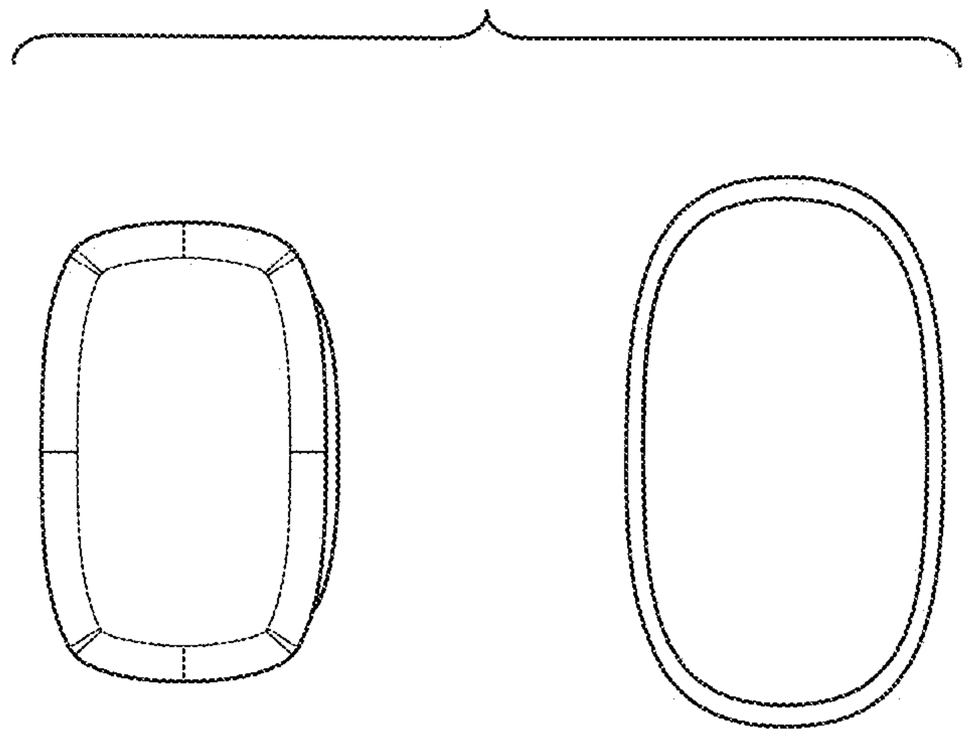

FIG. 25

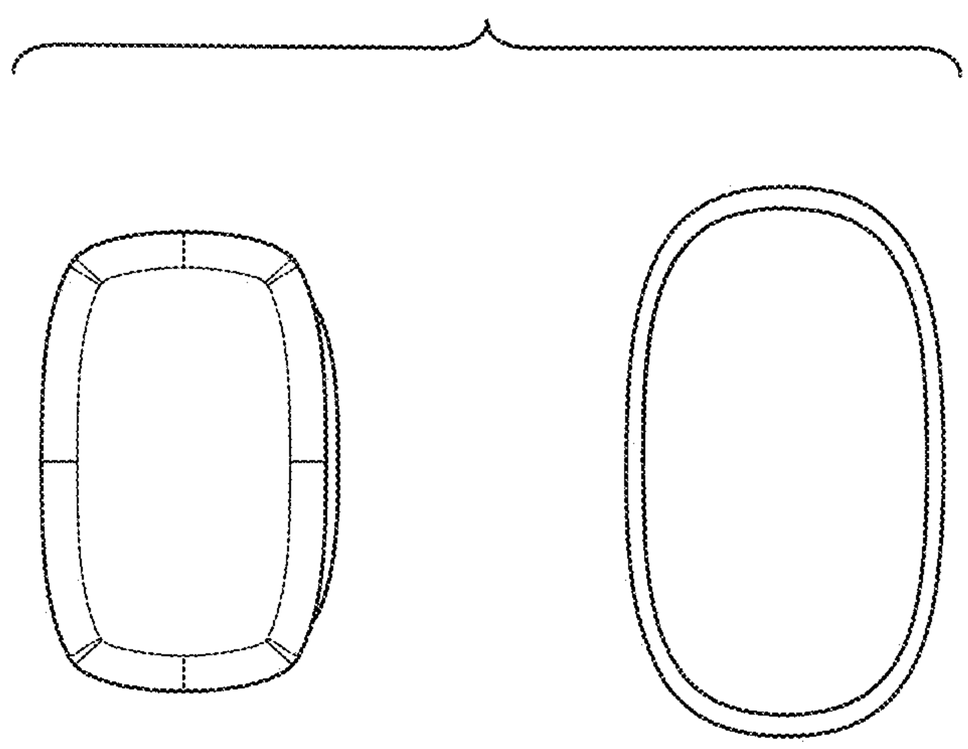

FIG. 24

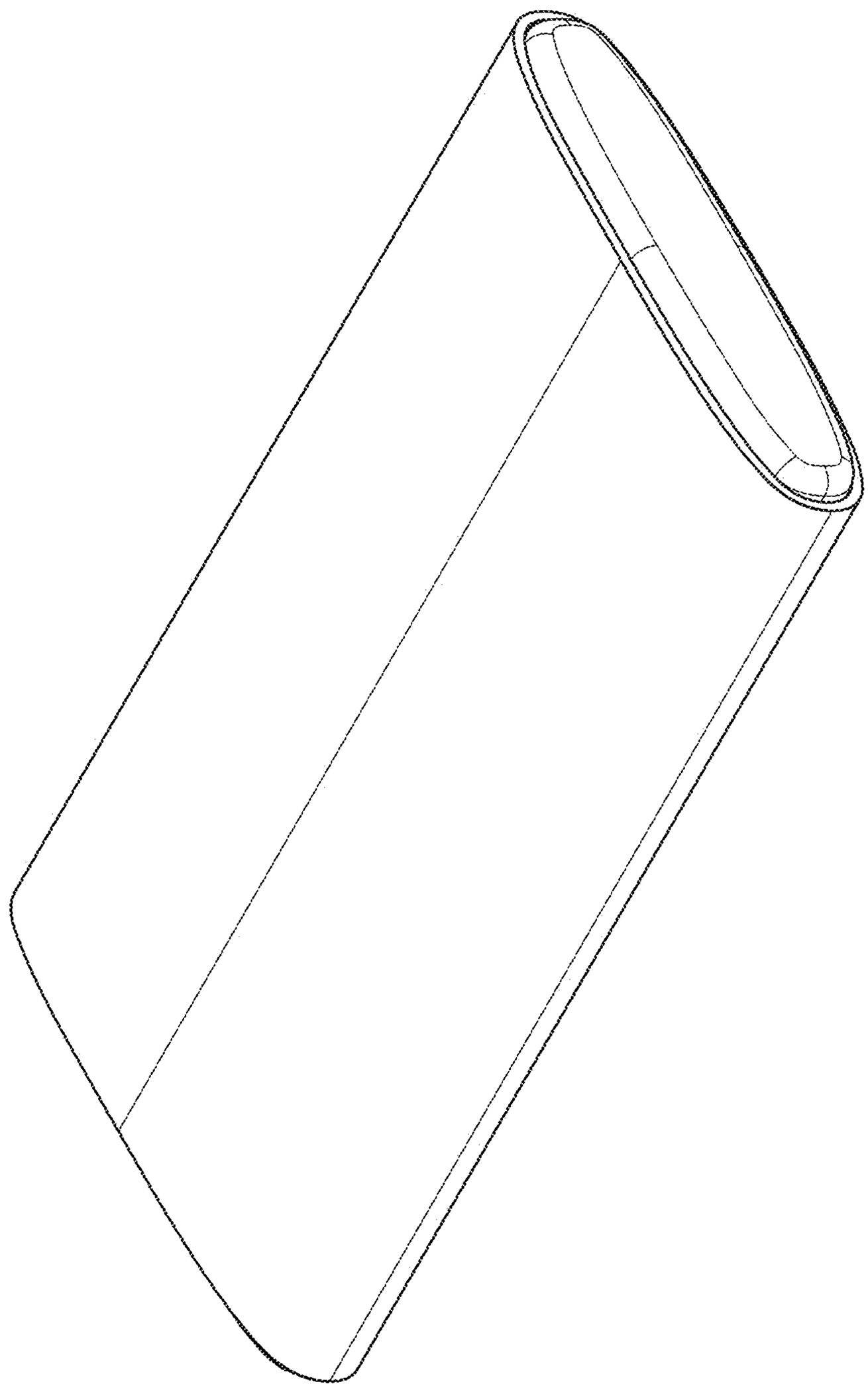

FIG. 26

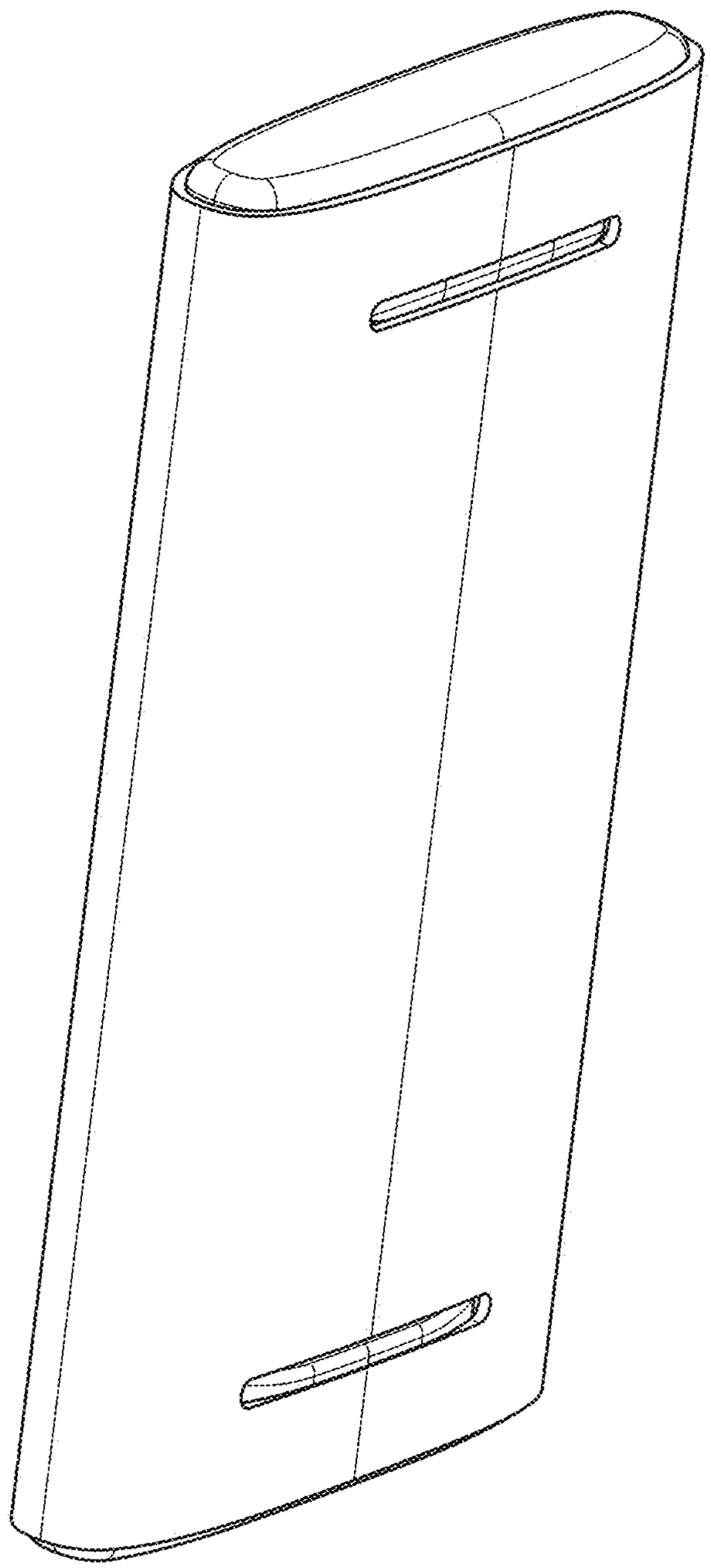

FIG. 27

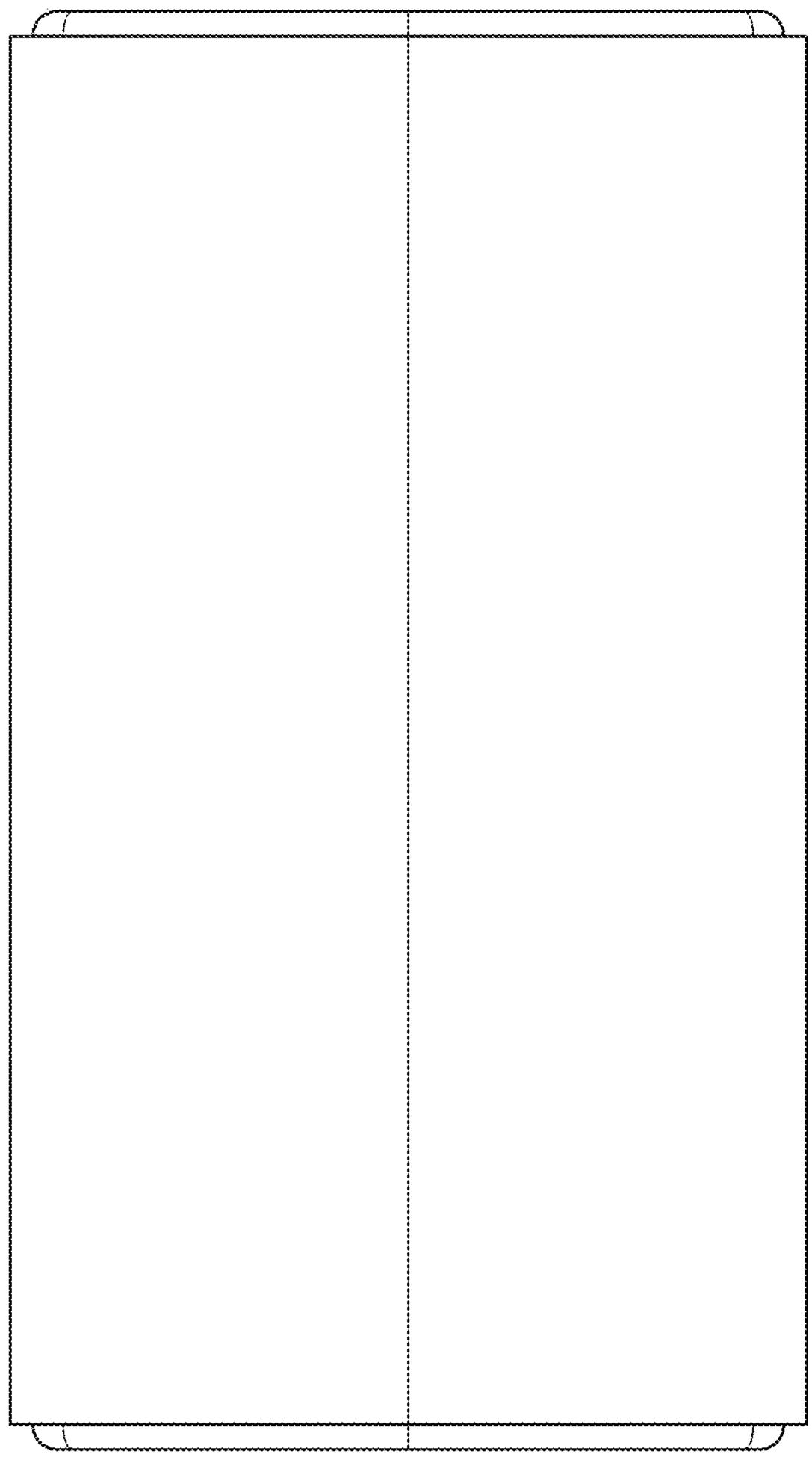

FIG. 28

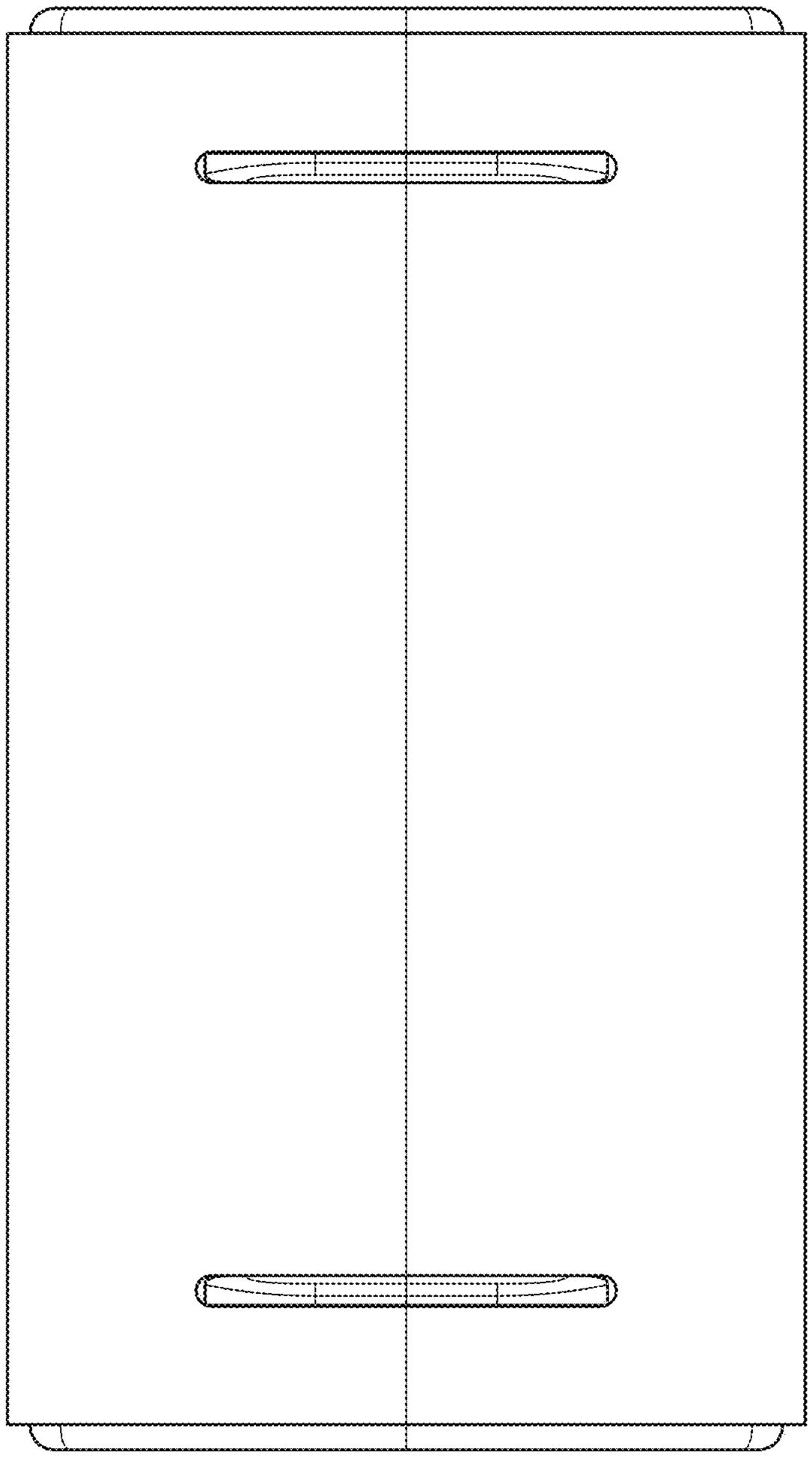

FIG. 29

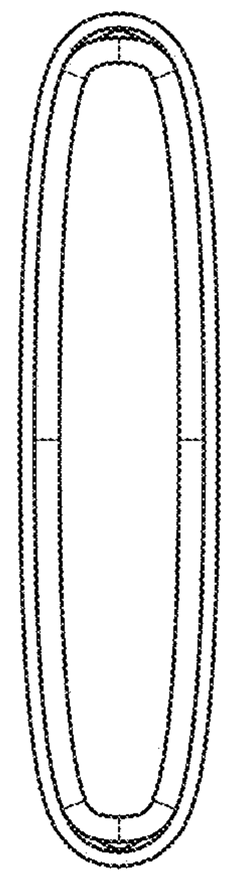

FIG. 31

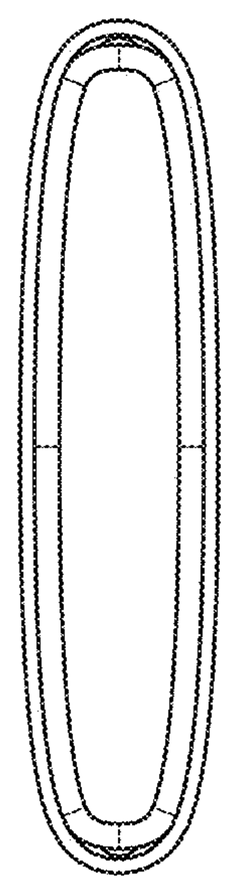

FIG. 30

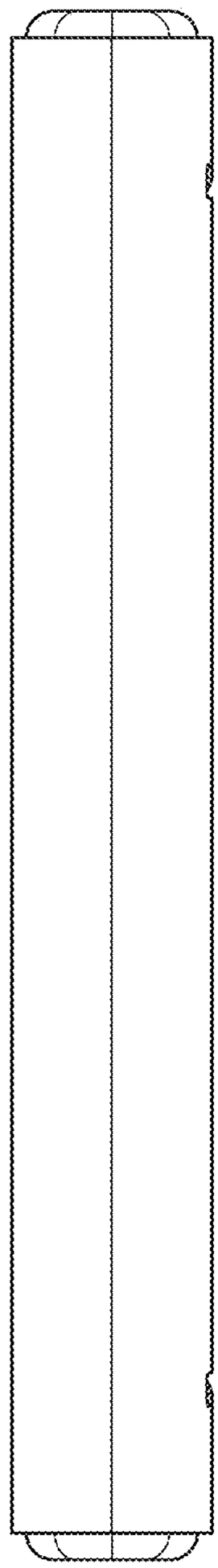

FIG. 32

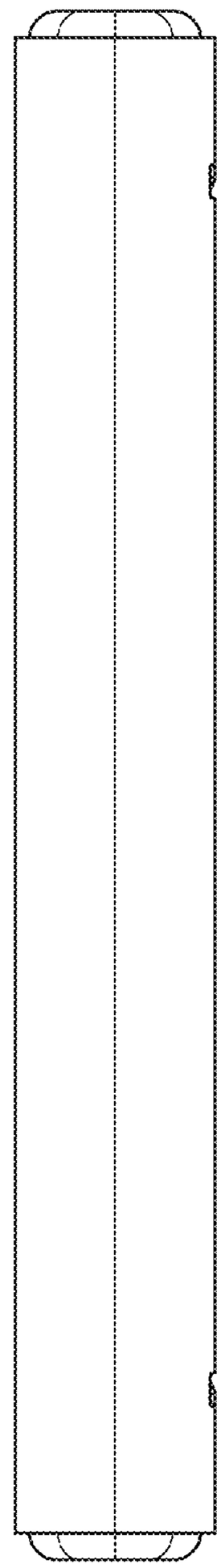

FIG. 33

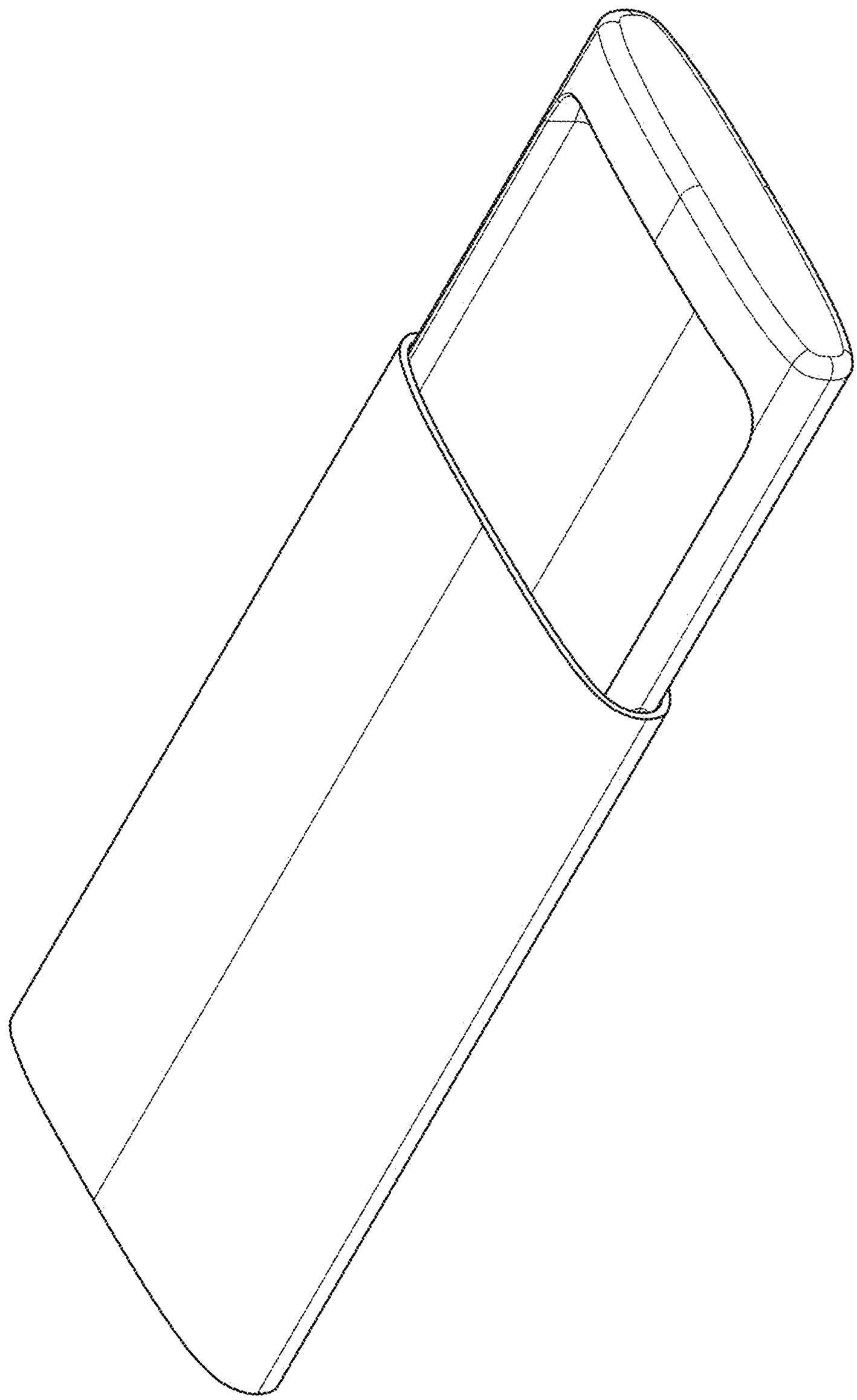

FIG. 34

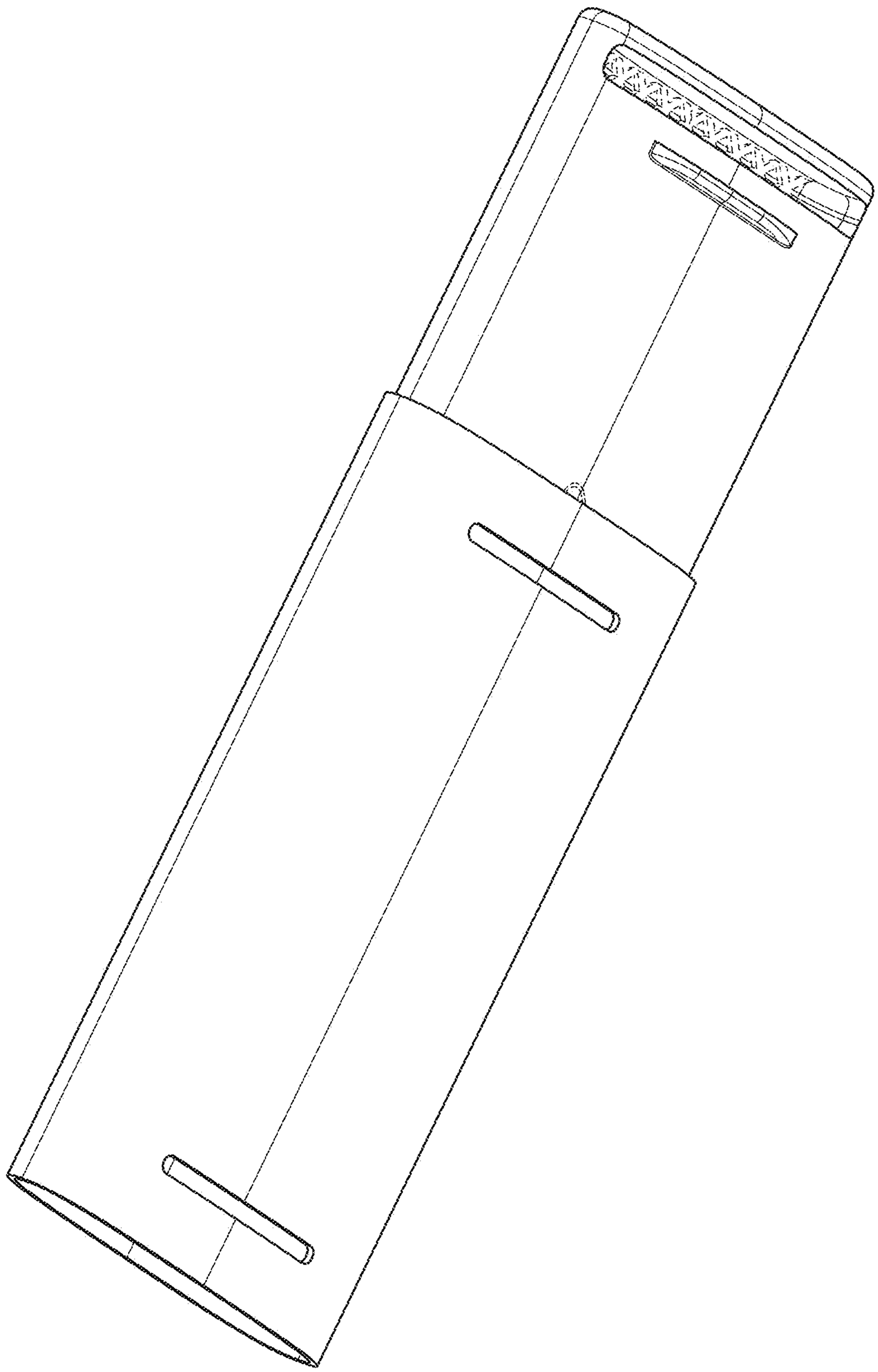

FIG. 35

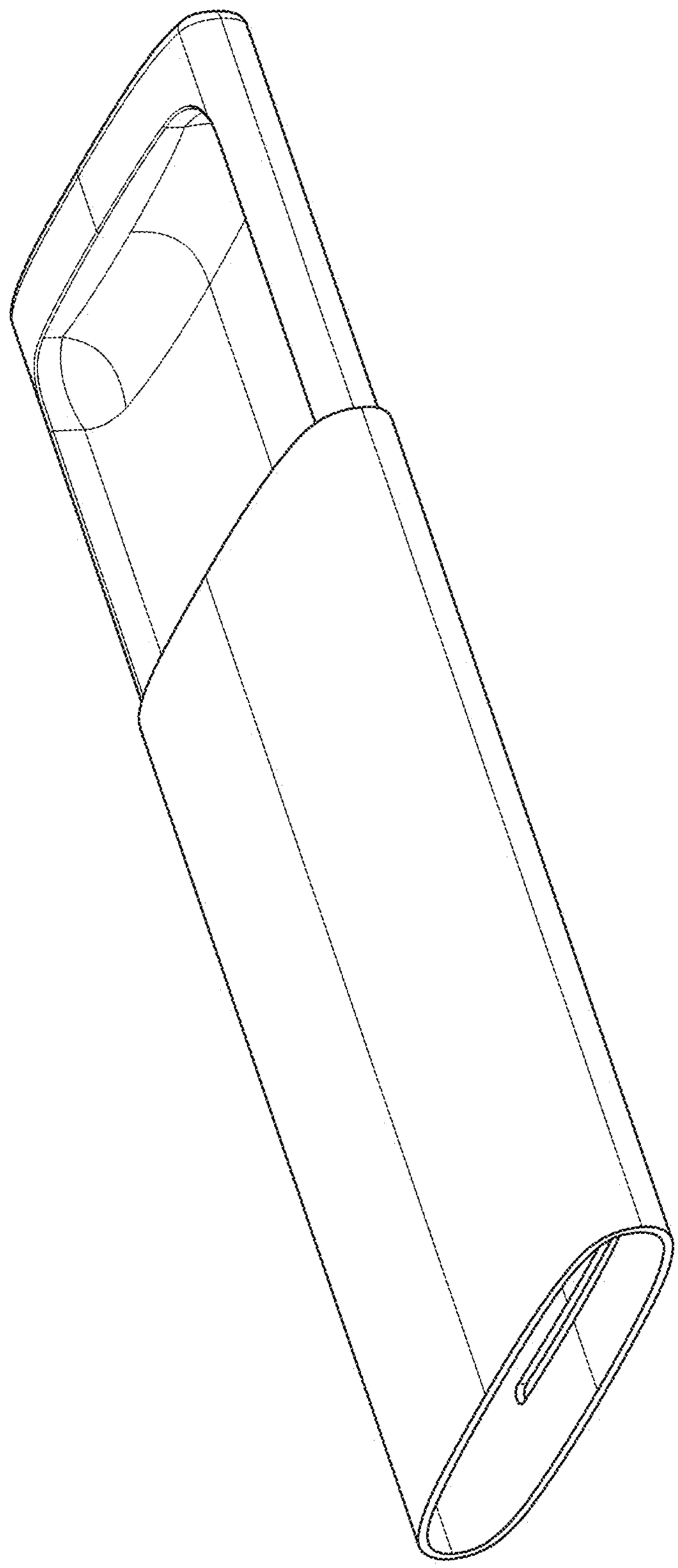

FIG. 36

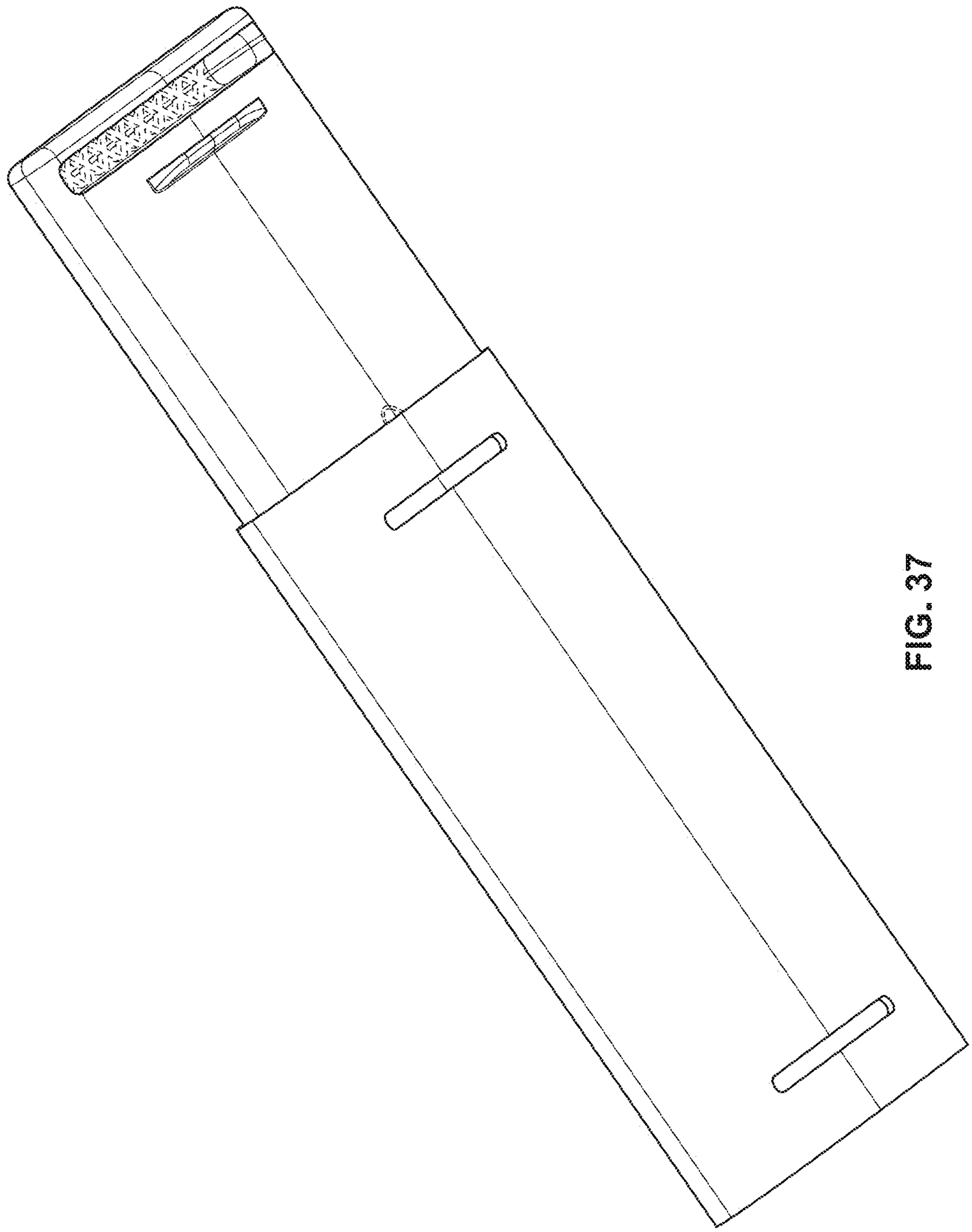

FIG. 37

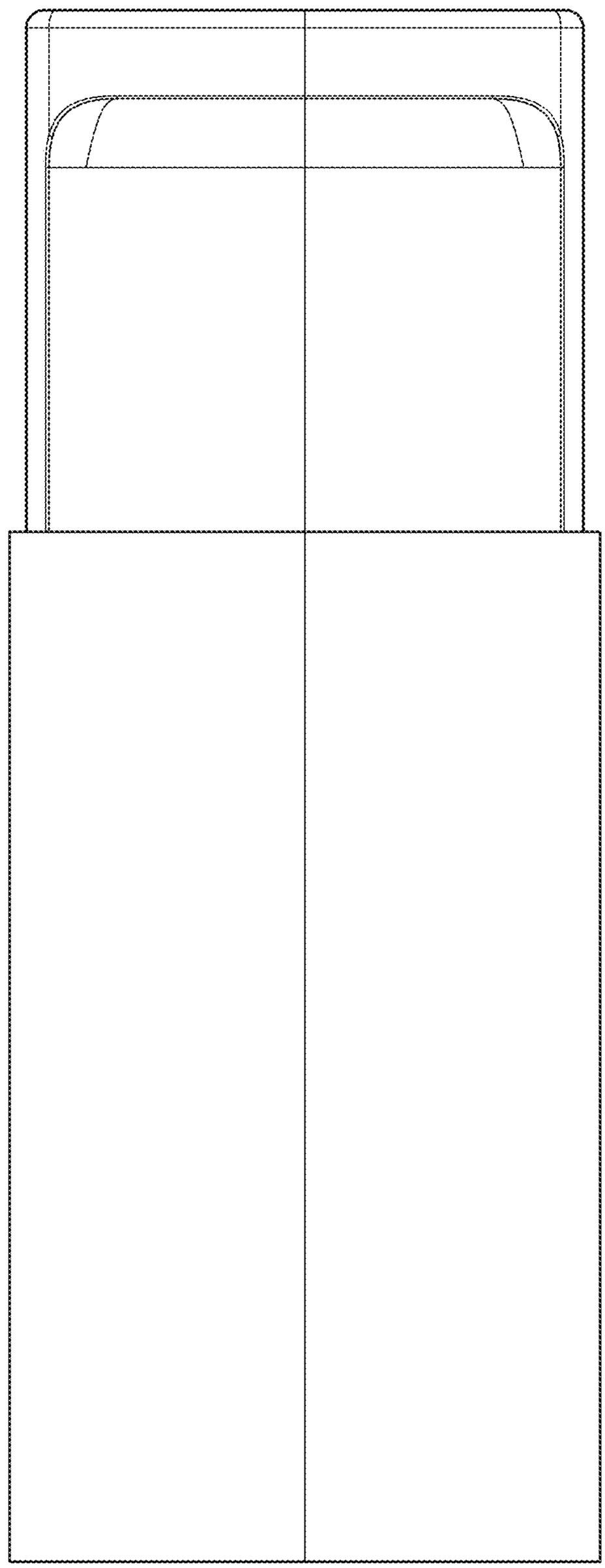

FIG. 38

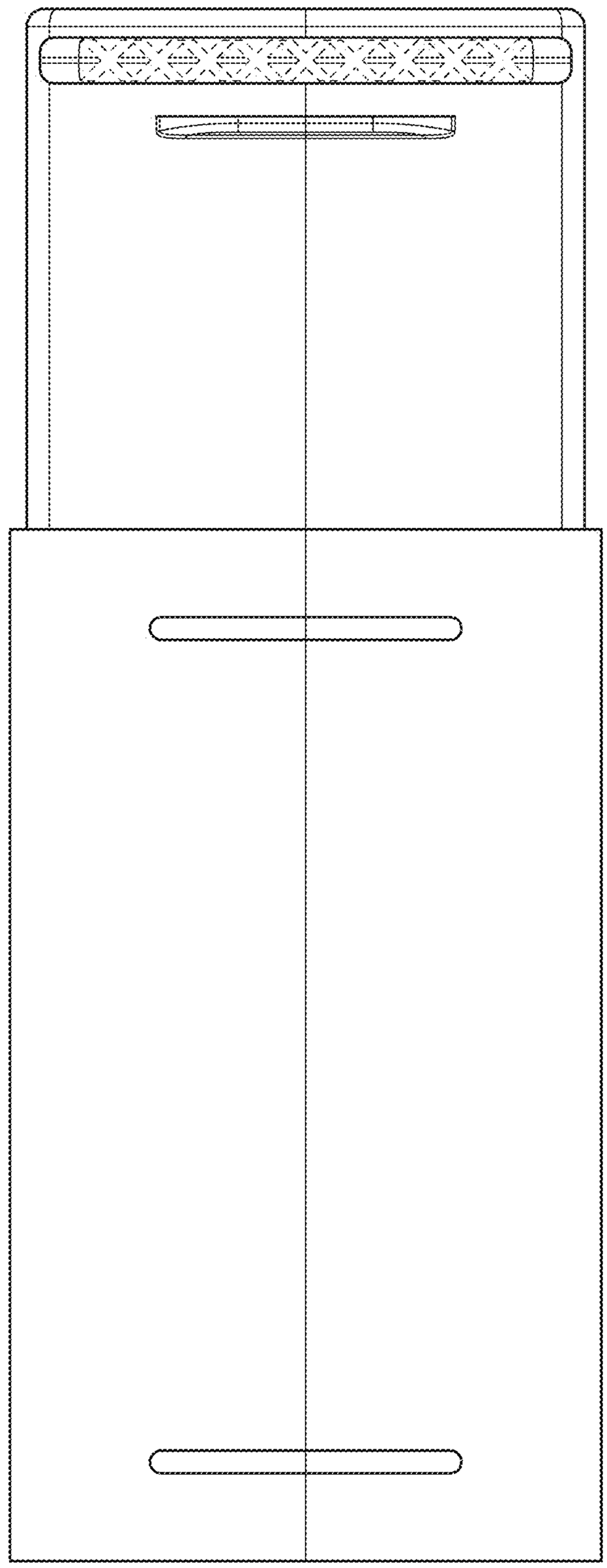

FIG. 39

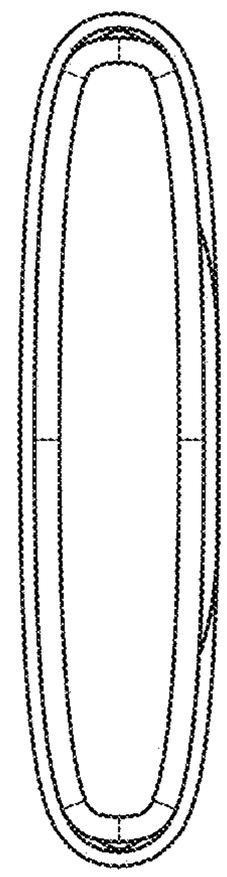

FIG. 41

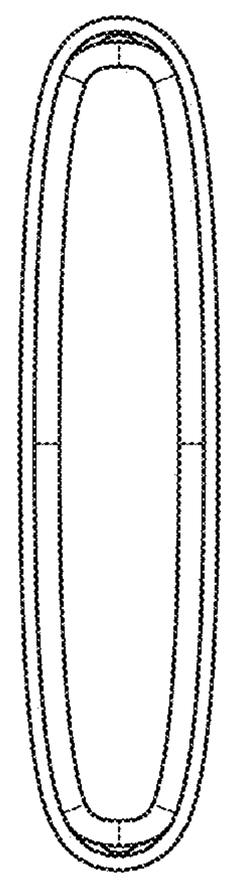

FIG. 40

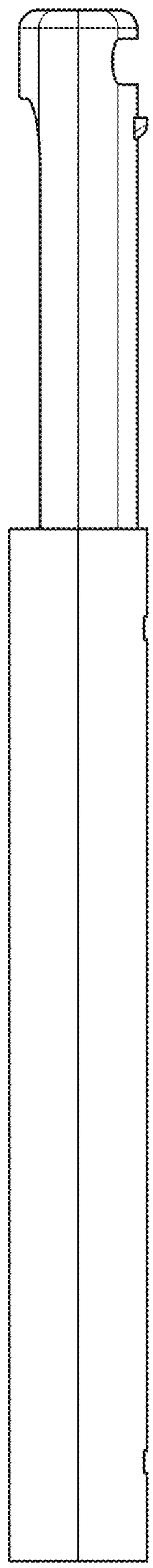

FIG. 42

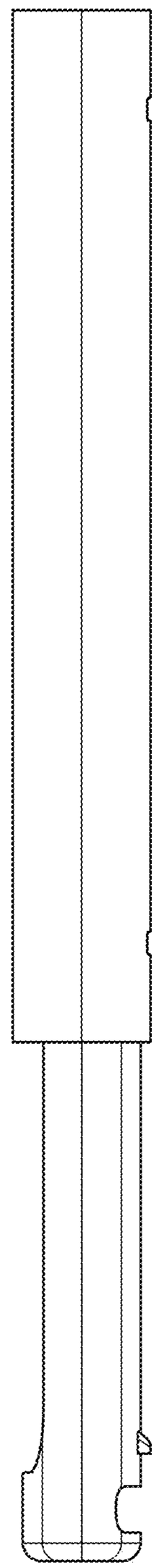

FIG. 43

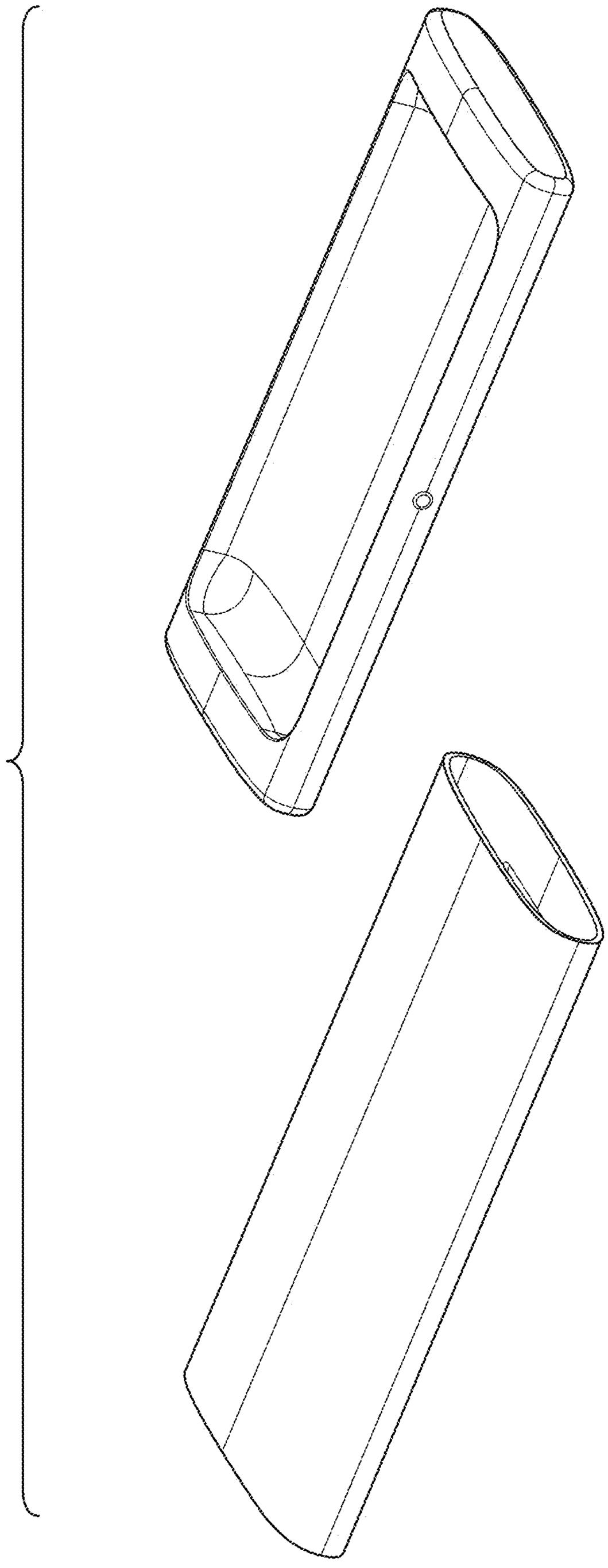

FIG. 44

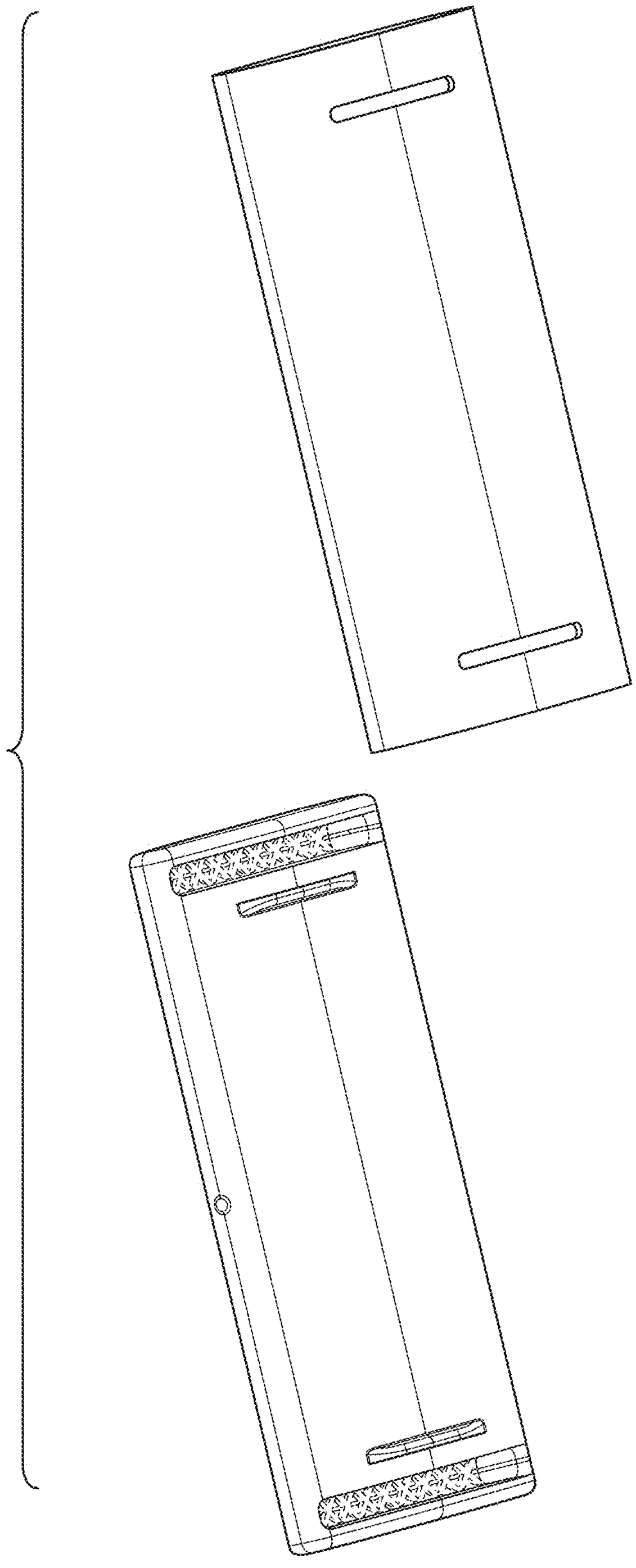

FIG. 45

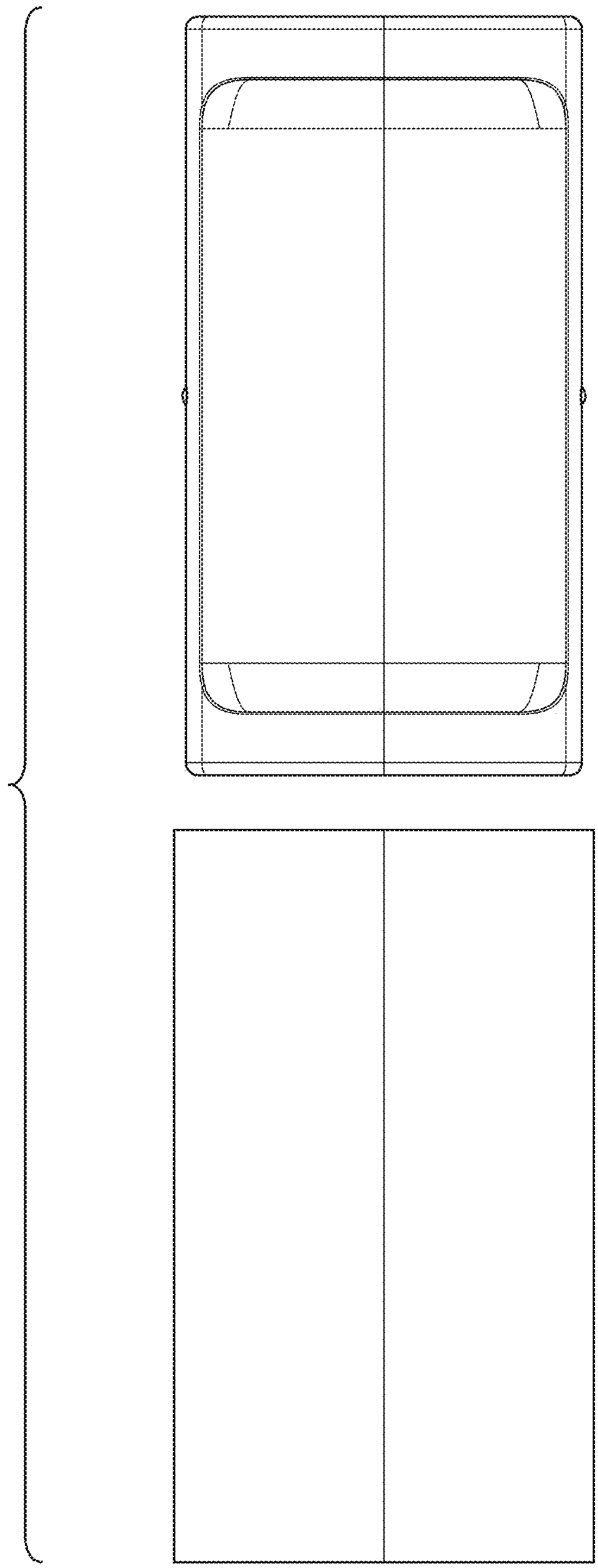

FIG. 46

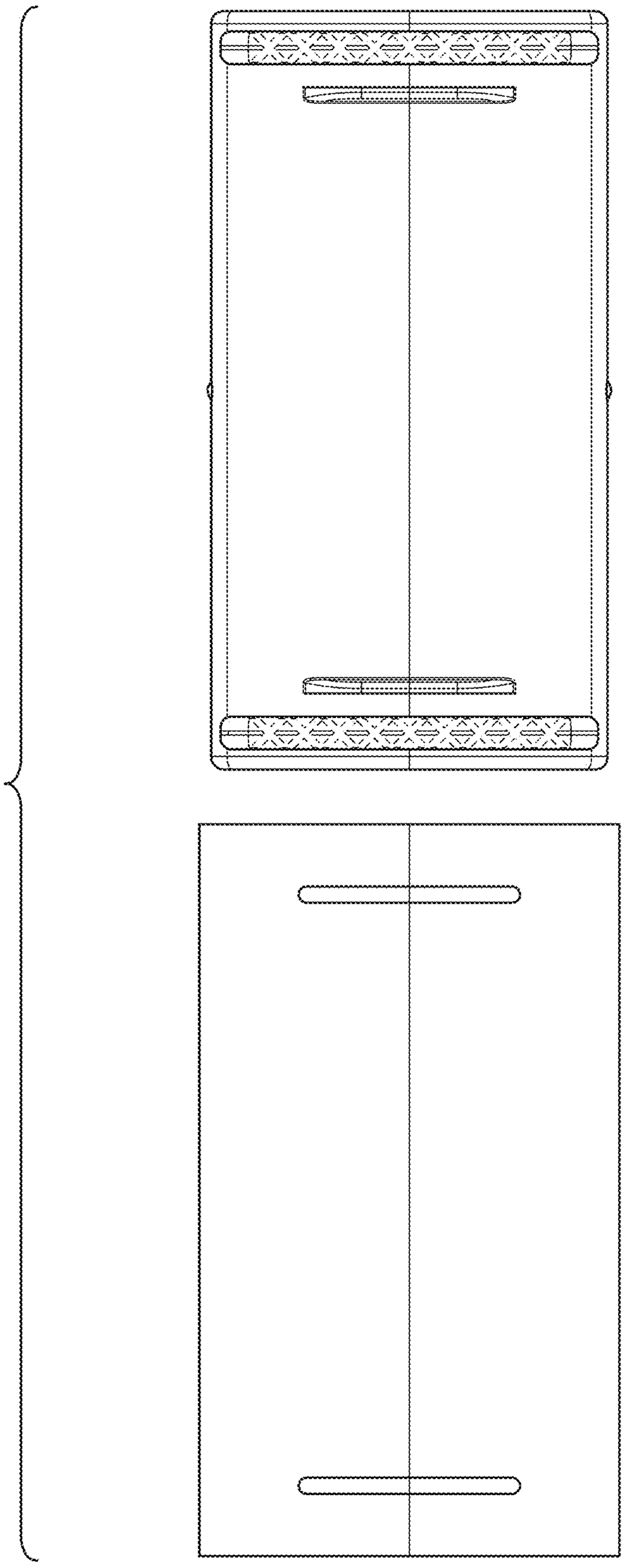

FIG. 47

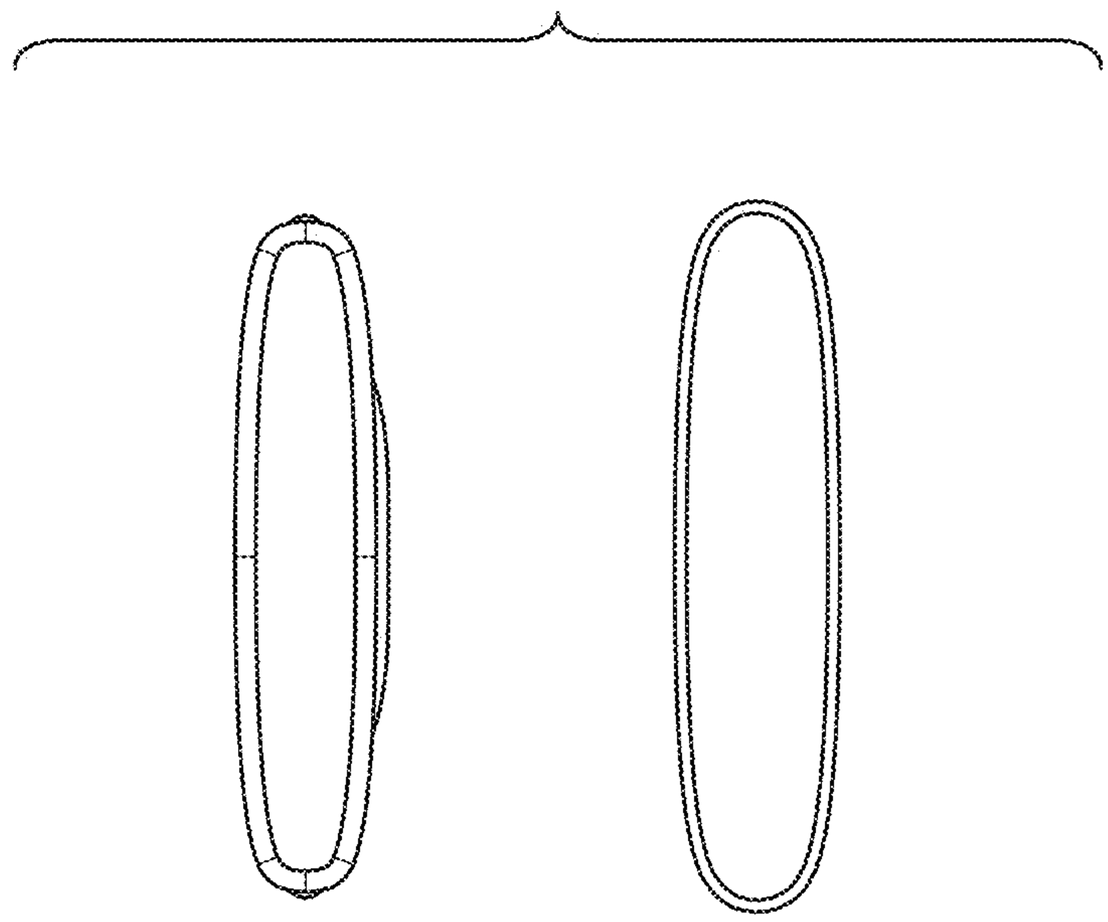

FIG. 49

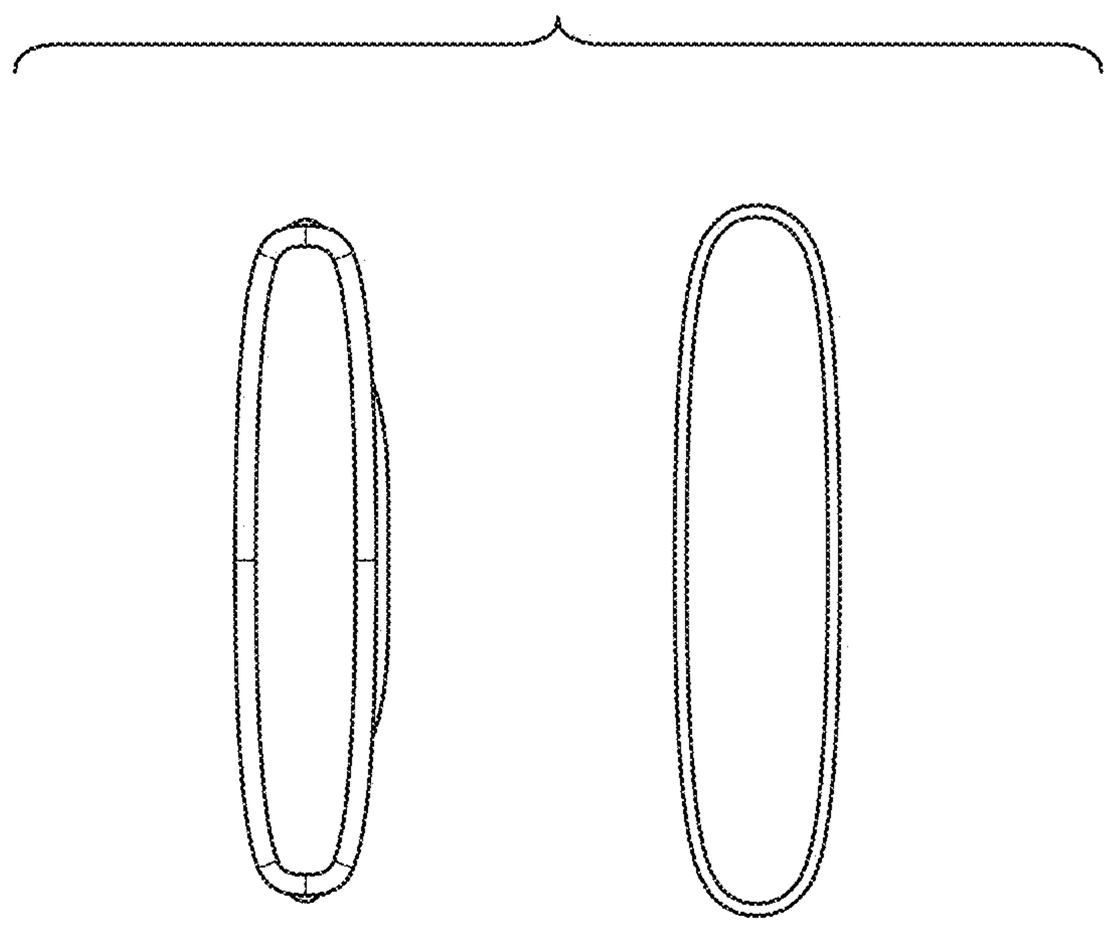

FIG. 48

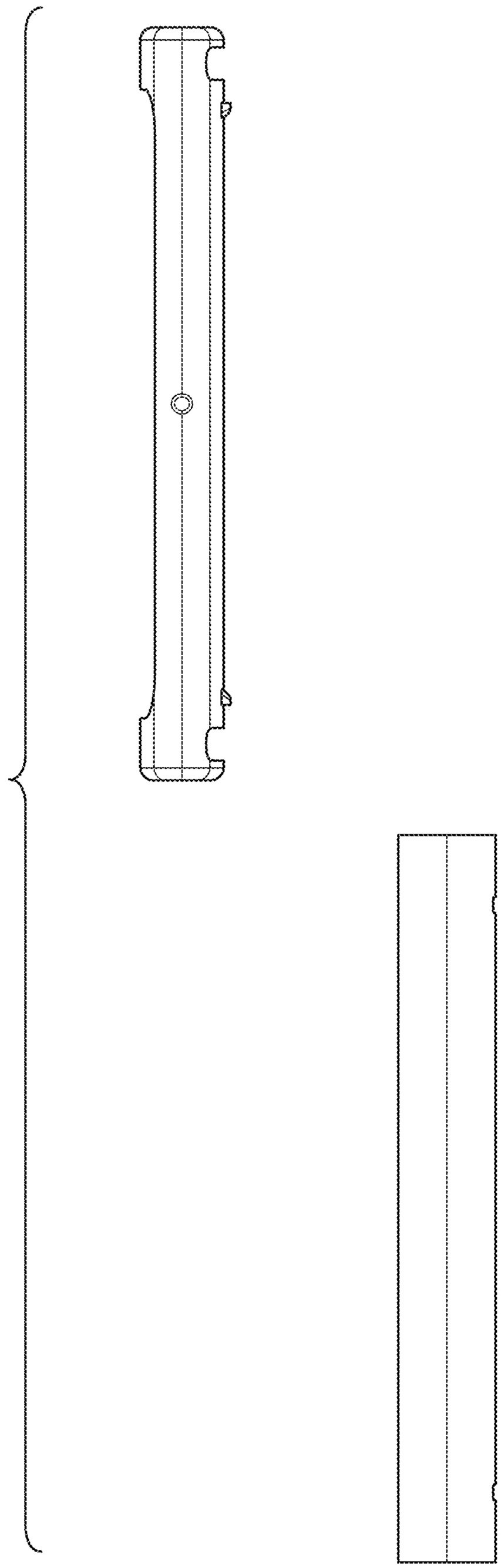

FIG. 50

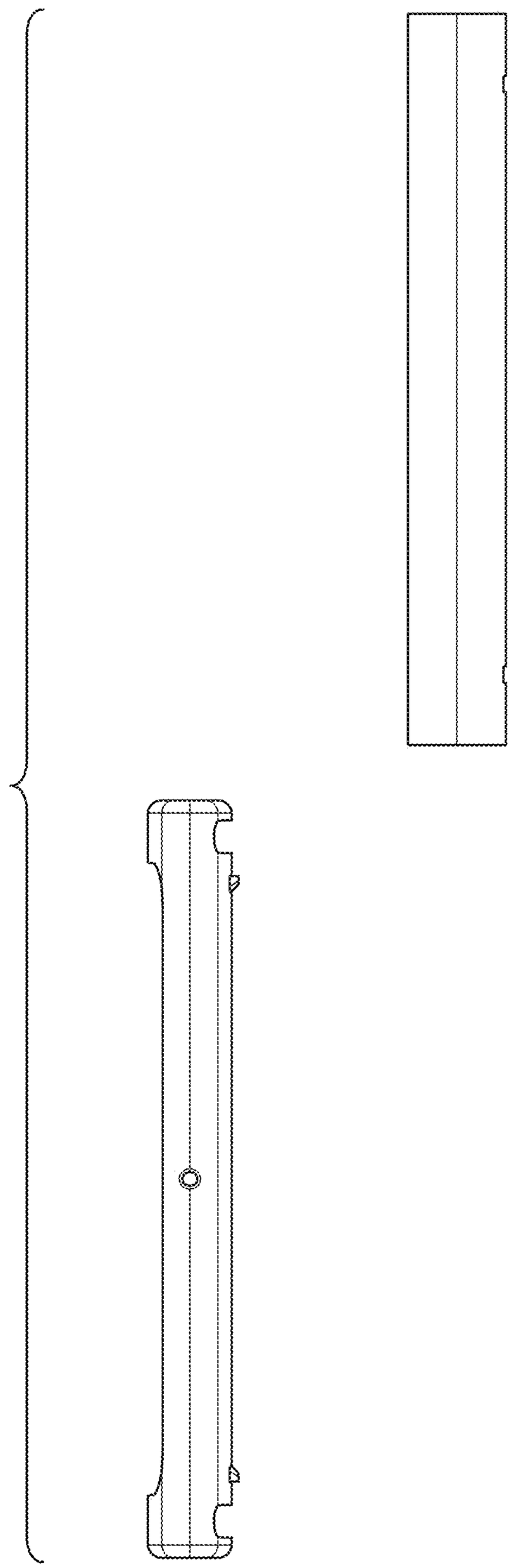

FIG. 51