US00D896942S

(12) United States Design Patent

Raether

(10) Patent No.: US D896,942 S
(45) Date of Patent: ** Sep. 22, 2020

(54) **FILTER CARTRIDGE ASSEMBLY**

(71) Applicant: **Donaldson Company, Inc.**, Bloomington, MN (US)

(72) Inventor: **Thomas D. Raether**, St. Louis Park, MN (US)

(73) Assignee: **Donaldson Company, Inc.**, Minneapolis, MN (US)

(**) Term: **15 Years**

(21) Appl. No.: **29/583,658**

(22) Filed: **Nov. 8, 2016**

Related U.S. Application Data

(62) Division of application No. 29/482,763, filed on Feb. 21, 2014, now Pat. No. Des. 773,635.

(51) **LOC (12) Cl.** **23-03**

(52) **U.S. Cl.**
USPC **D23/365**

(58) **Field of Classification Search**
USPC D23/209, 341, 354, 358, 363, 364, 365, D23/386, 387, 388; D9/549, 516
CPC B01D 46/0068; B01D 46/4227; B01D 46/527; B01D 2271/027; B01D 46/0005; B01D 46/10; B01D 46/2411; B01D 46/521
See application file for complete search history.

(56) **References Cited**

U.S. PATENT DOCUMENTS

2,072,906	A	3/1937	Rosenberger
2,952,332	A	9/1960	Metro
3,131,044	A	4/1964	Springer
3,327,458	A	6/1967	Auckland
3,421,295	A	1/1969	Swift et al.
3,475,884	A	11/1969	Kulzer
3,524,304	A	8/1970	Wittemeier et al.
3,830,042	A	8/1974	MacDonnell
3,891,418	A	6/1975	Burger et al.
4,072,484	A	2/1978	Carre
4,187,091	A	2/1980	Durre et al.
4,343,632	A	8/1982	Margraf
4,345,924	A	8/1982	Margraf
4,395,269	A	7/1983	Schuler
4,415,343	A	11/1983	Margraf
4,496,377	A	1/1985	Margraf
4,504,293	A	3/1985	Gillingham et al.
D283,621	S	4/1986	Gauer et al.
4,661,131	A	4/1987	Howeth
4,746,339	A	5/1988	Millard

(Continued)

Primary Examiner — Steven J Czyz
(74) *Attorney, Agent, or Firm* — Mueting Raasch Group

(57) **CLAIM**

The ornamental design for a filter cartridge assembly, as shown and described.

DESCRIPTION

FIG. **1** is a perspective view of a filter cartridge assembly;
FIG. **2** is a left side elevation view thereof;
FIG. **3** is a right side elevation view thereof;
FIG. **4** is a top plan view thereof;
FIG. **5** is a bottom plan view thereof;
FIG. **6** is a front end elevation view thereof; and,
FIG. **7** is a rear end elevation view thereof.

The broken lines depict portions of the article that form no part of the claimed design.

The dot dash lines are included for the purpose of illustrating a portion of the article that does not form a part of the claimed design.

The filter cartridge assembly is depicted with a symbolic break in its length. The appearance of any portion of the article between the break lines forms no part of the claimed design.

1 Claim, 4 Drawing Sheets

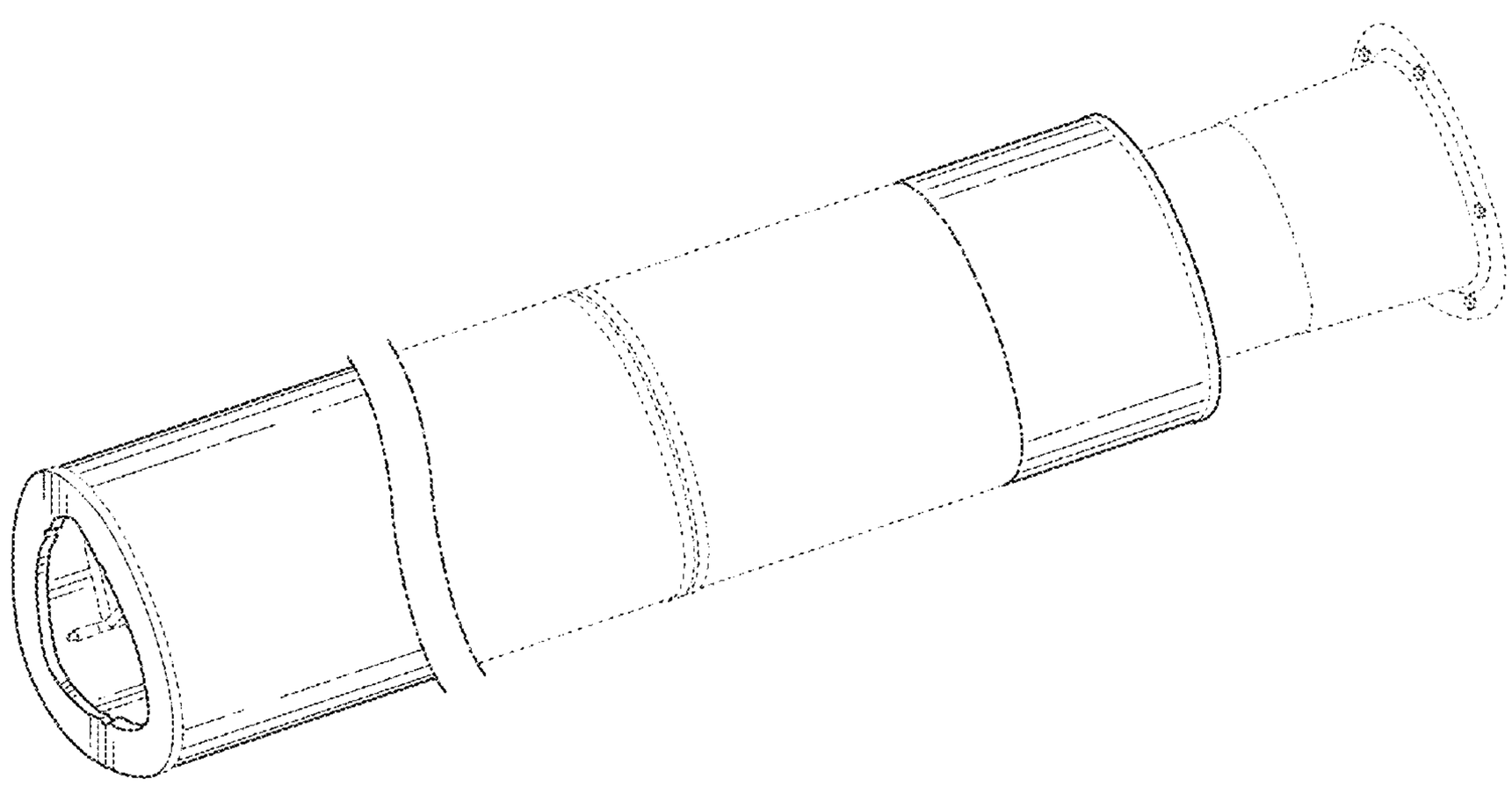

(56) **References Cited**

U.S. PATENT DOCUMENTS

4,968,424	A		11/1990	Plaisier	
5,062,867	A		11/1991	Klimczak	
5,074,896	A		12/1991	Baert et al.	
5,173,098	A		12/1992	Pipkorn	
5,238,474	A		8/1993	Kahlbaugh et al.	
D356,863	S	*	3/1995	Skaarstad	D23/365
5,562,746	A		10/1996	Raether	
5,730,766	A		3/1998	Clements	
D417,268	S	*	11/1999	Gillingham	D23/365
D421,649	S		3/2000	Cappuyns	
D424,378	S	*	5/2000	Bacon	D7/602
D436,159	S	*	1/2001	Gutmann	D23/364
D438,214	S		2/2001	Gieseke et al.	
6,233,790	B1	*	5/2001	Carothers	B01D 29/21 24/16 PB
6,364,921	B1		4/2002	Raether et al.	
6,368,388	B1	*	4/2002	Kosmider	B01D 46/0004 55/490
6,387,162	B1	*	5/2002	Kosmider	B01D 46/0013 55/484
6,485,544	B1		11/2002	Ziske	
D471,623	S	*	3/2003	Gieseke	D23/365
D499,177	S	*	11/2004	Kosmider	D23/365
D533,265	S	*	12/2006	Fiello	D23/365
7,413,588	B2	*	8/2008	Holzmann	B01D 46/0005 210/282
D586,454	S	*	2/2009	Nishio	D23/393
7,866,128	B2	*	1/2011	Buisson	B65B 5/064 53/247
D647,568	S	*	10/2011	Yuan	D19/90
D651,248	S	*	12/2011	Yuan	D19/85
8,317,890	B2	*	11/2012	Raether	B01D 46/103 55/498
D685,233	S	*	7/2013	Wong	D7/629
D685,874	S	*	7/2013	Andrews, Jr.	D22/108
D742,257	S	*	11/2015	Thompson	D10/46.2
D773,635	S	*	12/2016	Raether	D23/365
D781,409	S	*	3/2017	Raether	D23/386
D793,857	S	*	8/2017	Rice	D9/425
D800,894	S	*	10/2017	Raether	D23/386
D805,901	S	*	12/2017	Fuchs	D9/499
D812,429	S	*	3/2018	McLaughlin	D7/523
D825,029	S	*	8/2018	Goldman	D23/209
D827,770	S	*	9/2018	Brill	D23/209
2014/0260142	A1	*	9/2014	Raether	B01D 46/2414 55/498

* cited by examiner

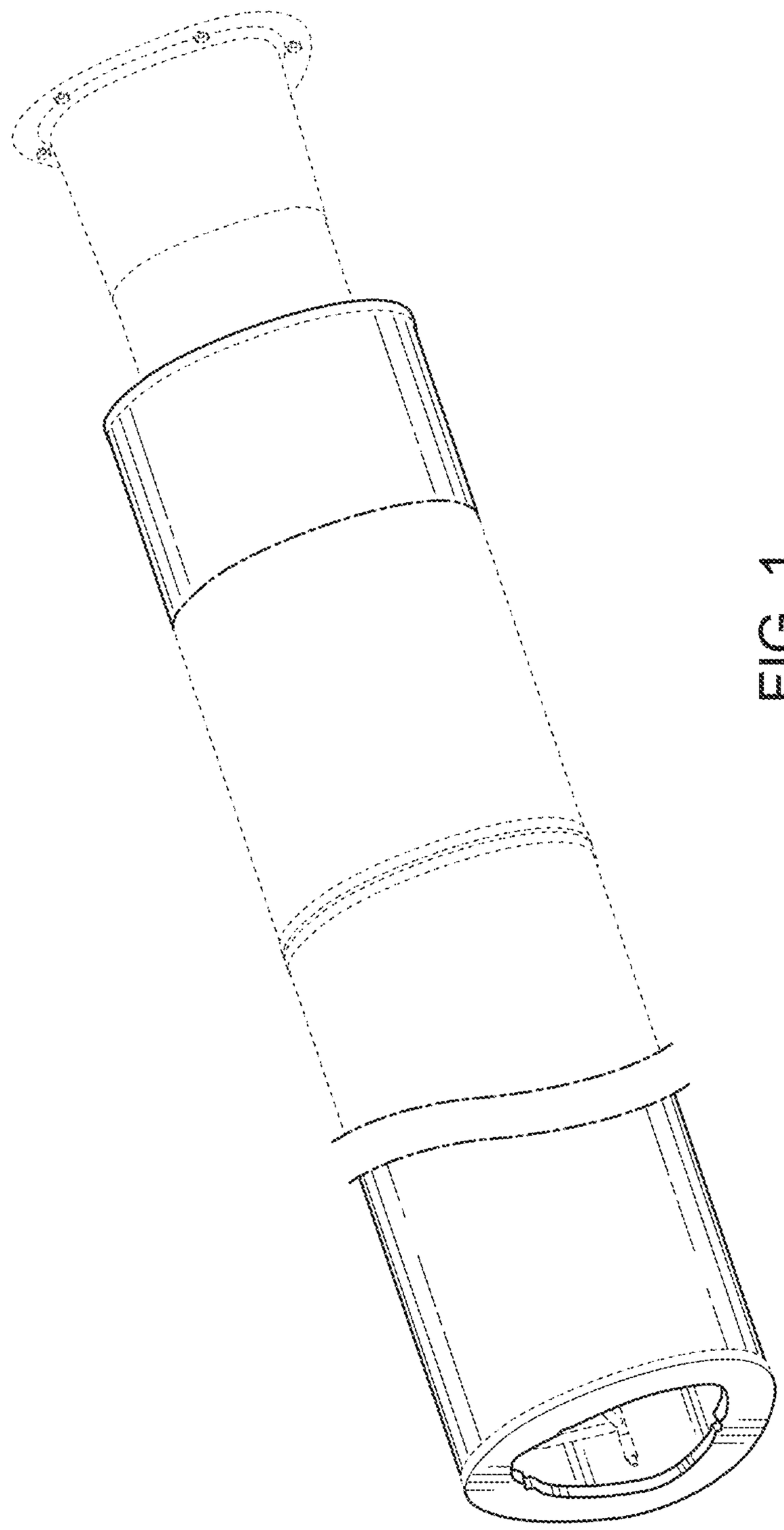

FIG. 1

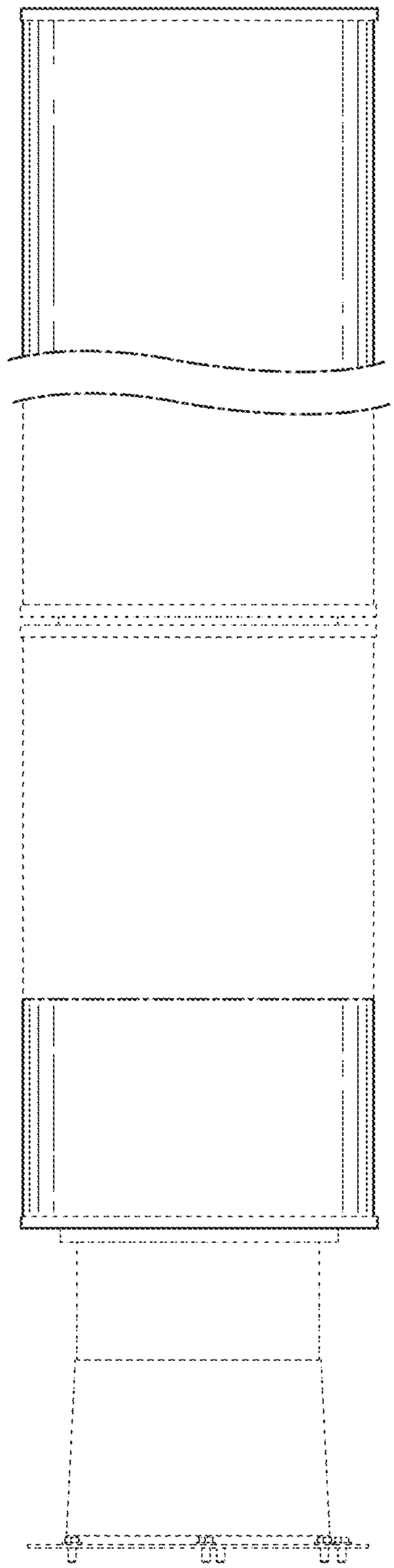

FIG. 2

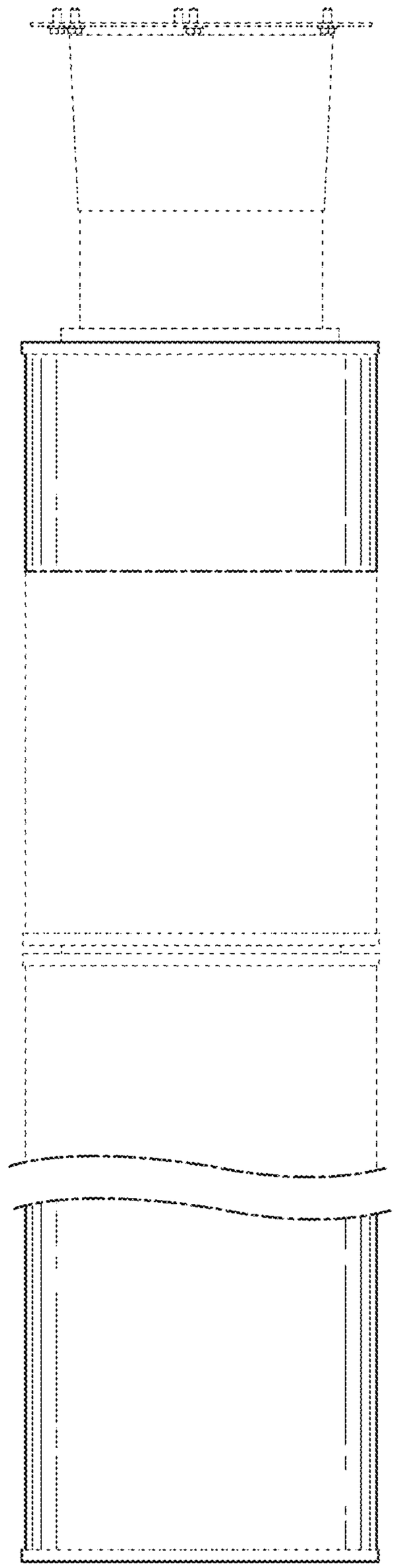

FIG. 3

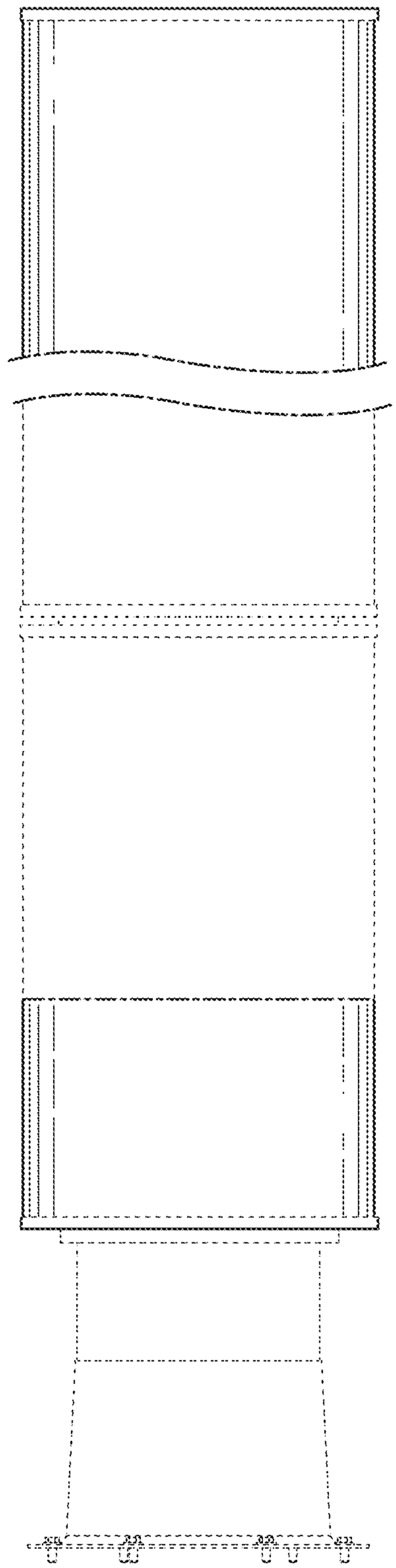

FIG. 4

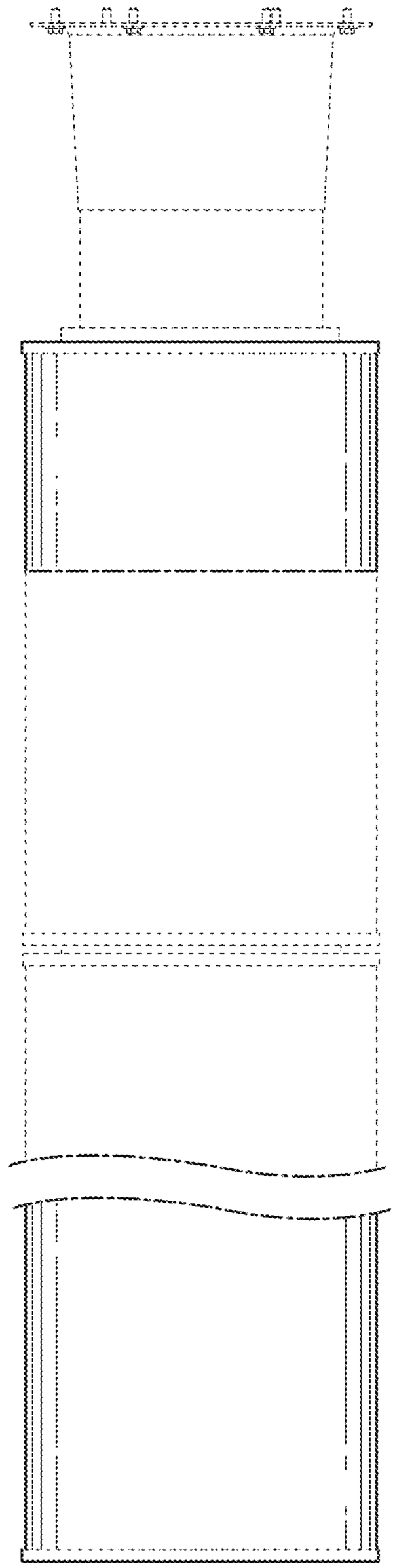

FIG. 5

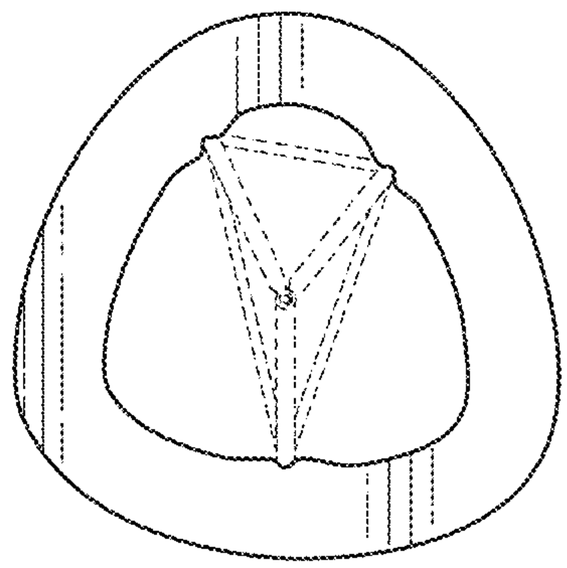

FIG. 6

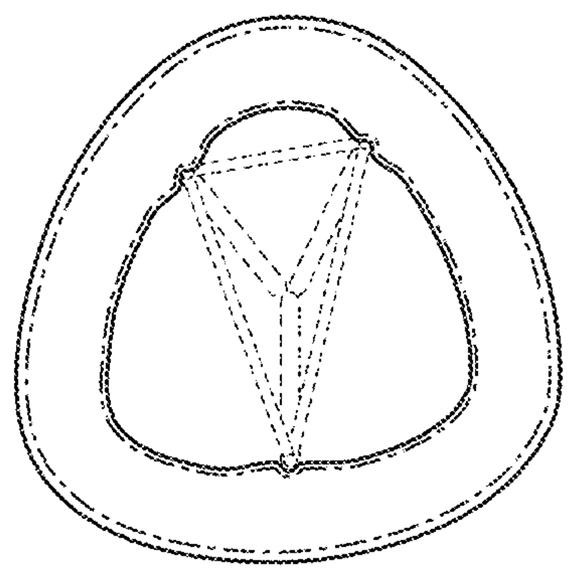

FIG. 7