US00D896874S

(12) United States Design Patent

Yamakose et al.

(10) Patent No.: US D896,874 S
(45) Date of Patent: ** Sep. 22, 2020

(54) **DOCUMENT CAMERA**

(71) Applicant: **Elmo Co., Ltd.**, Nagoya-shi, Aichi (JP)

(72) Inventors: **Hiroshi Yamakose**, Nagoya (JP); **Tetsuro Kato**, Nagoya (JP)

(73) Assignee: **Elmo Co., Ltd.**, Nagoya-chi (JP)

(**) Term: **15 Years**

(21) Appl. No.: **29/645,323**

(22) Filed: **Apr. 25, 2018**

(30) **Foreign Application Priority Data**

Nov. 13, 2017 (JP) 2017-025273

(51) **LOC (12) Cl.** **16-02**

(52) **U.S. Cl.**
USPC **D16/232**

(58) **Field of Classification Search**
USPC D16/200, 202, 203, 204, 214, 219, 220, D16/221, 225, 235, 236, 232
CPC H04N 5/2251; H04N 1/00519; H04N 1/00525; H04N 1/00535; H04N 2101/00; H04N 2201/0436; H04N 1/00251; H04N 1/10; H04N 1/1061; H04N 5/2252; H04N 5/2253; H04N 5/2254; H04N 5/33; H04N 5/332; H04N 5/23238; G03B 15/035; G03B 15/04; G03B 15/03; G03B 2215/0542; G03B 17/02; G03B 17/04; G03B 17/08; G03B 17/56; G03B 17/568; G03B 17/10; G03B 19/04; F16M 11/048; F16M 11/2021; F16M 11/28
See application file for complete search history.

(56) **References Cited**

U.S. PATENT DOCUMENTS

D327,672 S * 7/1992 Iimura D14/423
D364,852 S * 12/1995 Park D14/423
D397,709 S * 9/1998 Park D16/232
D407,517 S * 3/1999 Zeller D26/60
6,317,155 B1 * 11/2001 Ohyama G03B 27/52 348/373
D494,995 S * 8/2004 Kim D14/423
(Continued)

Primary Examiner — Sandra S Snapp
Assistant Examiner — Ieisha N Price
(74) *Attorney, Agent, or Firm* — Posz Law Group, PLC

(57) **CLAIM**

The ornamental design for a document camera, as shown and described.

DESCRIPTION

FIG. **1** is a front, top, and right side perspective view of a document camera.
FIG. **2** is a front view of the document camera.
FIG. **3** is a rear view of the document camera.
FIG. **4** is a right side view of the document camera.
FIG. **5** is a left side view of the document camera.
FIG. **6** is a top view of the document camera.
FIG. **7** is a bottom view of the document camera.
FIG. **8** is a rear, top, and left side perspective view of the document camera.
FIG. **9** is a front, top, and right side perspective view of the document camera shown in an alternate configuration, in which the camera unit is rotated in the front direction.
FIG. **10** is a front, top, and right side perspective view of the document camera shown in an alternate configuration, in which the upper arm of the arm supporting the camera unit is folded, and the camera unit is directed in the rear; and,
FIG. **11** is a front, top, and right side perspective view of the document camera shown in alternate configuration, in which the arm supporting the camera unit is folded, and the camera unit is rotated in the front direction.
The broken lines in the drawings illustrate portions of the document camera and form no part of the claimed design.

1 Claim, 11 Drawing Sheets

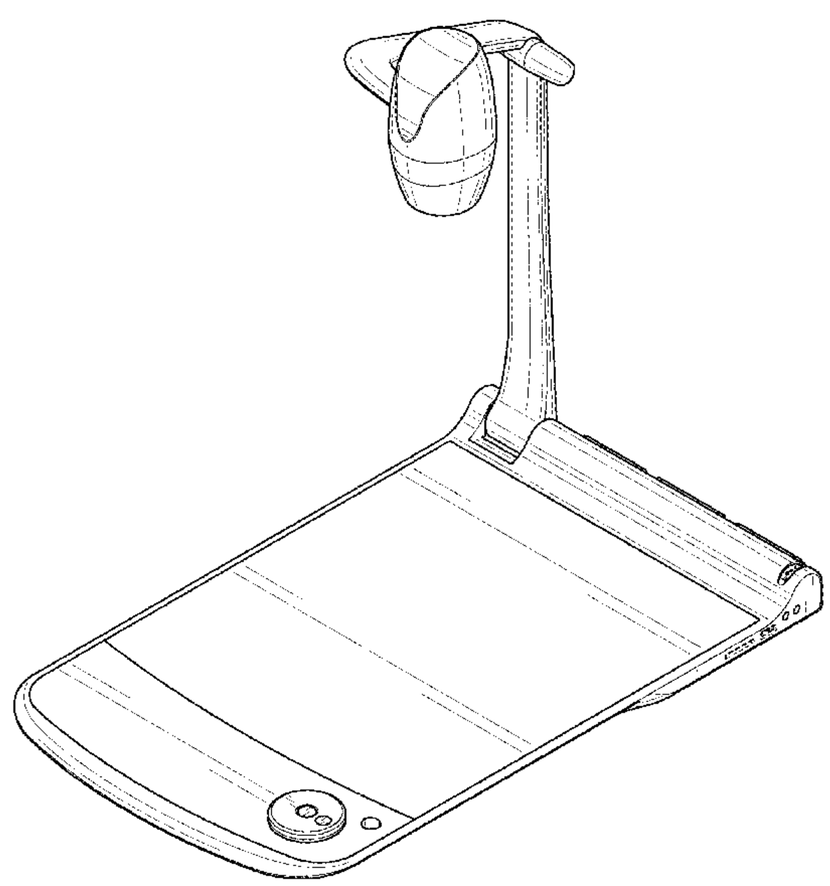

(56) **References Cited**

U.S. PATENT DOCUMENTS

D495,355	S	*	8/2004	Mudd	D14/423
D502,199	S	*	2/2005	Imai	D16/200
D542,795	S	*	5/2007	Sukenari	D14/423
D580,962	S	*	11/2008	Sukenari	D14/423
D612,851	S	*	3/2010	Maruyama	D14/423
8,054,377	B2	*	11/2011	Hsu	F16M 11/045 348/373
D651,635	S	*	1/2012	Hong	D14/423
D662,121	S	*	6/2012	Rodriguez	D14/423
D663,761	S	*	7/2012	Kato	D14/423
D678,383	S	*	3/2013	Park	D16/232
D680,148	S	*	4/2013	Unno	D14/423
D686,268	S	*	7/2013	Dunn	D14/423
D708,655	S	*	7/2014	Wong	D16/208
D746,893	S	*	1/2016	Dong	D16/135
D782,558	S	*	3/2017	Tabuchi	D16/214
2005/0105181	A1	*	5/2005	Wolf	G03B 21/10 359/558
2006/0152639	A1	*	7/2006	Yoon	G03B 15/035 349/6
2006/0159439	A1	*	7/2006	Furuya	G03B 15/03 396/86
2009/0167887	A1	*	7/2009	Ueda	H04N 1/00405 348/222.1

* cited by examiner

FIG. 1

FIG. 2

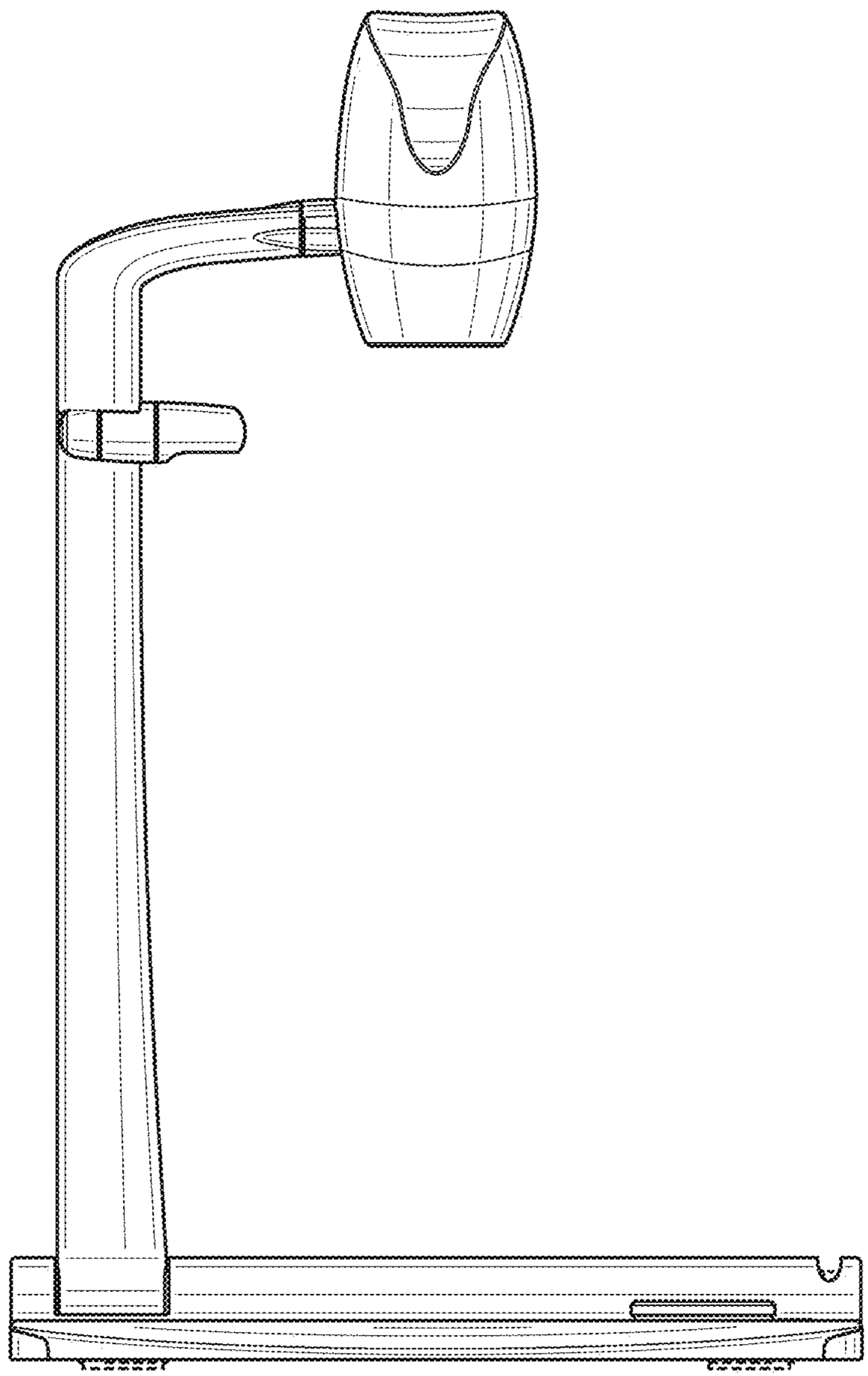

FIG. 3

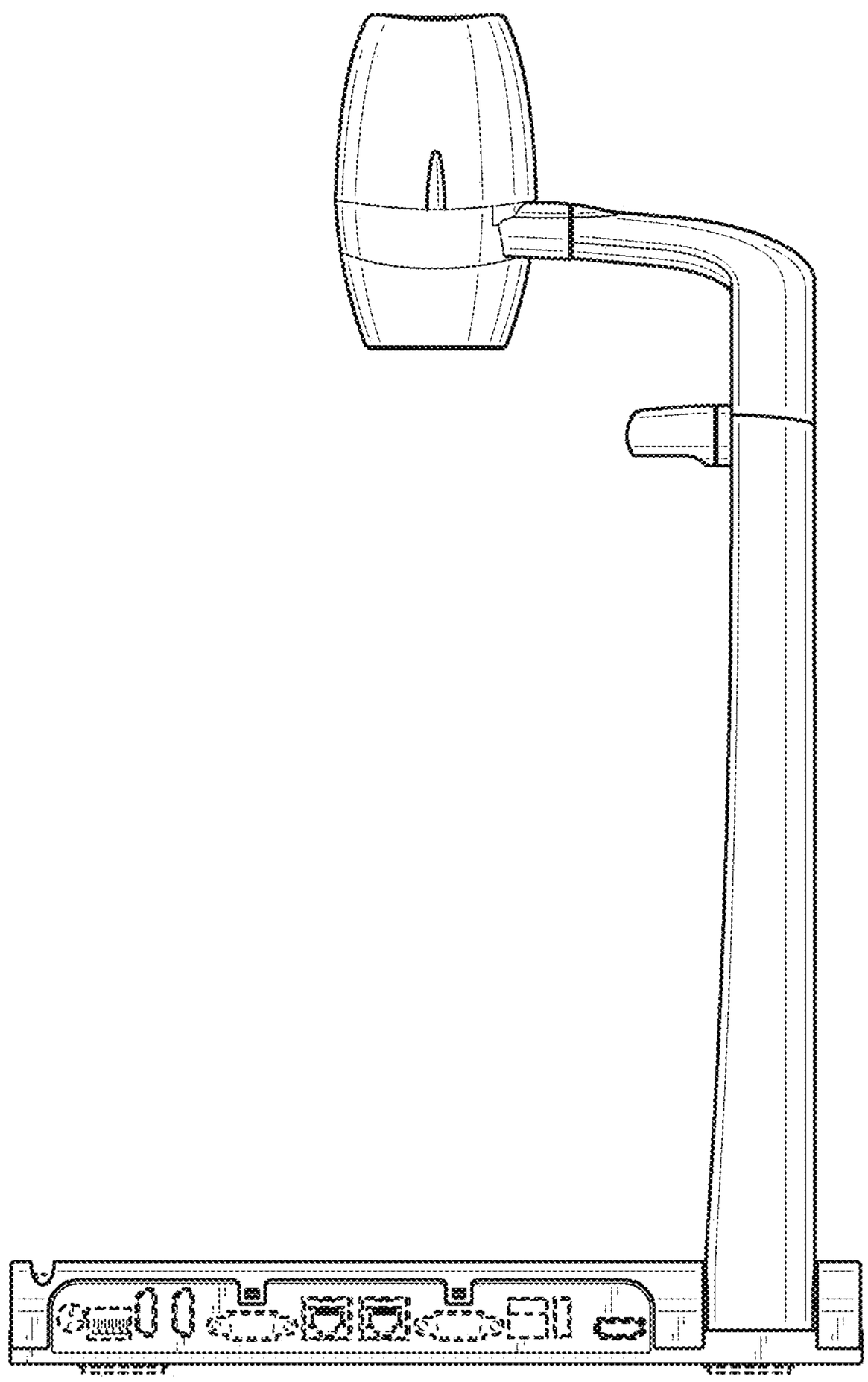

FIG. 4

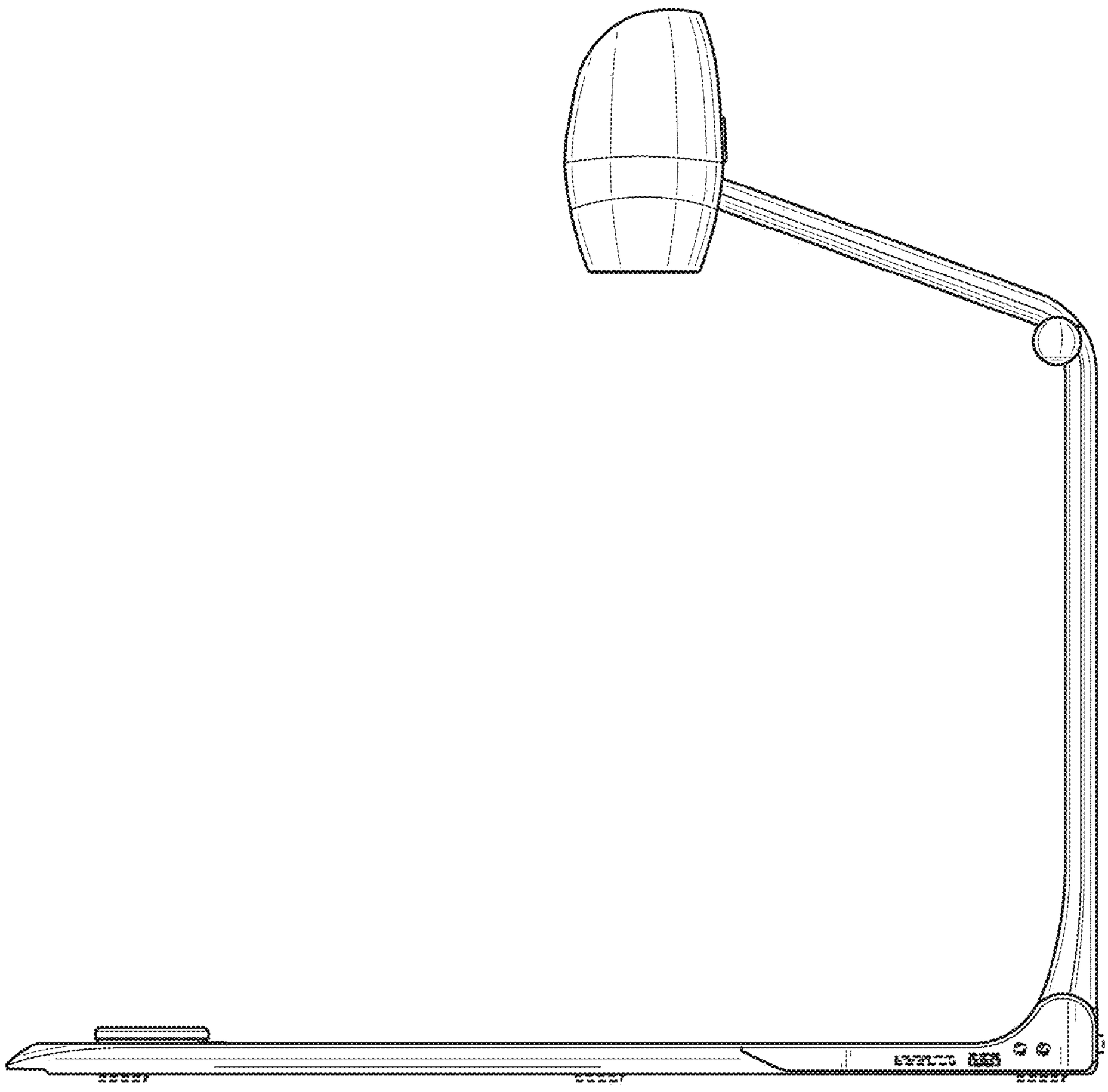

FIG. 5

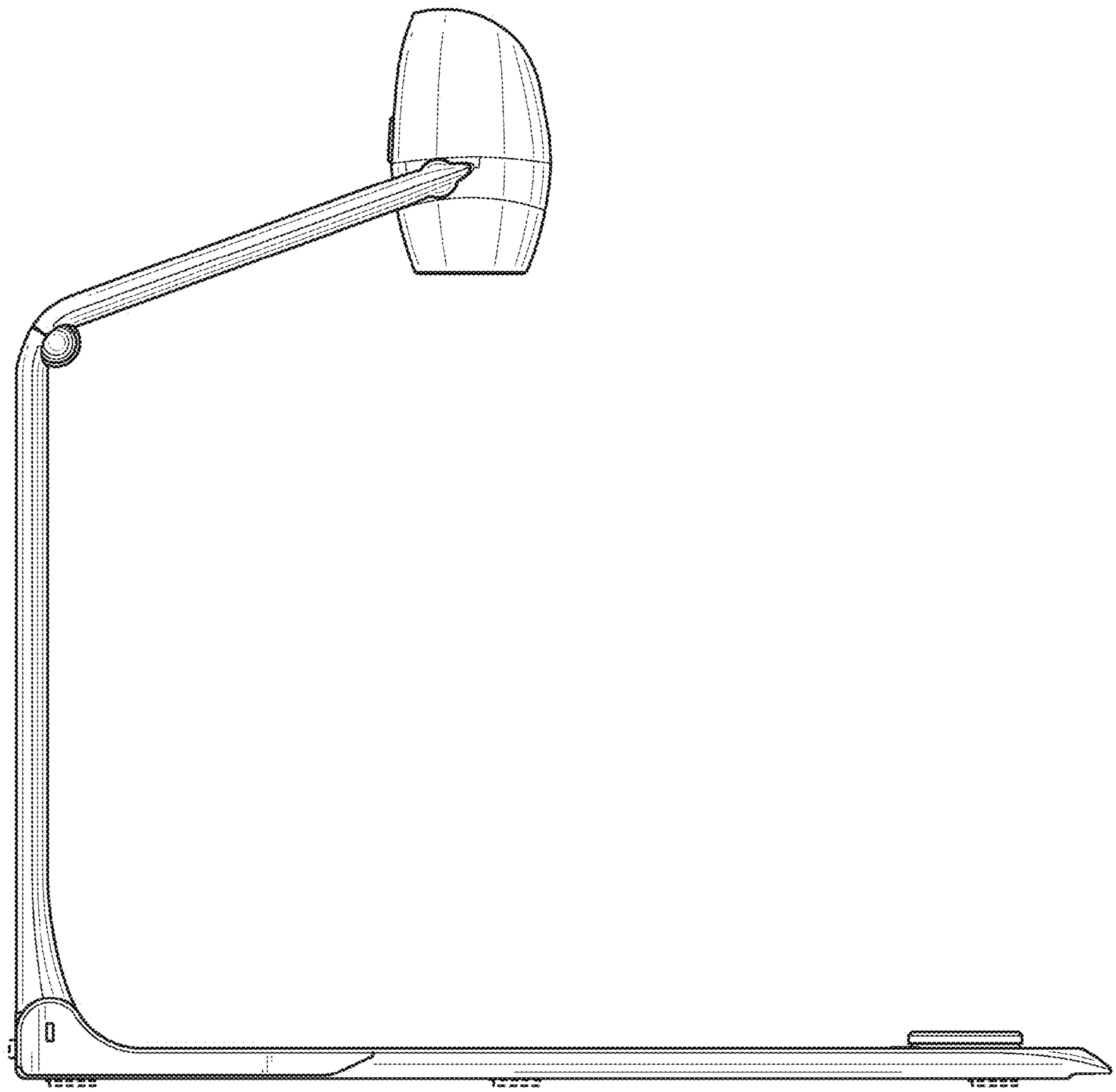

FIG. 6

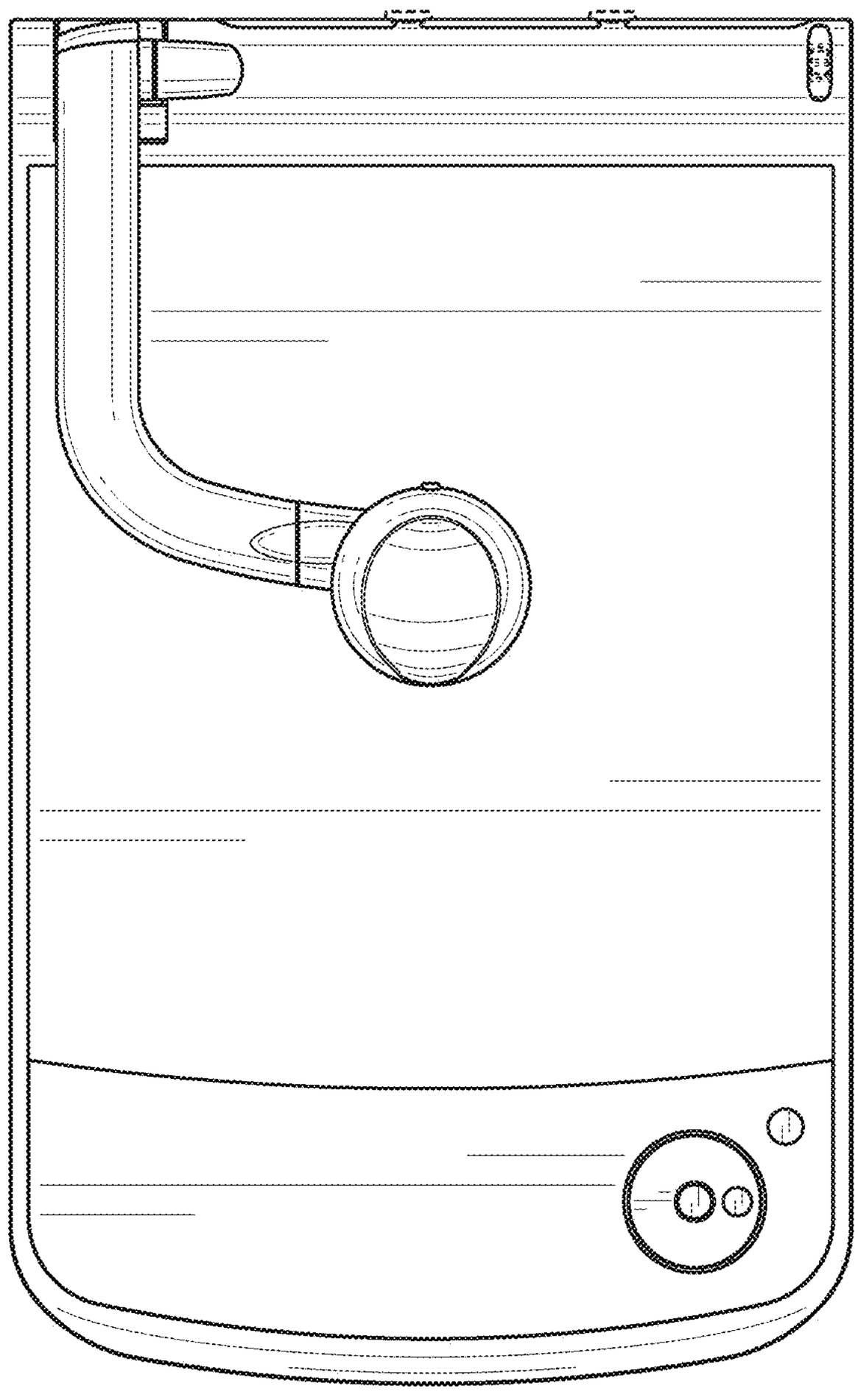

FIG. 7

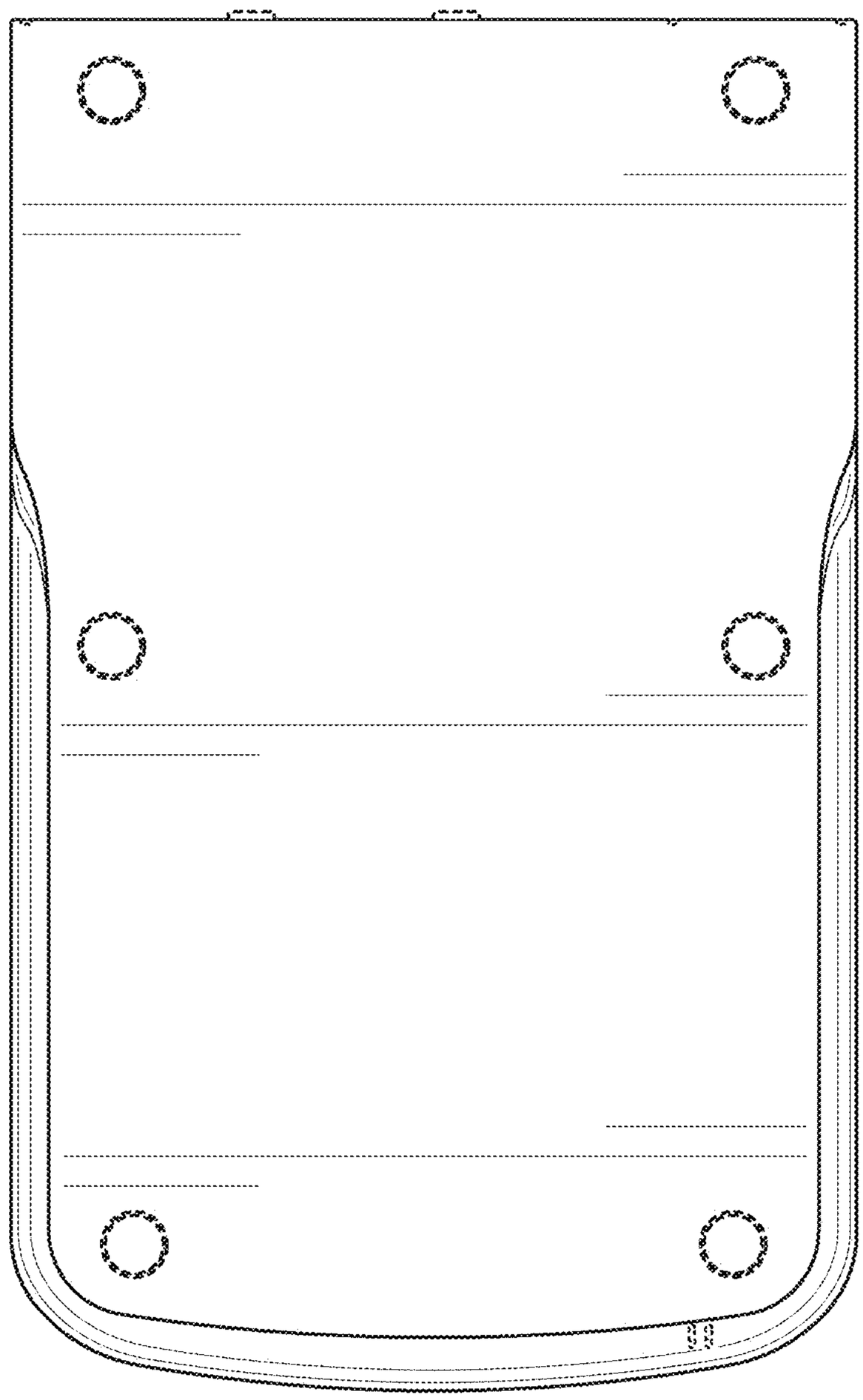

FIG. 8

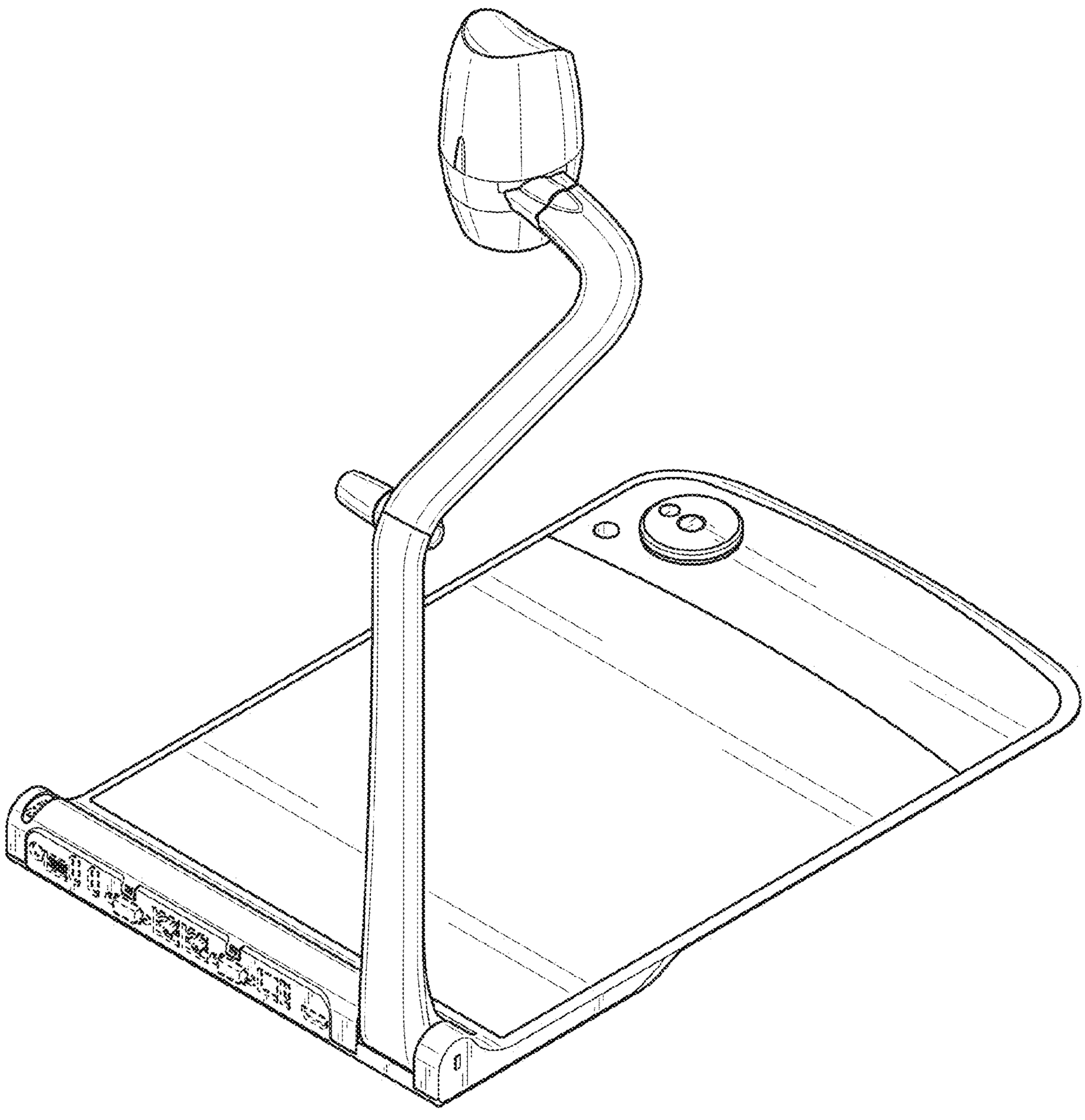

FIG. 9

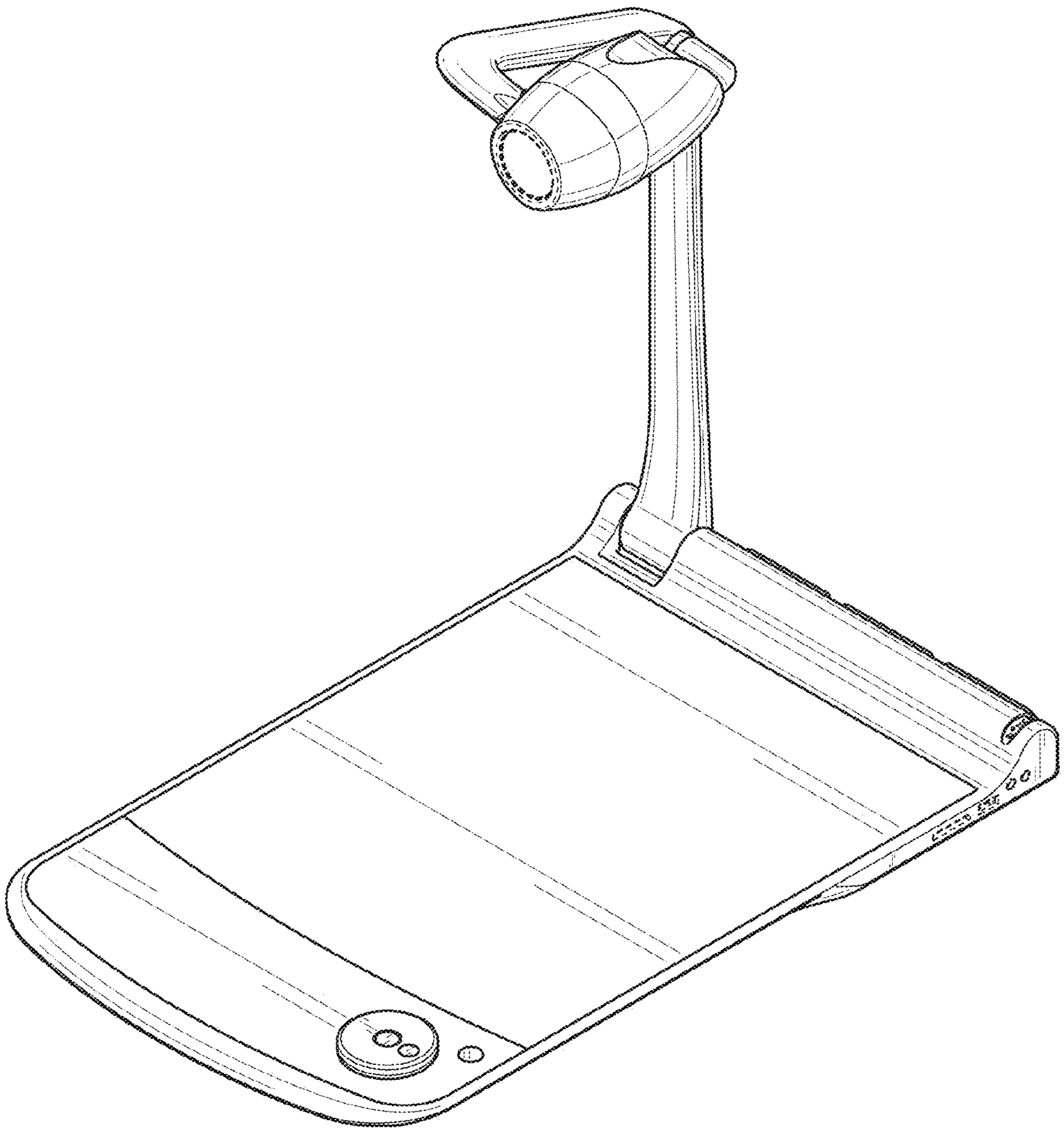

FIG.10

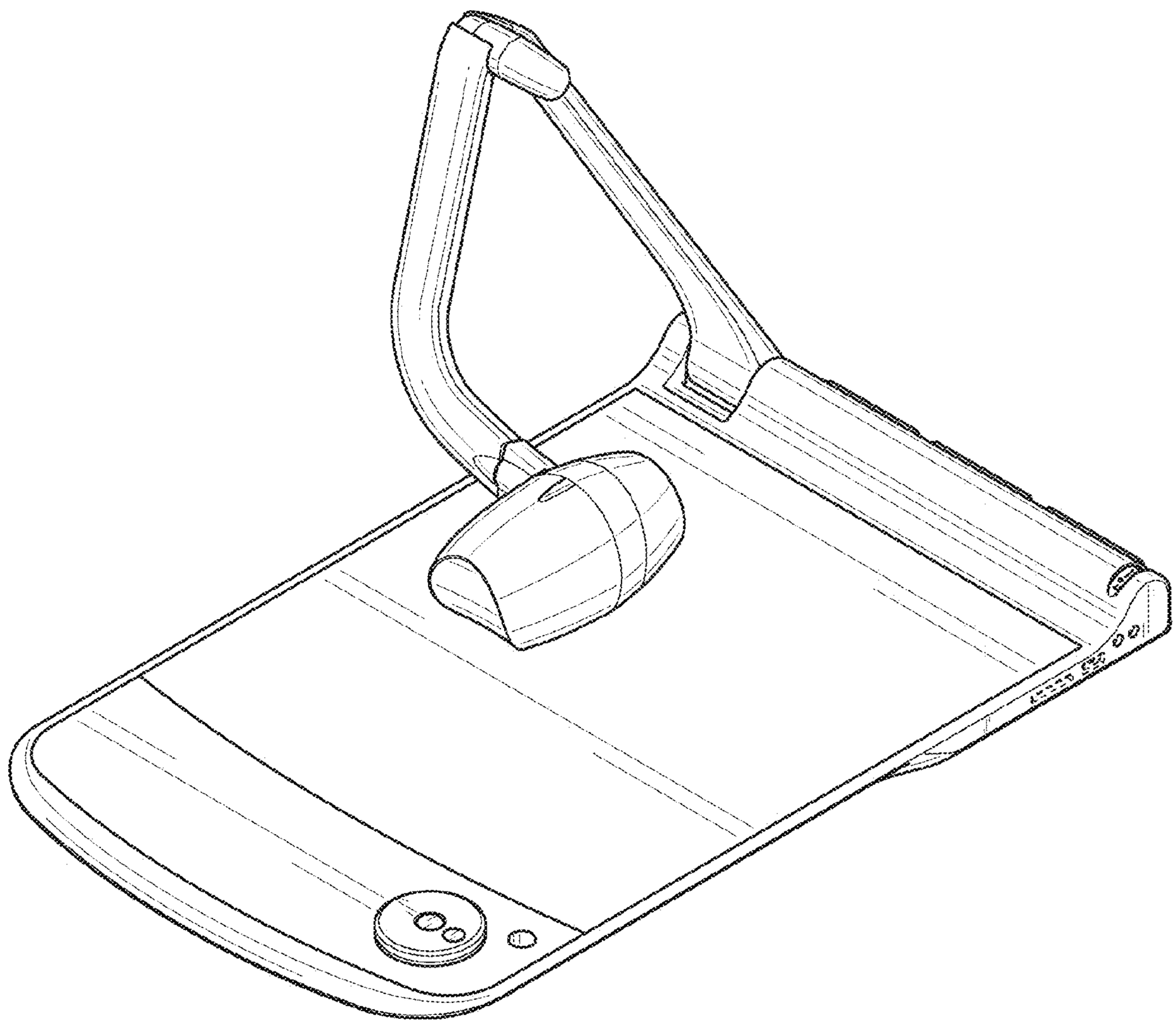
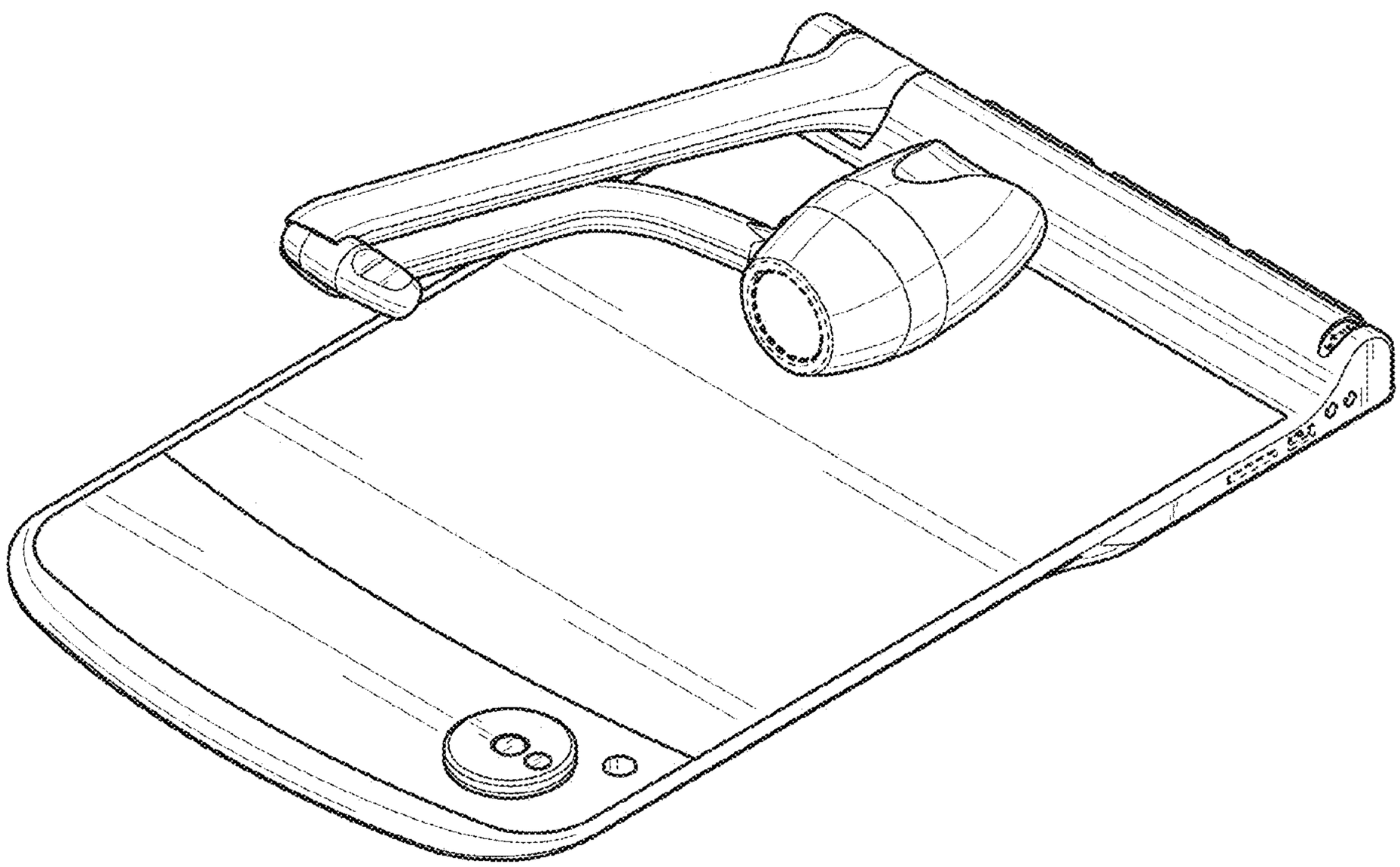
FIG. 11