US00D893758S

(12) United States Design Patent
Rosan

(10) Patent No.: US D893,758 S
(45) Date of Patent: ** Aug. 18, 2020

(54) **WALL CONNECTOR**

(71) Applicant: **EverBlock Systems, LLC**, New York, NY (US)

(72) Inventor: **Arnon Rosan**, New York, NY (US)

(73) Assignee: **EverBlock Systems, LLC**, New York, NY (US)

(**) Term: **15 Years**

(21) Appl. No.: **29/672,876**

(22) Filed: **Dec. 10, 2018**

(51) **LOC (12) Cl.** **25-01**

(52) **U.S. Cl.**
USPC **D25/61**; D25/138

(58) **Field of Classification Search**
USPC D8/349, 354, 373, 382, 384; D21/483–486, 489–491, 493, 494, 499, D21/500–502, 504, 505; D25/60, 61, D25/113, 114, 115, 118, 133, 135, 136, D25/138, 152, 153, 156, 157, 158, 164, D25/199
CPC ... E04B 2/14; E04B 1/00; E04B 1/003; E04C 2/08; E04C 2/14; E04C 2/18; E04C 2/205; E04C 2/22
See application file for complete search history.

(56) **References Cited**

U.S. PATENT DOCUMENTS

3,600,862	A *	8/1971	Eckert	E04B 1/00 52/236.9
D458,691	S *	6/2002	Burkart	D25/61
7,328,535	B1 *	2/2008	Correia	E02D 29/025 405/284
D674,916	S *	1/2013	Cetindag	D25/61
D677,800	S *	3/2013	Cetindag	D25/113
D783,731	S	4/2017	Rosan	
D786,586	S	5/2017	Rosan	
D791,885	S	7/2017	Rosan	
D800,846	S	10/2017	Rosan	
D809,162	S	1/2018	Rosan	
10,196,626	B2	2/2019	Rosan	

FOREIGN PATENT DOCUMENTS

CN	302705199	*	1/2014
CN	302705202	*	1/2014
SG	30201501903S-0001	*	3/2016

OTHER PUBLICATIONS

EverPanel Specification Sheet https://staticl.squarespace.com/static/5484733fe4b0c710260b03b2/t/5ceffcc030f0ff0001392869/1559231680575/EverPanel+-+Specification+Sheet+%282%29.pdf Retrieved Dec. 27, 2019 (Year: 2019).*

Best-Rite Fabric Standard Modular Panel, 6'×5', Gray; Staples website, Dec. 7, 2018 (7 pages); https://www.staples.com/Best-Rite-Fabric-Standard-Modular-Panel-6x5-Gary/product_302619.

* cited by examiner

Primary Examiner — Leanne Was-Englehart
(74) *Attorney, Agent, or Firm* — Metz Lewis Brodman Must O'Keefe LLC

(57) **CLAIM**

The ornamental design for a wall connector, as shown and described.

DESCRIPTION

FIG. **1** is an isometric view of a wall connector;
FIG. **2** is a top plan view of the wall connector of FIG. **1**, with the bottom plan view being the same; and,
FIG. **3** is a front elevation view of the wall connector of FIG. **1**, with the back, right and left side elevations being the same.

1 Claim, 1 Drawing Sheet

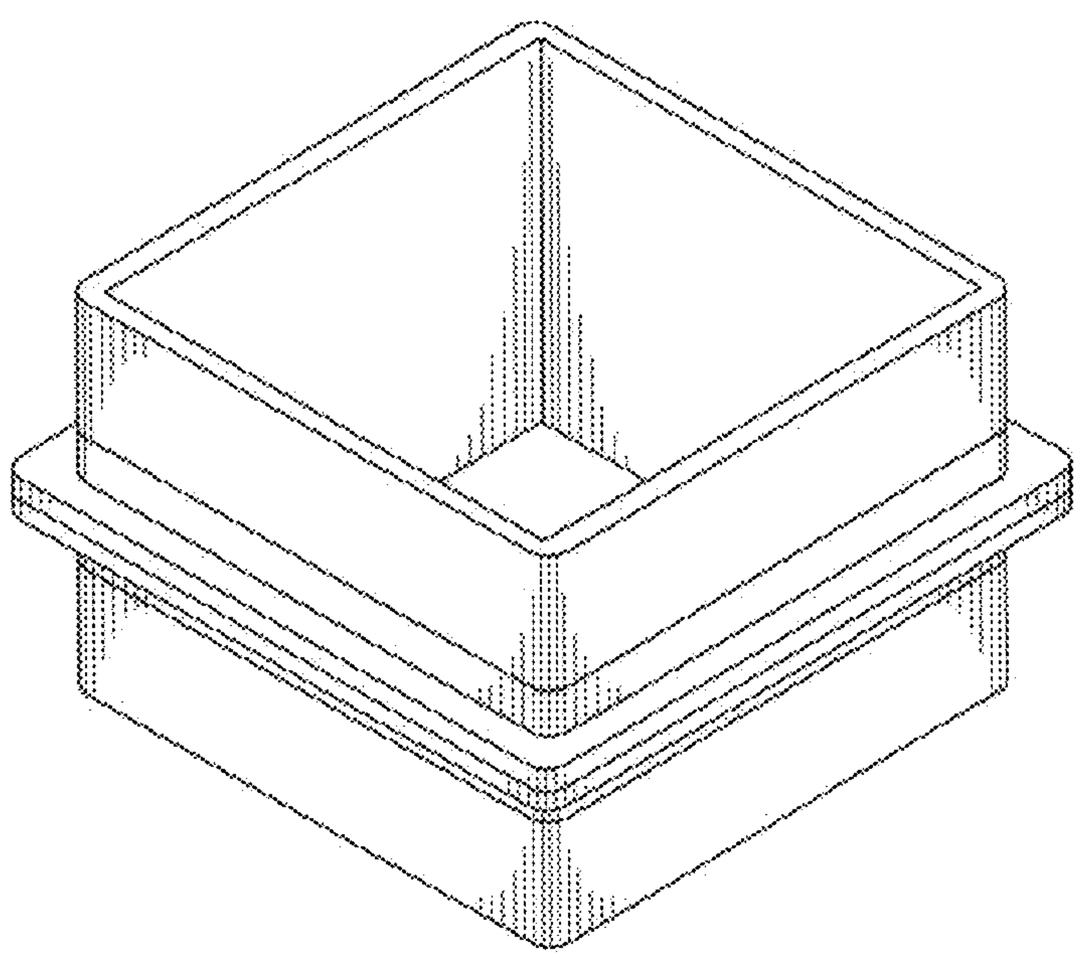

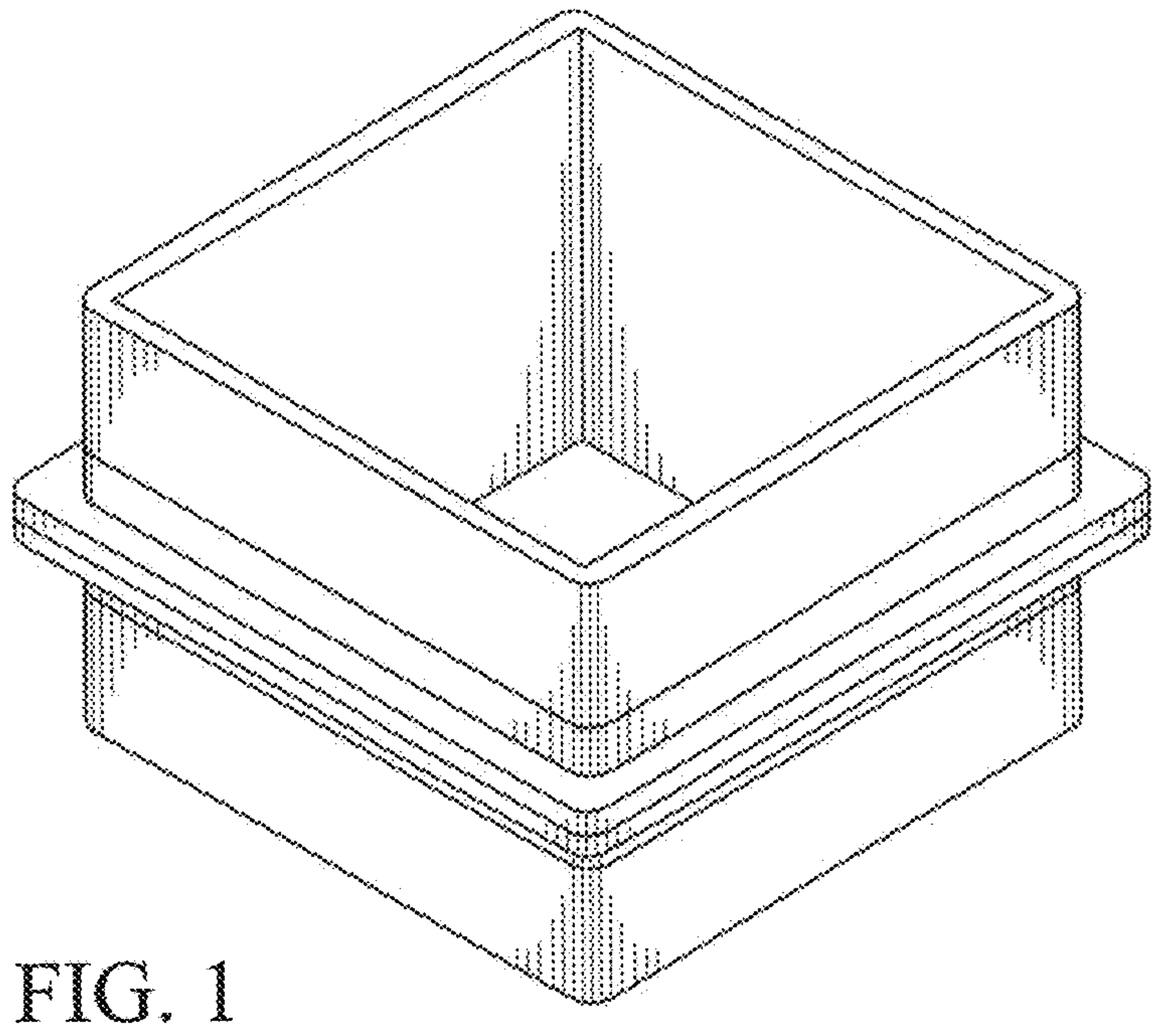

FIG. 1

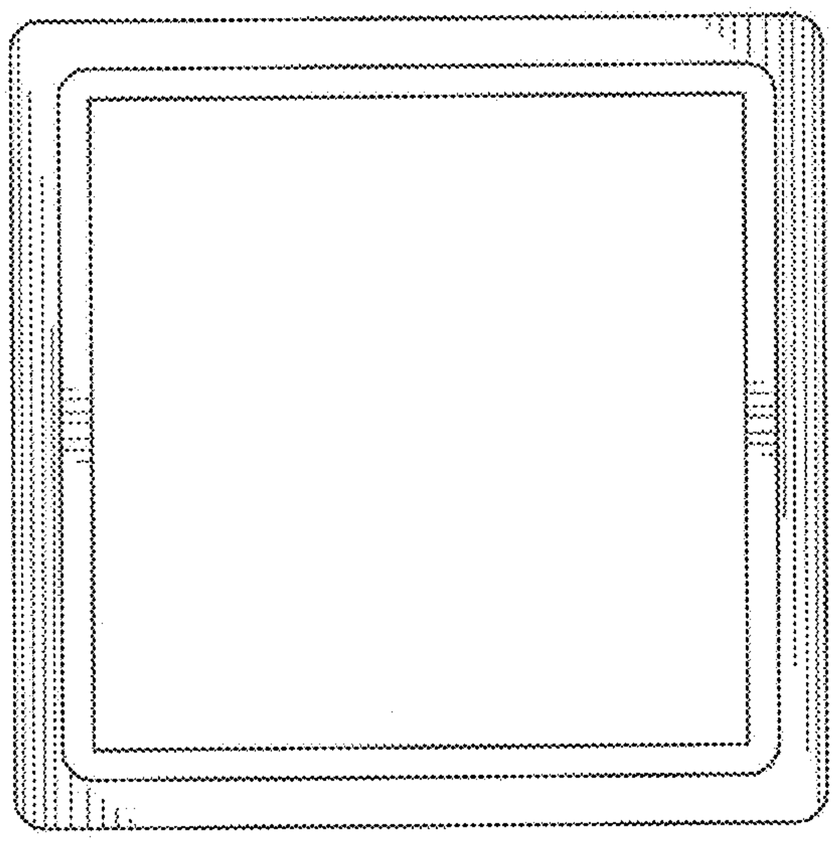

FIG. 2

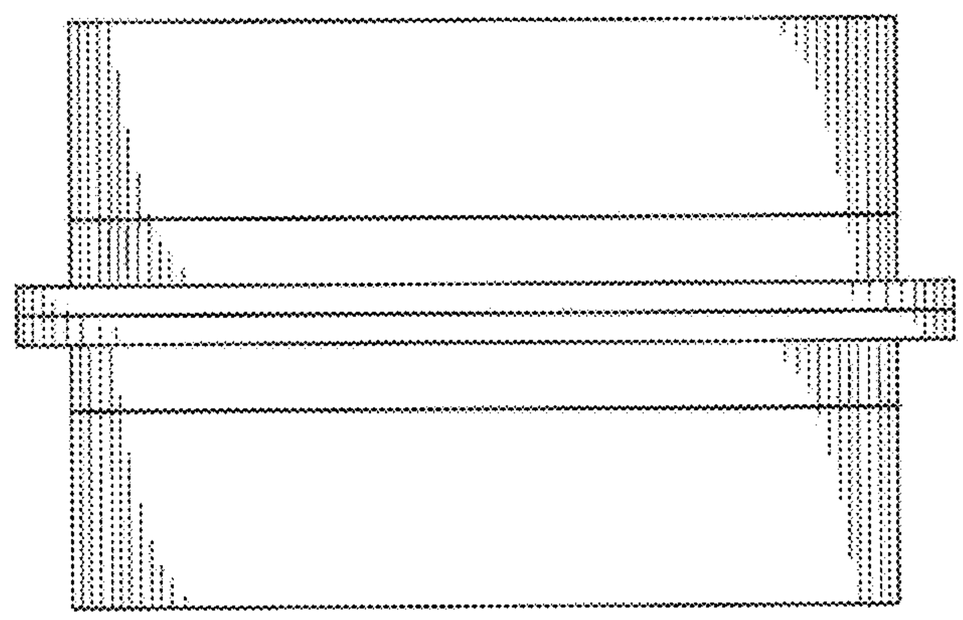

FIG. 3