US00D893684S

# (12) United States Design Patent

Matthys et al.

(10) Patent No.: US D893,684 S
(45) Date of Patent: ** Aug. 18, 2020

(54) **HEADER RING FOR A RECIPROCATING STEM OR PISTON ROD**

(71) Applicant: **Garlock Sealing Technologies, LLC**, Palmyra, NY (US)

(72) Inventors: **Randy Matthys**, Palmyra, NY (US); **Chad Yoder**, Palmyra, NY (US); **Michael McNally**, Palmyra, NY (US); **Louis Mattina**, Palmyra, NY (US)

(73) Assignee: **Garlock Sealing Technologies, LLC**, Palmyra, NY (US)

(**) Term: **15 Years**

(21) Appl. No.: **29/676,727**

(22) Filed: **Jan. 14, 2019**

**Related U.S. Application Data**

(63) Continuation-in-part of application No. 16/105,590, filed on Aug. 20, 2018.

(60) Provisional application No. 62/548,725, filed on Aug. 22, 2017.

(51) **LOC (12) Cl.** ..... **23-01**

(52) **U.S. Cl.**
USPC ..... **D23/269**

(58) **Field of Classification Search**
USPC ..... D23/269, 262, 249, 259; D15/138–139, D15/143; 277/351–360, 504, 563, 572, 277/316, 364–365, 394, 397, 406–407, 277/418, 449, 451–454, 458–460, 491, 277/517, 529, 602, 610, 612, 641–642, 277/644, 648; 285/339, 343
CPC ..... E04D 13/14; F16J 7/00
See application file for complete search history.

(56) **References Cited**

U.S. PATENT DOCUMENTS

| | | | | | |
|---|---|---|---|---|---|
| 2,859,061 | A | * | 11/1958 | Reid | F16J 15/328 277/434 |
| 2,953,398 | A | | 9/1960 | Haugen et al. | |
| 3,013,830 | A | | 12/1961 | Milligan | |
| 3,419,280 | A | | 12/1968 | Wheeler | |
| 3,469,854 | A | * | 9/1969 | Linwood | F16J 15/20 277/530 |
| 3,554,563 | A | * | 1/1971 | Schumacher | F16J 15/20 277/530 |
| 4,138,144 | A | | 2/1979 | Pierce, Jr. | |
| 4,310,163 | A | | 1/1982 | Pippert | |
| 4,421,330 | A | * | 12/1983 | Burke | F16J 15/166 277/572 |
| 4,440,404 | A | | 4/1984 | Roach et al. | |

(Continued)

FOREIGN PATENT DOCUMENTS

| | | | |
|---|---|---|---|
| WO | WO2001006086 | A1 | 1/2001 |
| WO | WO2011117602 | A2 | 9/2011 |

OTHER PUBLICATIONS

Office Action dated Sep. 20, 2011, by the USPTO, regarding U.S. Appl. No. 12/347,207, 10 pages.

(Continued)

*Primary Examiner* — Amy C Wierenga
(74) *Attorney, Agent, or Firm* — Perkins Coie LLP

(57) **CLAIM**

The ornamental design for a header ring for a reciprocating stem or piston rod, as shown and described.

**DESCRIPTION**

FIG. **1** is a perspective view of the header ring for a reciprocating stem or piston rod of the present application;
FIG. **2** is a top elevation view thereof;
FIG. **3** is a front elevation view thereof;
FIG. **4** is a bottom elevation view thereof; and,
FIG. **5** is a cross sectional view taken from line **5-5** of FIG. **2** thereof.

**1 Claim, 4 Drawing Sheets**

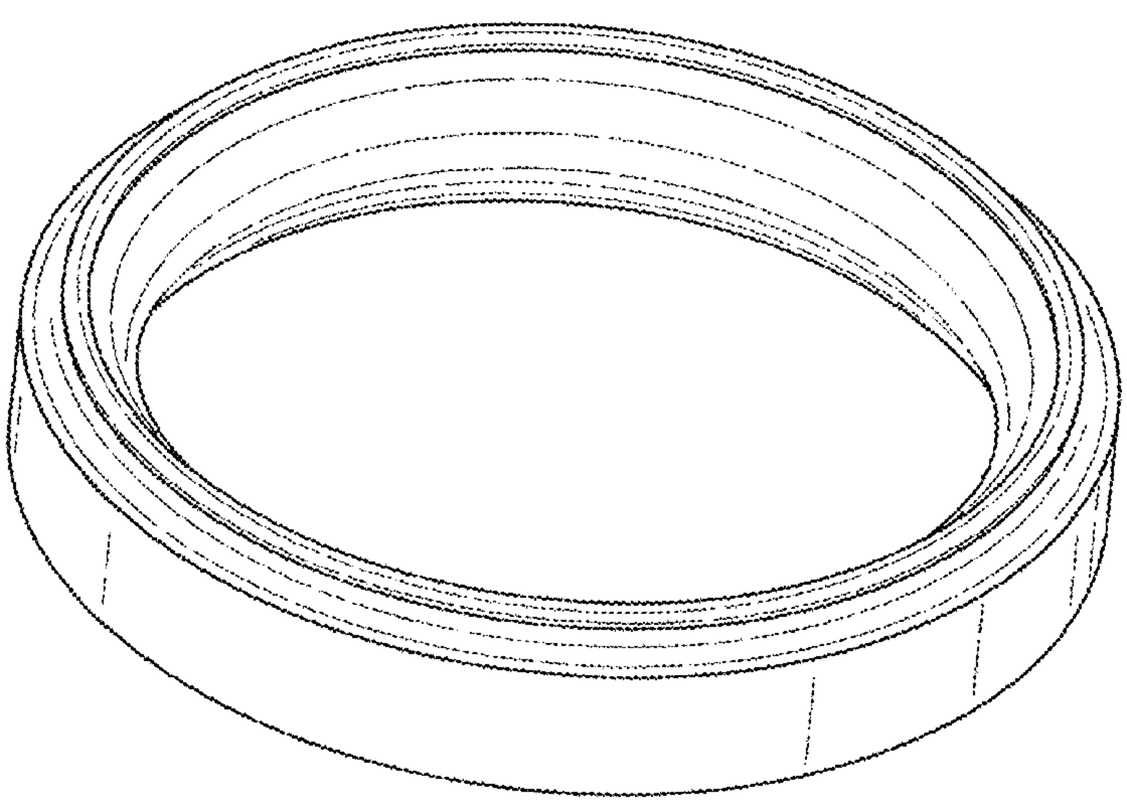

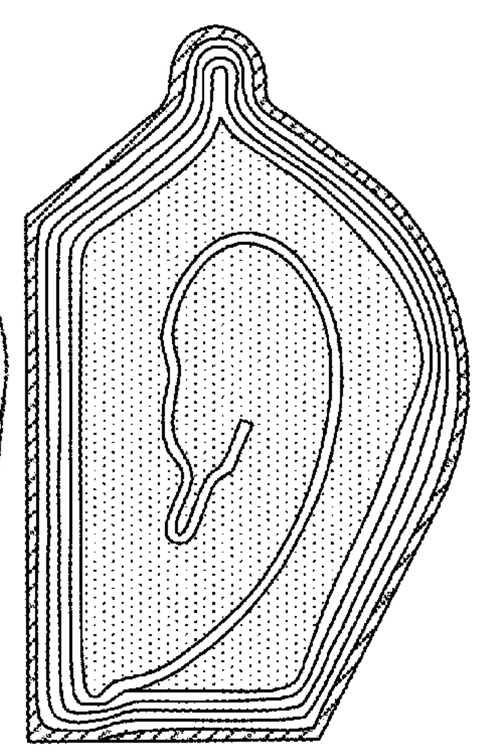

(56) **References Cited**

U.S. PATENT DOCUMENTS

| | | | | |
|---|---|---|---|---|
| 4,510,994 | A | 4/1985 | Pringle | |
| 4,526,385 | A * | 7/1985 | Wheeler | F16J 15/3208 277/556 |
| 4,729,432 | A | 3/1988 | Helms | |
| 4,823,882 | A | 4/1989 | Stokley et al. | |
| 4,848,463 | A | 7/1989 | Ringgenberg et al. | |
| 4,893,678 | A | 1/1990 | Stokley et al. | |
| 5,462,121 | A | 10/1995 | Schmuck et al. | |
| 5,951,022 | A * | 9/1999 | Gorman | F16J 15/3236 277/349 |
| 5,960,700 | A | 10/1999 | Staggs et al. | |
| 6,817,228 | B2 | 11/2004 | Upton et al. | |
| 6,907,936 | B2 | 6/2005 | Fehr et al. | |
| 7,108,067 | B2 | 9/2006 | Themig et al. | |
| 7,124,824 | B2 | 10/2006 | Turner et al. | |
| 7,134,505 | B2 | 11/2006 | Fehr et al. | |
| 7,322,417 | B2 | 1/2008 | Rytlewski et al. | |
| 7,377,321 | B2 | 5/2008 | Rytlewski | |
| 7,503,392 | B2 | 3/2009 | King et al. | |
| 7,543,634 | B2 | 6/2009 | Fehr et al. | |
| 7,628,210 | B2 | 12/2009 | Avant et al. | |
| 7,644,772 | B2 | 1/2010 | Avant et al. | |
| 7,681,650 | B2 | 3/2010 | Telfer et al. | |
| D631,142 | S * | 1/2011 | Angell | D23/262 |
| 7,861,774 | B2 | 1/2011 | Fehr et al. | |
| 8,181,972 | B2 * | 5/2012 | Tsuji | F16K 51/02 277/641 |
| 8,215,401 | B2 | 7/2012 | Braekke et al. | |
| 8,261,761 | B2 | 9/2012 | Gerrard et al. | |
| 8,356,670 | B2 | 1/2013 | Telfer | |
| 8,397,820 | B2 | 3/2013 | Fehr et al. | |
| 8,479,822 | B2 | 7/2013 | Hofman et al. | |
| 8,479,823 | B2 | 7/2013 | Mireles | |
| 8,540,019 | B2 | 9/2013 | Hofman et al. | |
| 8,668,013 | B2 | 3/2014 | O'Connell et al. | |
| 8,783,365 | B2 | 7/2014 | McCoy et al. | |
| 8,789,600 | B2 | 7/2014 | O'Connell et al. | |
| 9,534,691 | B2 * | 1/2017 | Miller | F16J 15/166 |
| 9,845,801 | B1 * | 12/2017 | Shek | F04B 53/02 |
| 2006/0213670 | A1 | 9/2006 | Bishop et al. | |
| 2007/0017679 | A1 | 1/2007 | Wolf et al. | |
| 2007/0278017 | A1 | 12/2007 | Shen et al. | |
| 2008/0066924 | A1 | 3/2008 | Xu | |
| 2009/0166980 | A1 * | 7/2009 | Miller | F16J 15/181 277/529 |
| 2009/0308588 | A1 | 12/2009 | Howell et al. | |
| 2011/0278017 | A1 | 11/2011 | Themig et al. | |
| 2012/0048556 | A1 | 3/2012 | O'Connell et al. | |
| 2013/0068475 | A1 | 3/2013 | Hofman et al. | |
| 2013/0118732 | A1 | 5/2013 | Chauffe | |
| 2013/0133876 | A1 | 5/2013 | Naedler et al. | |
| 2013/0248201 | A1 | 9/2013 | Jackson | |
| 2013/0333891 | A1 | 12/2013 | Fripp et al. | |
| 2016/0129448 | A1 * | 5/2016 | Andersson | B02C 2/04 241/299 |

OTHER PUBLICATIONS

Office Action dated Dec. 12, 2011, by the USPTO, regarding U.S. Appl. No. 12/347,207, 8 pages.

* cited by examiner

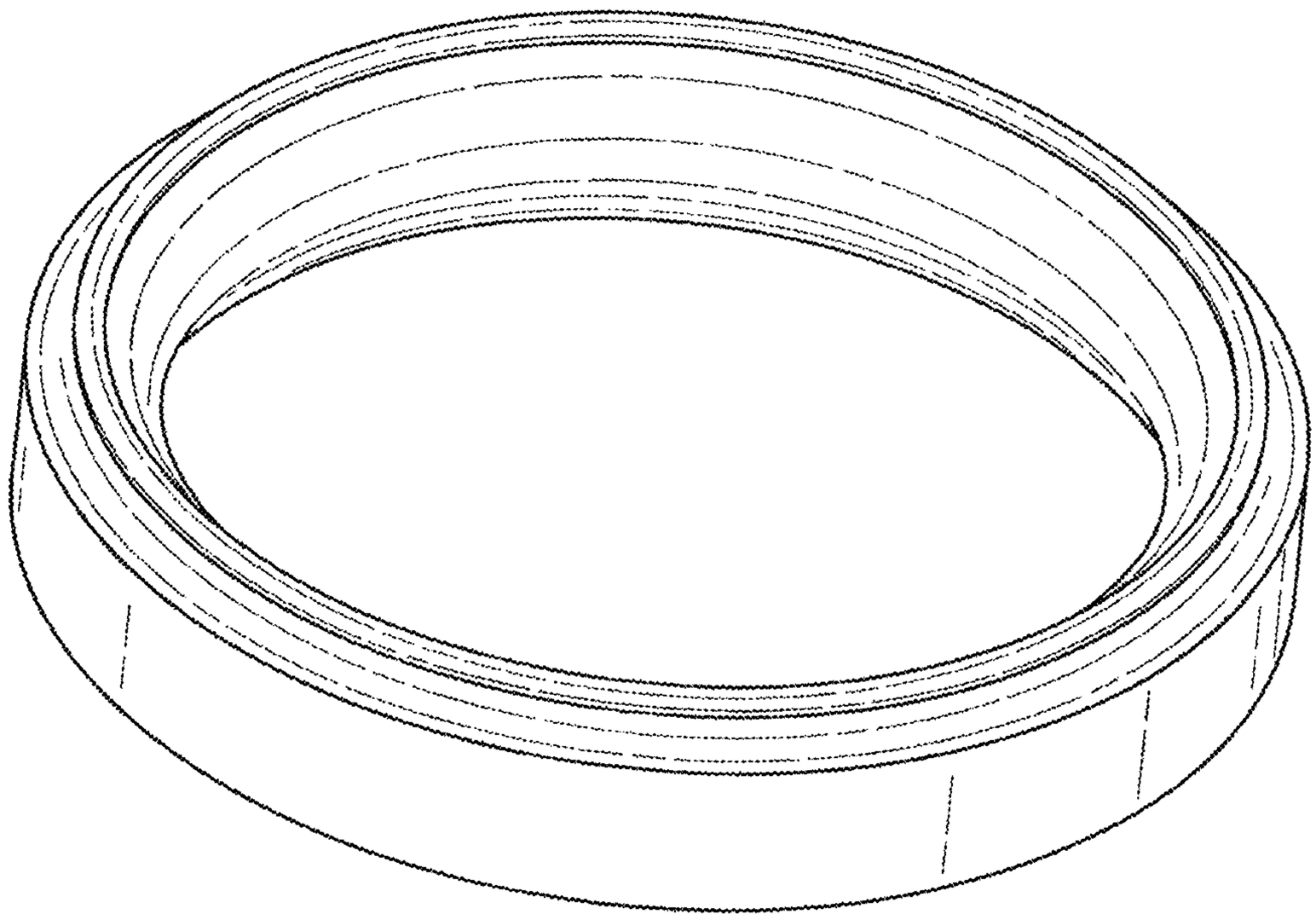

FIG.1

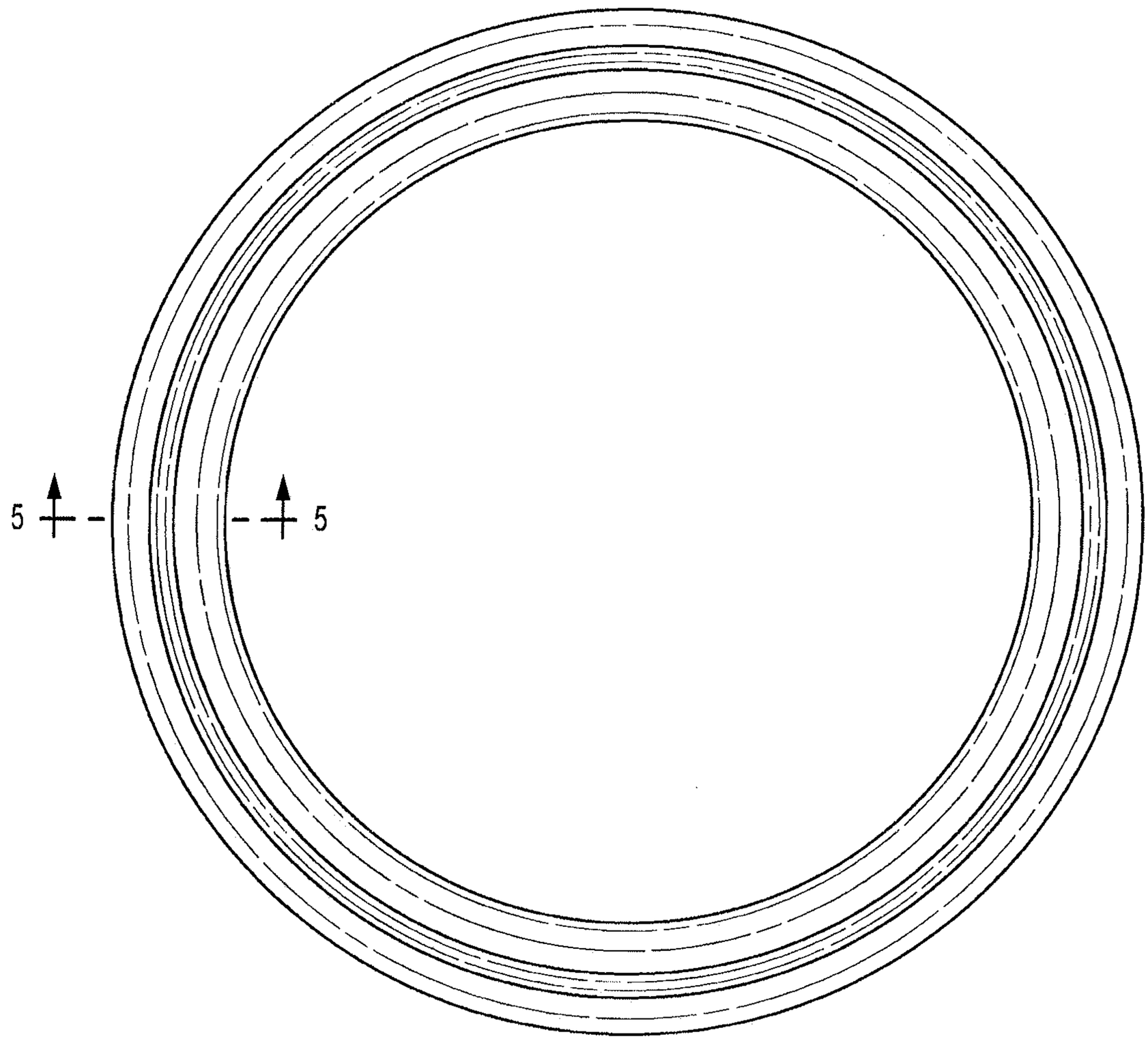


FIG.2

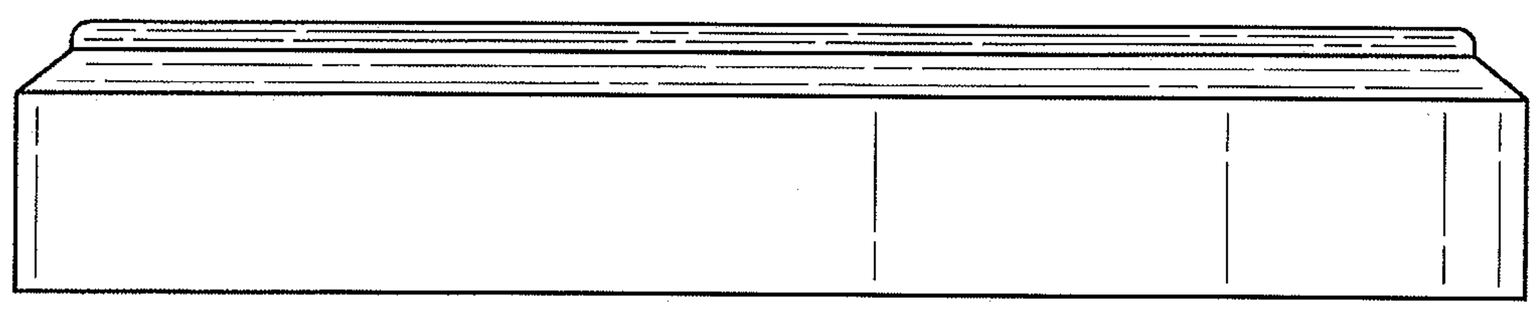

FIG.3

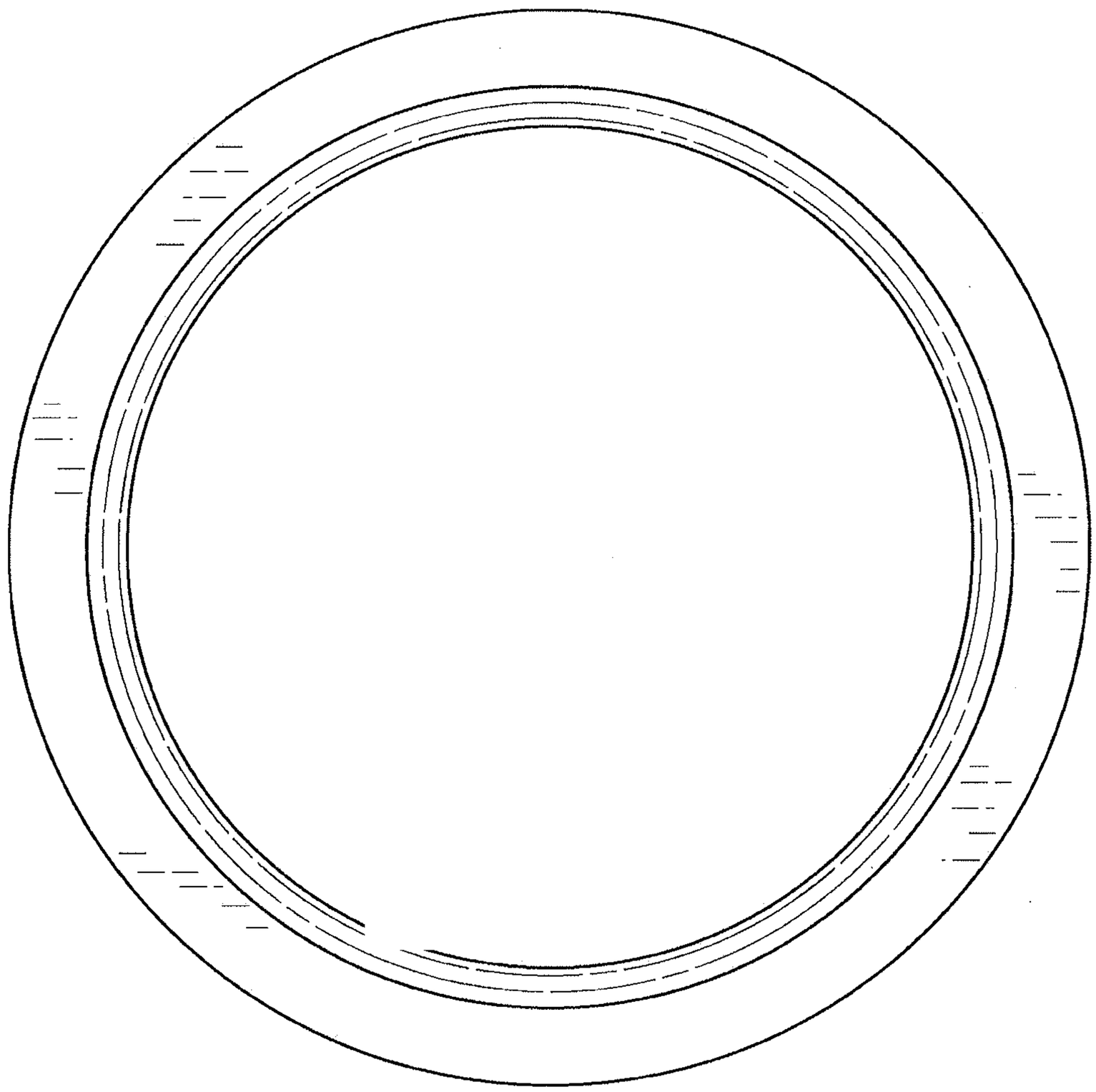

FIG.4

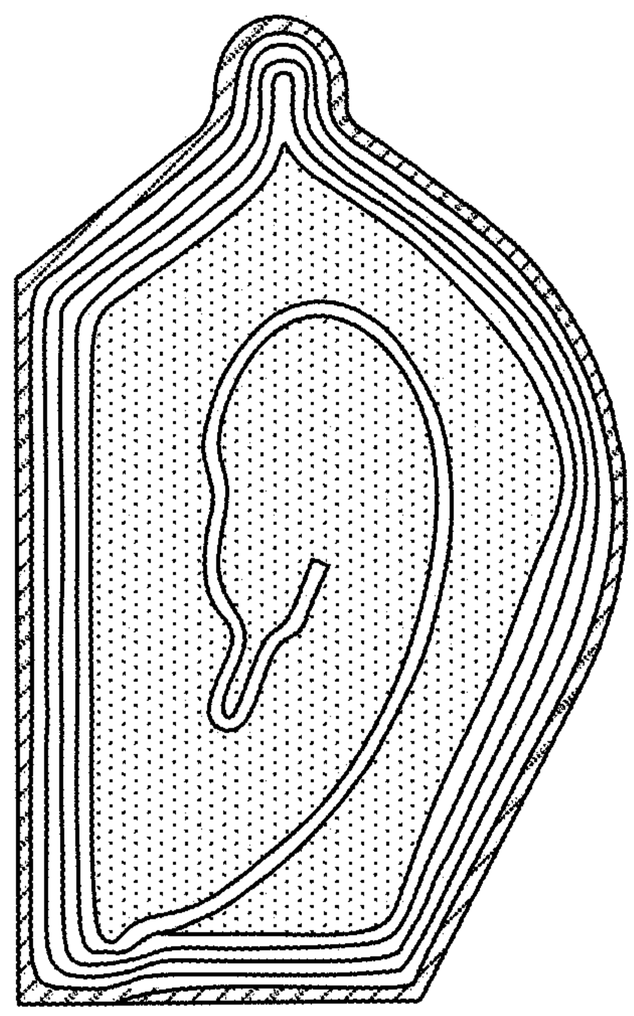

FIG. 5