US00D892341S

(12) United States Design Patent

Cheng et al.

(10) Patent No.: US D892,341 S
(45) Date of Patent: ** Aug. 4, 2020

(54) **INTRACAVITARY ULTRASONIC PROBE**

(71) Applicant: **EDAN INSTRUMENTS, INC.**, Shenzhen (CN)

(72) Inventors: **Jiudong Cheng**, Shenzhen (CN); **Hua Luo**, Shenzhen (CN)

(73) Assignee: **EDAN INSTRUMENTS, INC.**, Shenzhen (CN)

(**) Term: **15 Years**

(21) Appl. No.: **29/669,635**

(22) Filed: **Nov. 9, 2018**

(30) **Foreign Application Priority Data**

Jul. 10, 2018 (CN) 2018 3 0369316

(51) **LOC (12) Cl.** **24-02**

(52) **U.S. Cl.**
USPC **D24/187**

(58) **Field of Classification Search**
USPC D24/133, 137, 138, 141, 158, 160, 164, D24/165, 167, 170, 186, 187, 200; D10/57, 60, 78, 80

(Continued)

(56) **References Cited**

U.S. PATENT DOCUMENTS

D334,147 S * 3/1993 Aukstikalnis D10/80
5,381,795 A * 1/1995 Nordgren A61B 8/12 600/472

(Continued)

FOREIGN PATENT DOCUMENTS

CN 201430231079 * 7/2014

OTHER PUBLICATIONS

Edan USA Transducer, Transvaginal Arraye612UB 128Element—E612UB. Online, published date Nov. 14, 2019. Retrieved on Feb. 24, 2020 from URL: https://serfinitymedical.com/products/edan-usa-transducer-transvaginal-arraye612ub-128element-edan-usa-e612ub-1108312?variant=30913530167371&gclid=EAIaIQobChMIoY6d-szq5wIVCaCzCh30.*

Primary Examiner — Susan Bennett Hattan
Assistant Examiner — Omeed Agilee

(57) **CLAIM**

The ornamental design for an intracavitary ultrasonic probe, as shown and described.

DESCRIPTION

FIG. **1** is a perspective view of an intracavitary ultrasonic probe;
FIG. **2** is a front view of the intracavitary ultrasonic probe;
FIG. **3** is a rear view of the intracavitary ultrasonic probe;
FIG. **4** is a left side view of the intracavitary ultrasonic probe;
FIG. **5** is a right side view of the intracavitary ultrasonic probe;
FIG. **6** is an enlarged top view of the intracavitary ultrasonic probe;
FIG. **7** is an enlarged bottom view of the intracavitary ultrasonic probe;
FIG. **8** is an enlarged view of area **8** circumscribed in FIG. **1**;
FIG. **9** is an enlarged view of area **9** circumscribed in FIG. **1**;
FIG. **10** is an enlarged view of area **10** circumscribed in FIG. **1**; and,
FIG. **11** is an enlarged view of area **11** circumscribed in FIG. **5**.
The long dash lines in the drawings depict the boundaries of the enlarged views and form no part of the claimed design. The short dash line shown in FIG. **7** depict portions of the intracavitary ultrasonic probe that form no part of the claimed design.

1 Claim, 11 Drawing Sheets

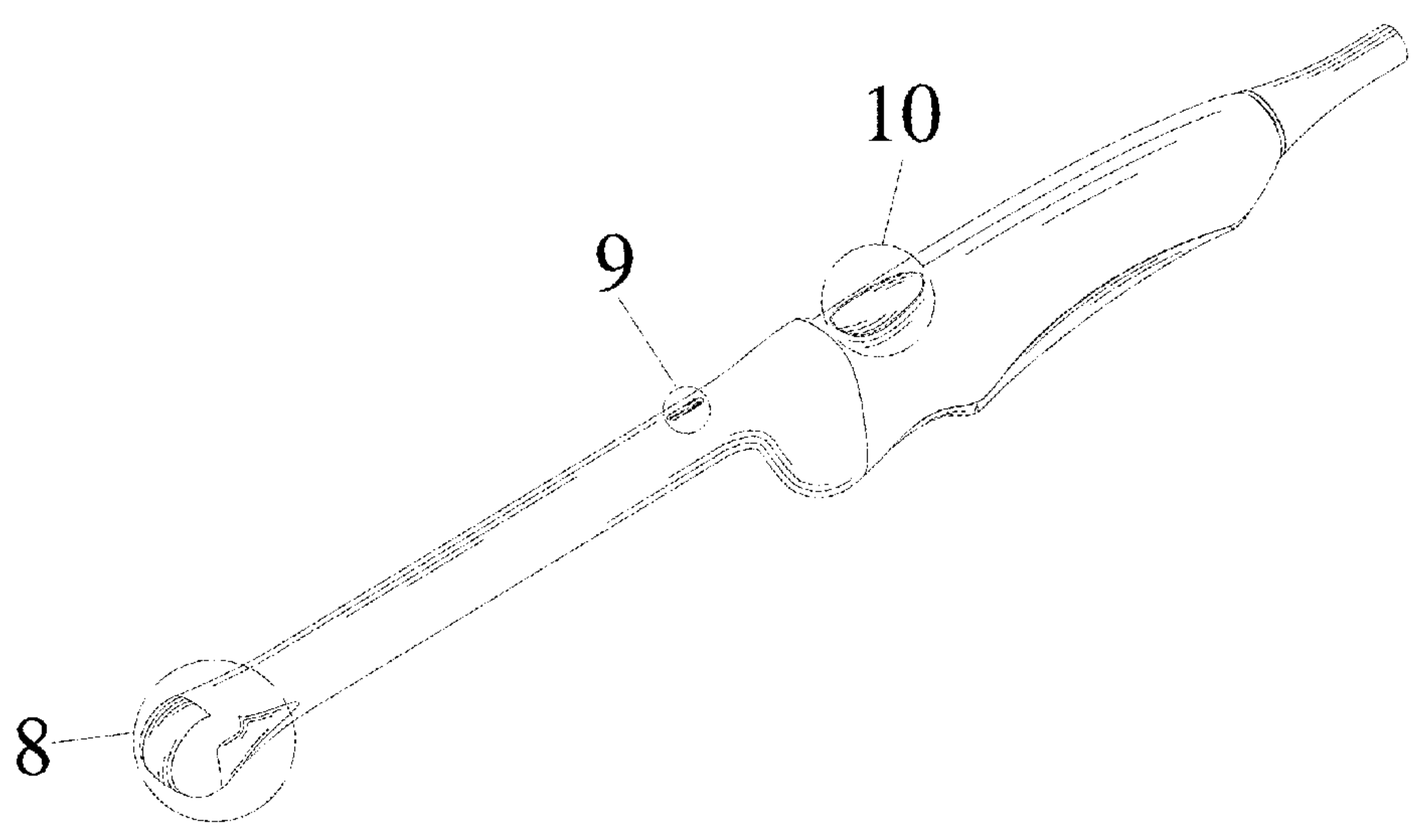

(58) **Field of Classification Search**
CPC A61B 5/0095; A61B 8/4444; G01S 7/5208
See application file for complete search history.

(56) **References Cited**

U.S. PATENT DOCUMENTS

D441,310	S	*	5/2001	Bauman	D10/78
D536,450	S	*	2/2007	Ryan	D24/144
D616,992	S	*	6/2010	Kitayama	D24/186
D697,627	S	*	1/2014	Takano	D24/187
D701,606	S	*	3/2014	Ohmukai	D24/187
D703,331	S	*	4/2014	Kitayama	D24/187
D703,333	S	*	4/2014	Saeki	D24/187
D703,822	S	*	4/2014	Moon	D24/187
D728,802	S	*	5/2015	Matsumura	D24/187
D748,808	S	*	2/2016	Matsumura	D24/187
D818,594	S	*	5/2018	Asai	D24/187
D822,218	S	*	7/2018	Asai	D24/187
2019/0090850	A1	*	3/2019	Gran	A61B 8/467

* cited by examiner

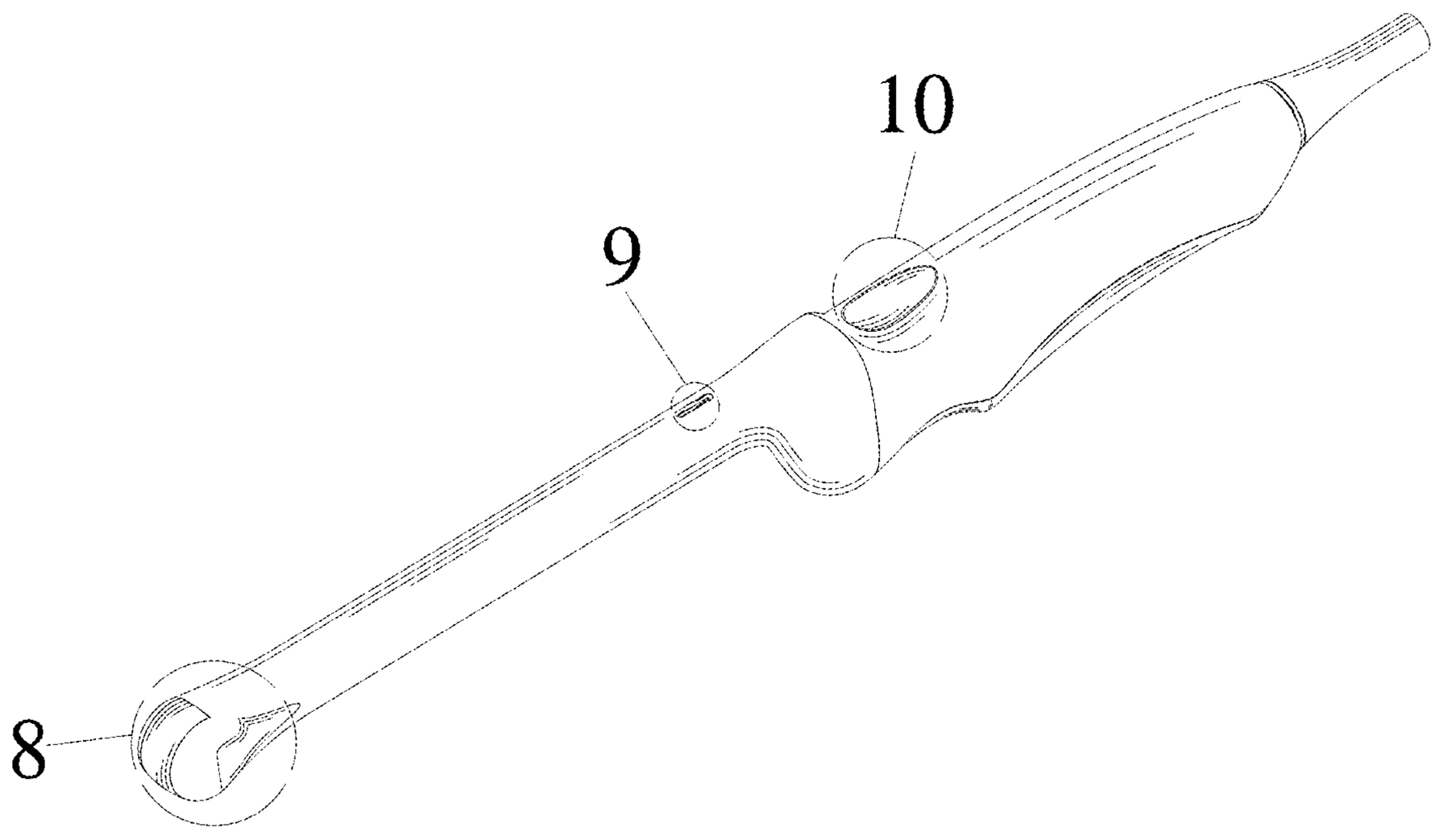

FIG. 1

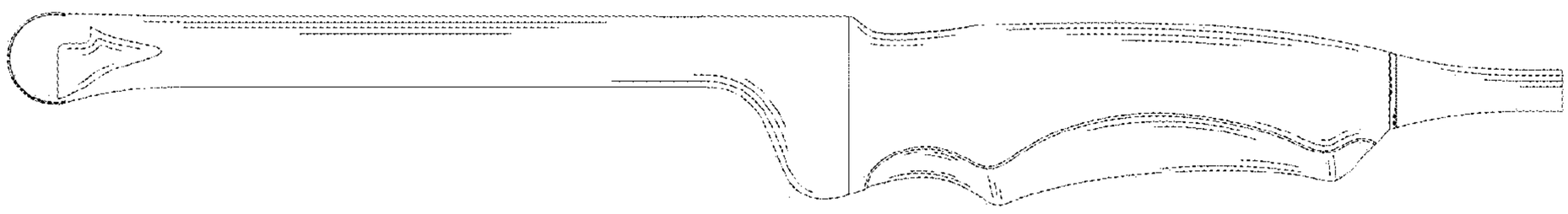

FIG. 2

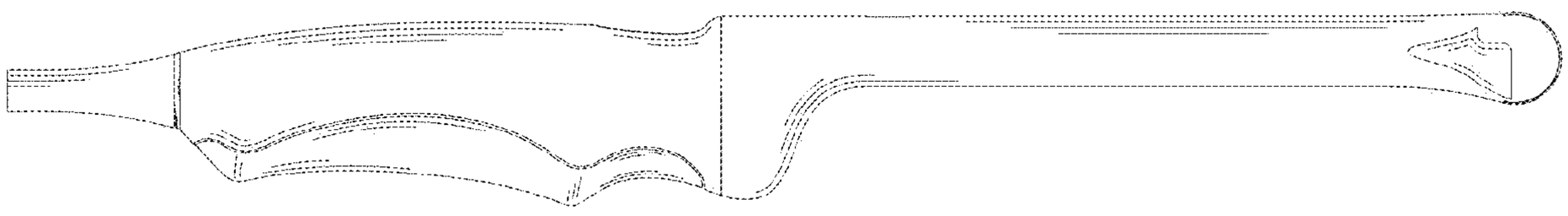

FIG. 3

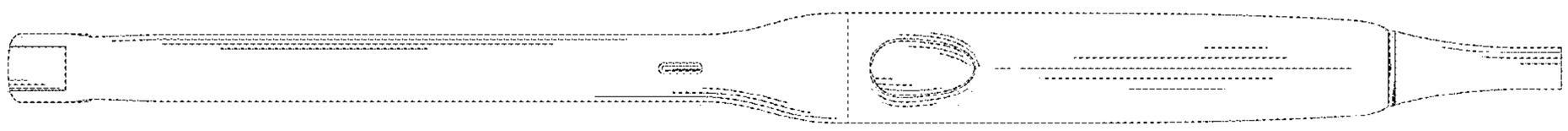

FIG. 4

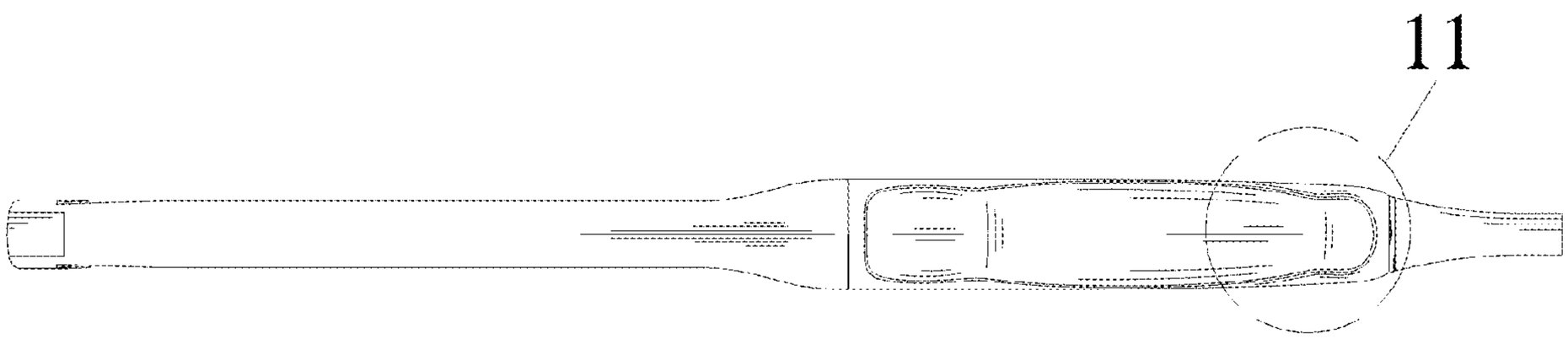

FIG. 5

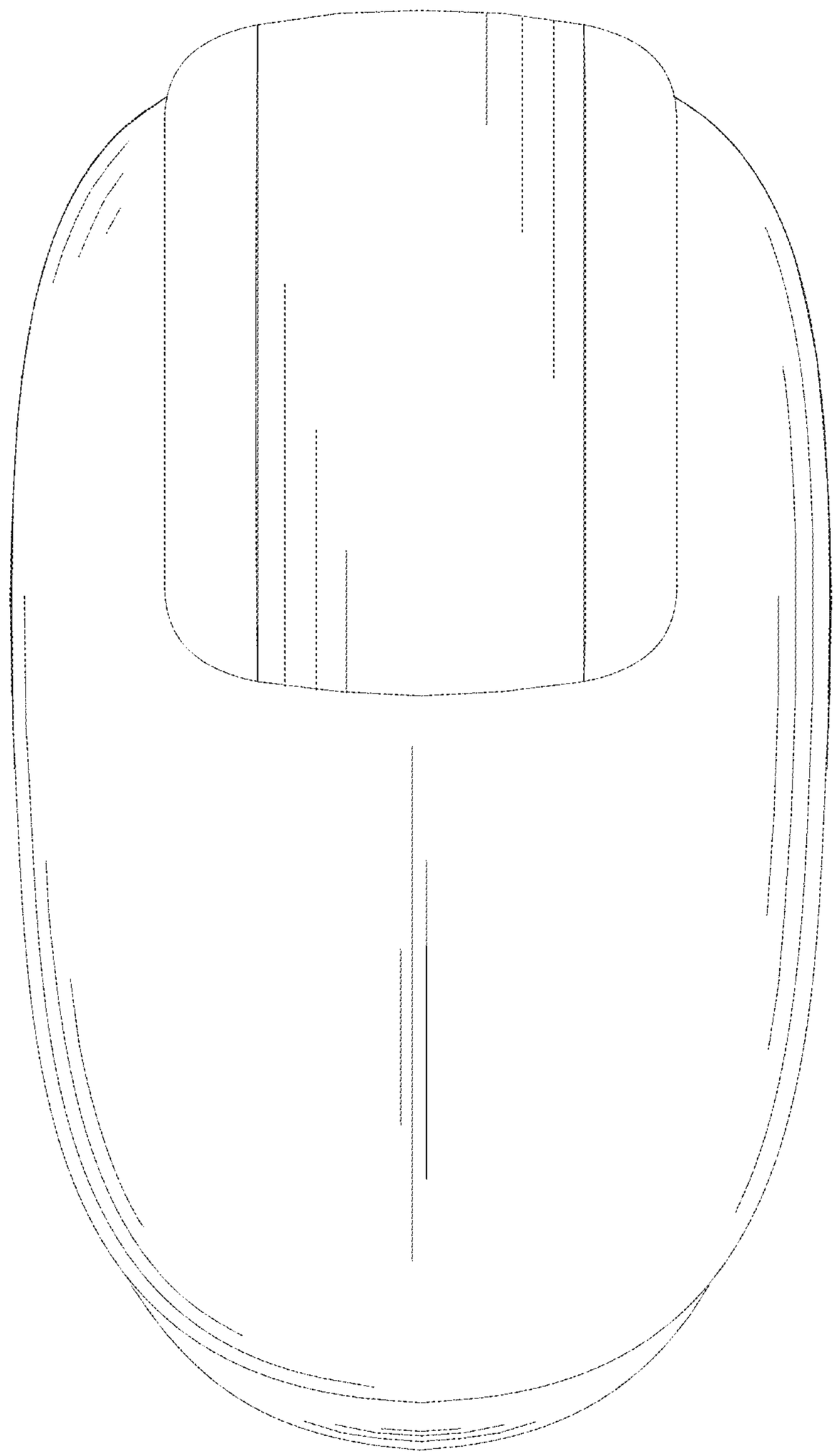

FIG. 6

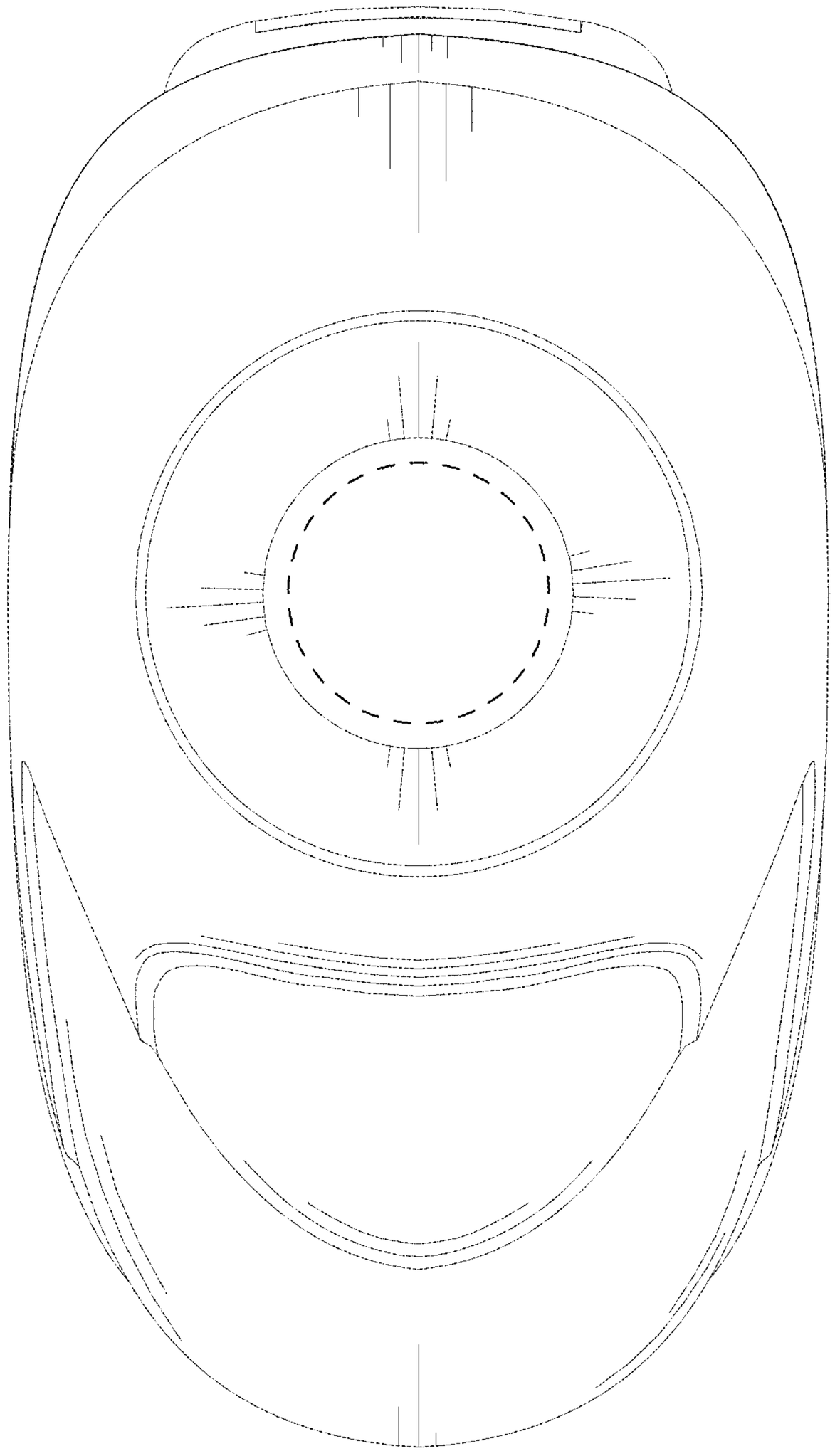

FIG. 7

FIG. 8

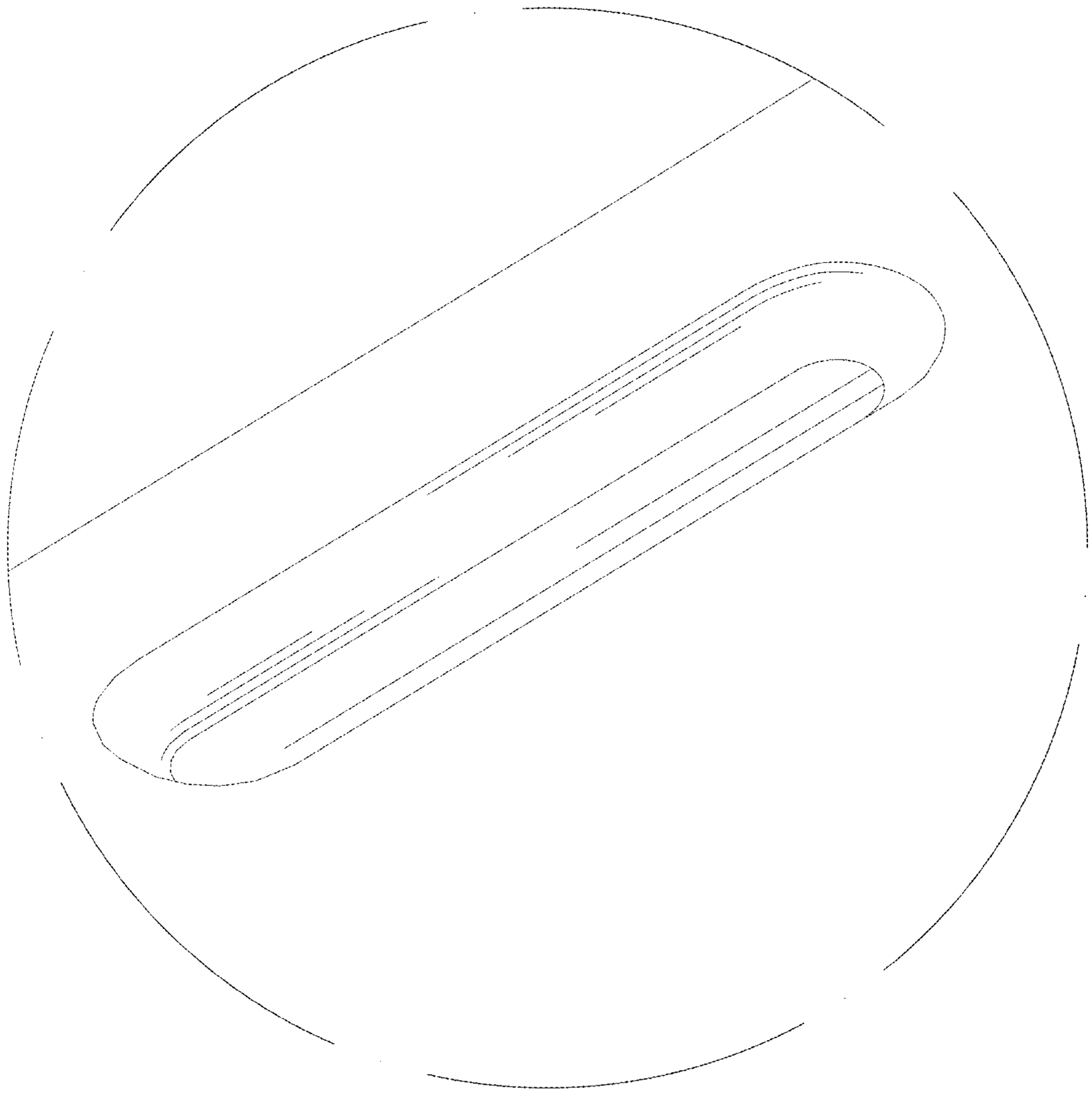

FIG. 9

FIG. 10

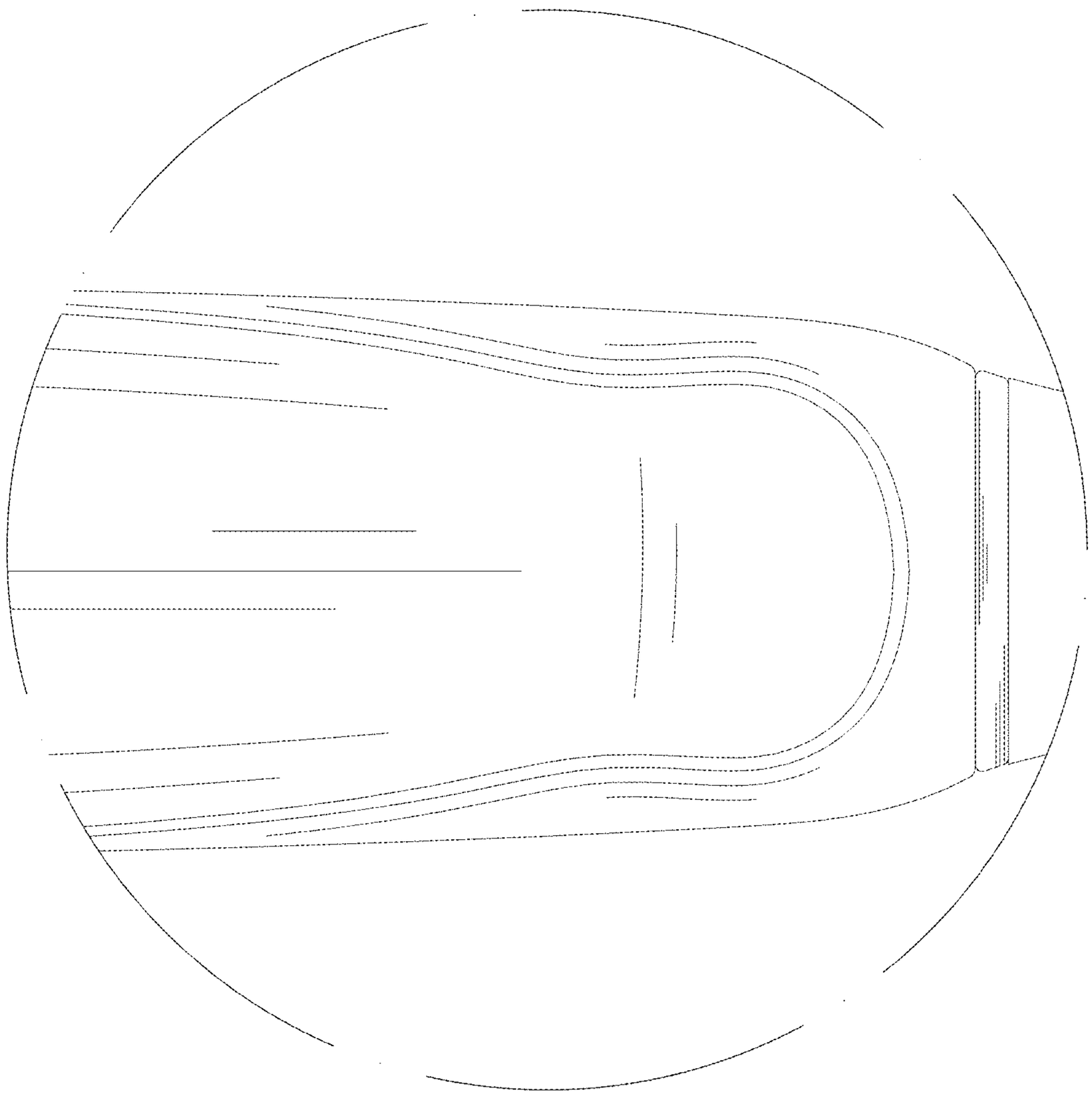

FIG. 11