US00D891566S

(12) United States Design Patent

Brodie et al.

(10) Patent No.: US D891,566 S
(45) Date of Patent: ** Jul. 28, 2020

(54) **BROADHEAD**

(71) Applicant: **Annihilator Broadheads, LLC**, Eagle, ID (US)

(72) Inventors: **Brandon Brodie**, Eagle, ID (US); **Micah Brown**, Auburn, CA (US)

(73) Assignee: **Annihilator Broadheads, LLC**, Eagle, ID (US)

(**) Term: **15 Years**

(21) Appl. No.: **29/688,976**

(22) Filed: **Apr. 25, 2019**

(51) **LOC (12) Cl.** **22-03**

(52) **U.S. Cl.**
USPC **D22/115**

(58) **Field of Classification Search**
USPC D22/102, 106, 107, 115, 117, 199; D21/387, 567, 570, 571, 746
CPC .. F42B 6/08; F42B 6/04; F42B 12/362; A61F 2002/30306; A61F 2230/0097
See application file for complete search history.

(56) **References Cited**

U.S. PATENT DOCUMENTS

2,467,838 A * 4/1949 Lust F42B 6/04 473/581
2,873,973 A * 2/1959 Hauch F42B 6/08 473/583
2,880,000 A * 3/1959 Unger F42B 6/08 473/584
4,341,391 A * 7/1982 Anderson F42B 6/08 30/337
4,565,377 A * 1/1986 Troncoso, Jr. F42B 6/04 473/584
D310,553 S * 9/1990 Kania D22/115
5,064,202 A * 11/1991 Barner F42B 6/08 473/583
5,192,081 A * 3/1993 Cooper F42B 6/08 30/304
D379,210 S * 5/1997 Hartmann D21/387
D400,957 S * 11/1998 Botruff D22/115
D425,943 S * 5/2000 Kurtz D21/387
6,077,179 A * 6/2000 Liechty, II F42B 6/08 473/582
7,025,697 B2 * 4/2006 Mizek F42B 6/08 473/583

(Continued)

OTHER PUBLICATIONS

"Annihilator Broadhead Re-Test" [online]. Lusk Archery Adventures. [Published on Jan. 23, 2020]. Retrieved from the Internet: <https://www.youtube.com/watch?v=462cDTIh3yM>.*

Primary Examiner — Khawaja Anwar
Assistant Examiner — Mojtaba Tehrani

(57) **CLAIM**

We claim the ornamental design for a broadhead, as shown and described.

DESCRIPTION

FIG. **1** is a side perspective view of a broadhead, showing our new design;
FIG. **2** is a side elevation view thereof;
FIG. **3** is another side elevation view thereof with a rotational offset of approximately 60 degrees from that of FIG. **2**;
FIG. **4** is a right side elevation view thereof with a rotational offset of approximately 30 degrees from that of FIG. **2**;
FIG. **5** is a left side elevation view thereof with a rotational offset of approximately 90 degrees from that of FIG. **2**;
FIG. **6** is a top plan view thereof; and,
FIG. **7** is a bottom plan view thereof.
The broken lines shown represent unclaimed subject matter and form no part of the claimed design.

1 Claim, 6 Drawing Sheets

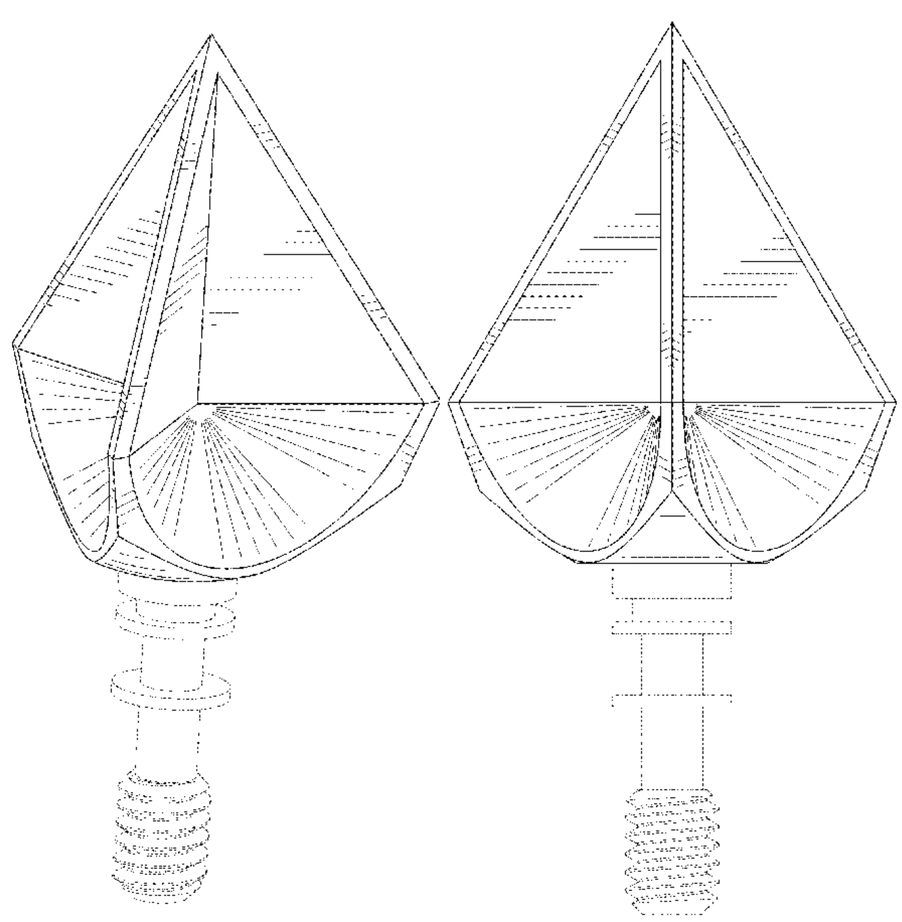

(56) **References Cited**

U.S. PATENT DOCUMENTS

7,037,222	B2 *	5/2006	Mizek	F42B 6/08 473/583
7,434,684	B1 *	10/2008	Mabra	F41B 5/14 206/315.11
D630,700	S *	1/2011	Fanizzi	D22/107
D630,701	S *	1/2011	Fanizzi	D22/107
7,905,795	B1 *	3/2011	Nuno	F42B 6/08 473/253
8,496,549	B2 *	7/2013	Couture	F42B 6/08 473/583
8,512,178	B2 *	8/2013	Peetz	F42B 6/08 473/583
D750,723	S *	3/2016	Rager	D22/107
9,410,774	B1 *	8/2016	Gallo	F42B 6/04
9,423,504	B1 *	8/2016	Gossett	G01S 19/19
D844,090	S *	3/2019	Dahl, II	D22/107
D847,937	S *	5/2019	Isringhausen	D22/115
2010/0248871	A1 *	9/2010	Nick	F42B 12/385 473/570

* cited by examiner

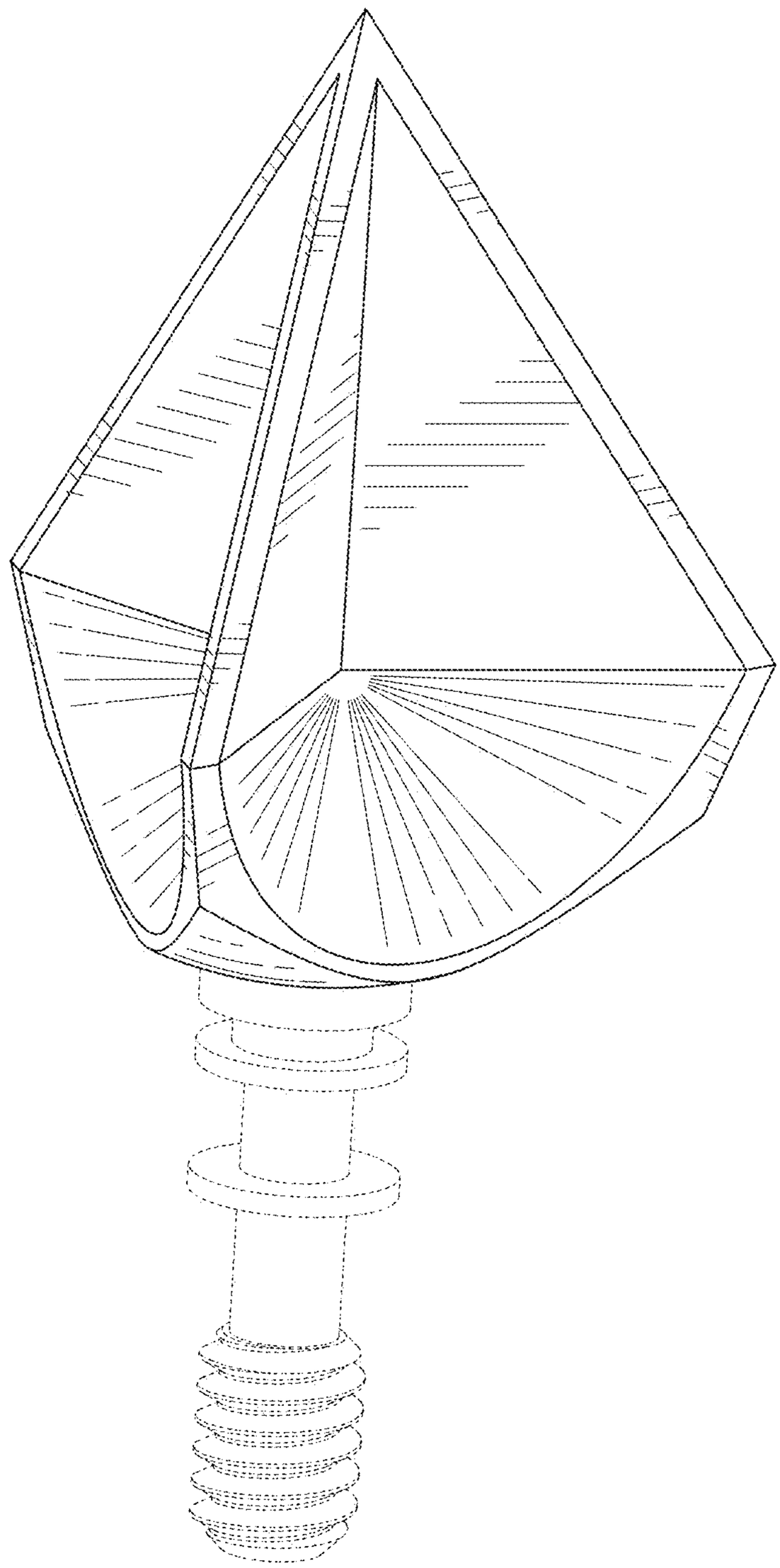

FIG. 1

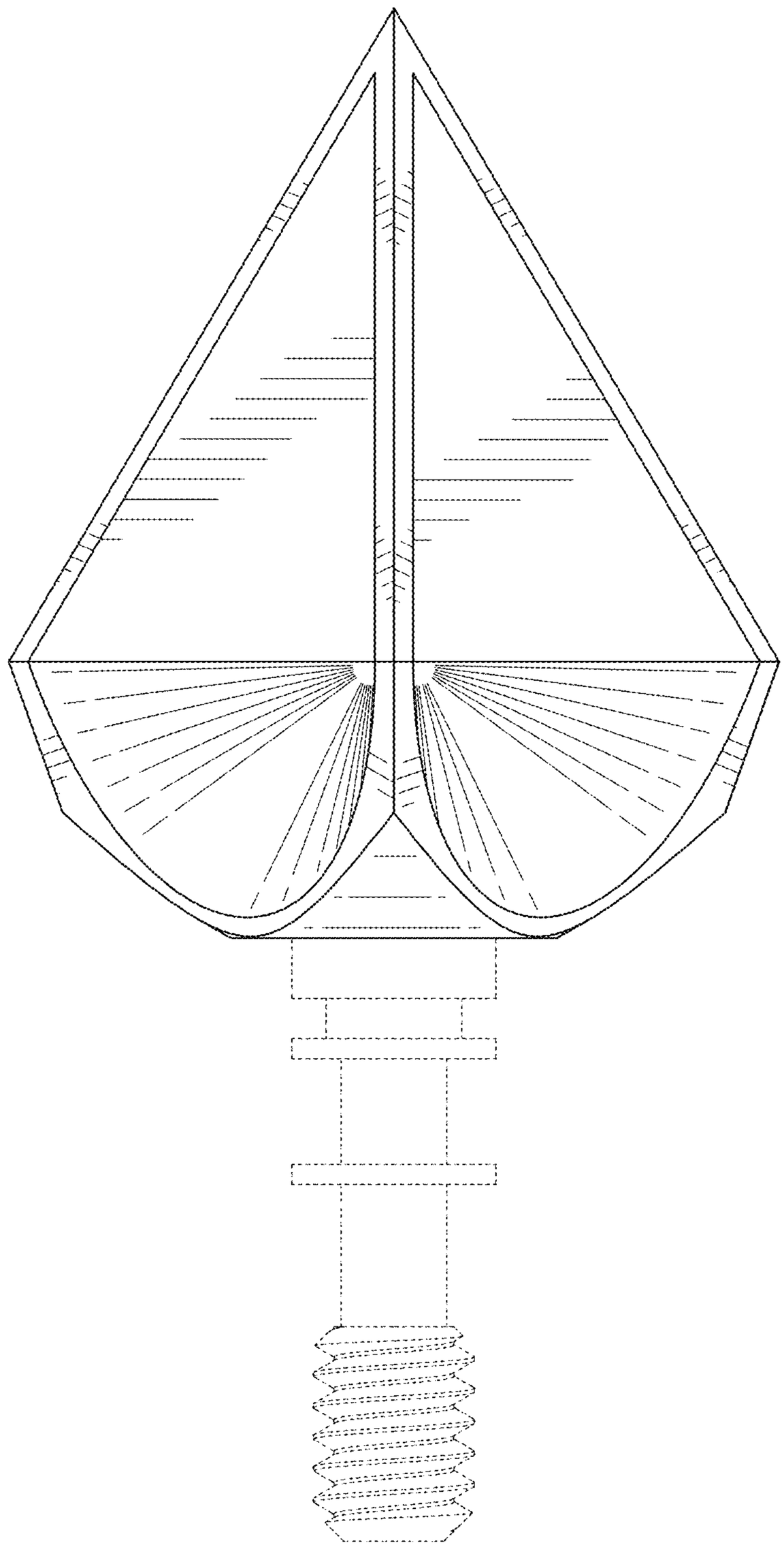

FIG. 2

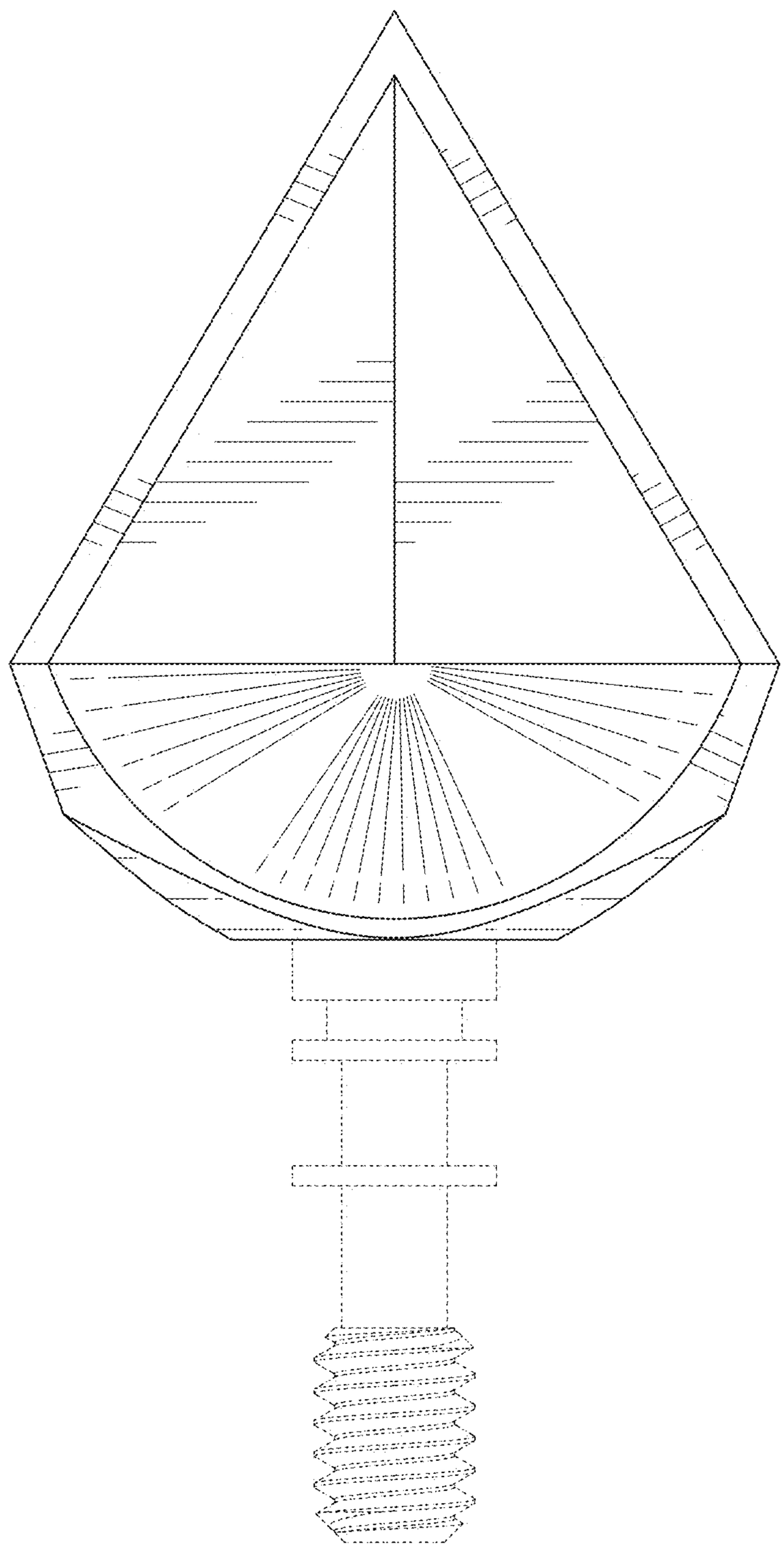

FIG. 3

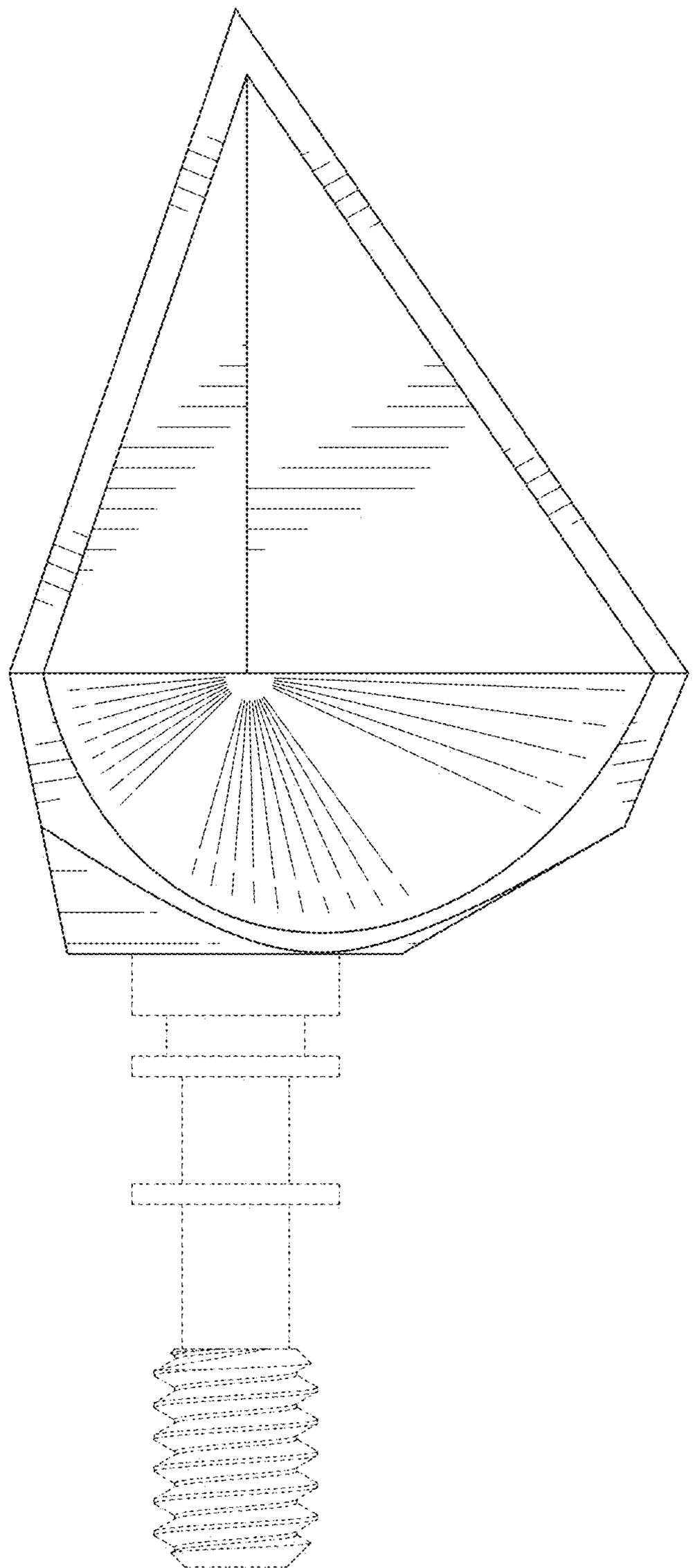

FIG. 4

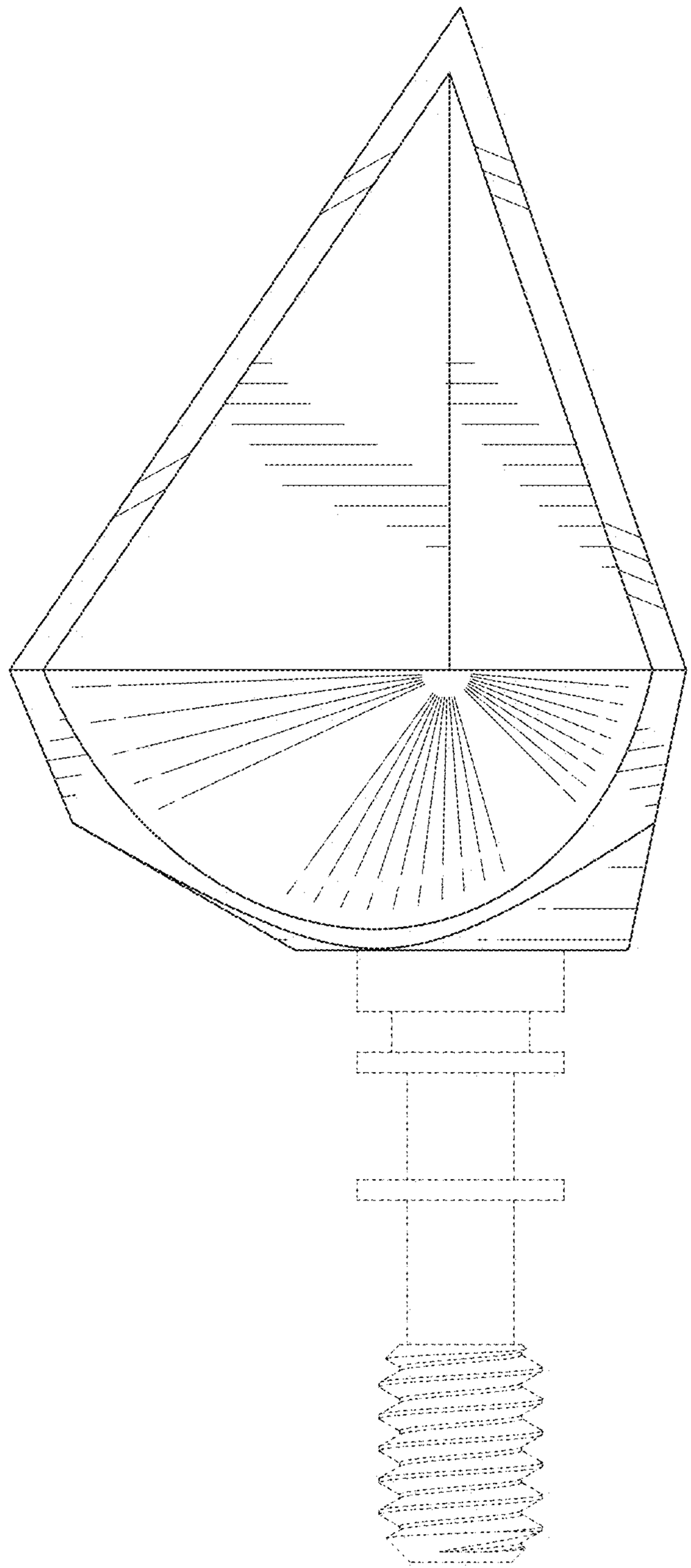

FIG. 5

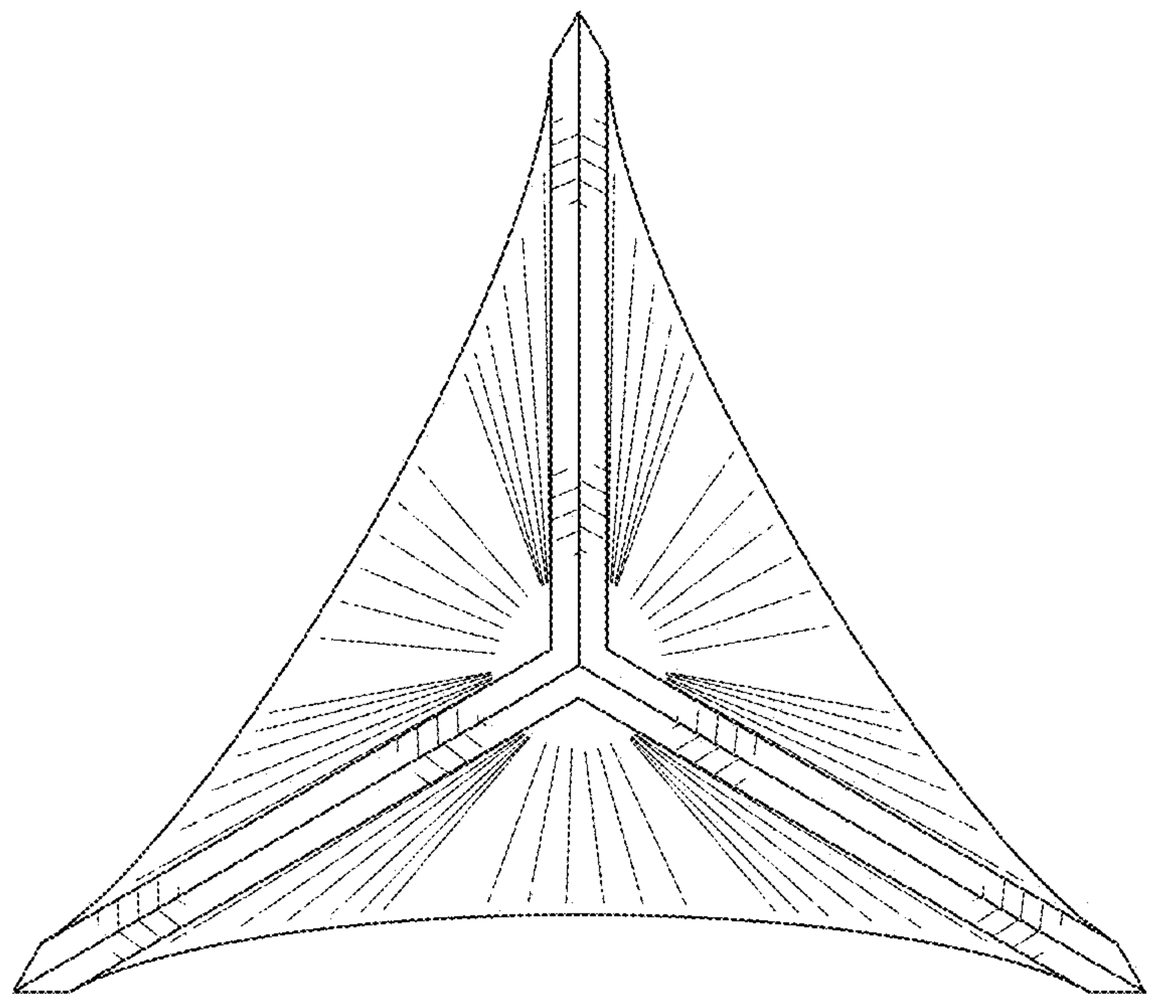

FIG. 6

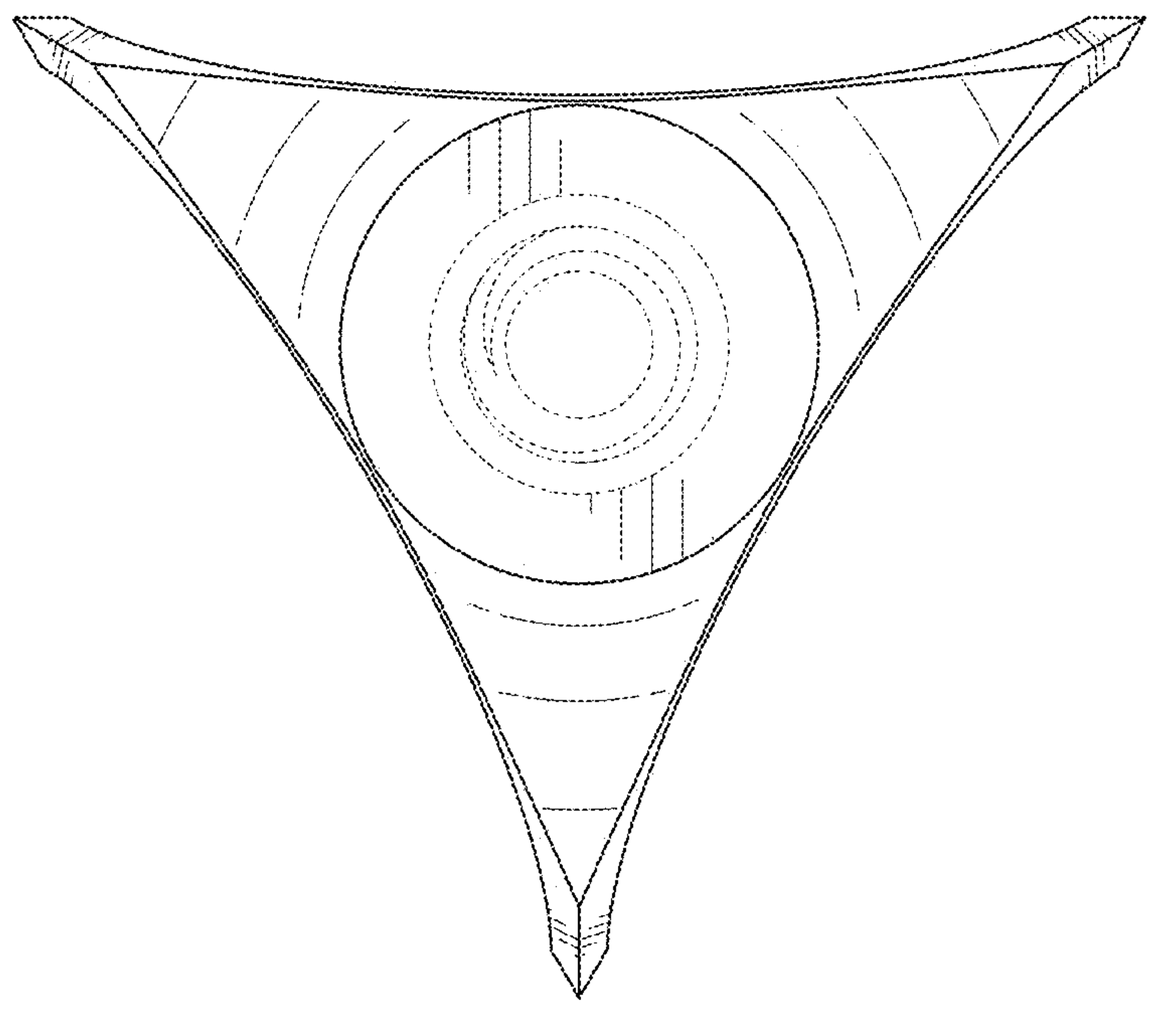

FIG. 7