US00D891232S

(12) United States Design Patent

Zhang

(10) Patent No.: US D891,232 S
(45) Date of Patent: ** Jul. 28, 2020

(54) **VESA MOUNT ADAPTOR BRACKET**

(71) Applicant: **Lexiao Zhang**, Montreal (CA)

(72) Inventor: **Lexiao Zhang**, Montreal (CA)

(73) Assignee: **GLADIATOR JOE INC.**, Quebec (CA)

(**) Term: **15 Years**

(21) Appl. No.: **29/692,144**

(22) Filed: **May 23, 2019**

(51) **LOC (12) Cl.** **08-05**

(52) **U.S. Cl.**
USPC **D8/354**; D14/238

(58) **Field of Classification Search**
USPC D8/354, 349, 355, 363, 373, 380, 387, D8/388, 389; D20/22, 27, 42, 43; D14/238
CPC H05K 5/0204; H05K 7/14; F16M 13/02; H04N 5/655; H04N 5/64; G06F 1/1601; G06F 1/16; A45F 5/00; A45F 5/021; A45F 2200/0516; A45F 2200/0508; A45F 2200/0525
See application file for complete search history.

(56) **References Cited**

U.S. PATENT DOCUMENTS

4,717,106	A	1/1988	Bies et al.	
6,378,828	B1	4/2002	Valiulis et al.	
7,338,019	B2	3/2008	Liu et al.	
D621,390	S	8/2010	Skull et al.	
D638,023	S	5/2011	Skull et al.	
D671,820	S	12/2012	Henderson	
9,759,376	B2	9/2017	Xiang et al.	
9,797,547	B2 *	10/2017	Meyer	F16M 13/02
D822,453	S	7/2018	Kanter	
D822,454	S	7/2018	Kanter	
D822,650	S	7/2018	Kanter	
D823,093	S	7/2018	Kanter	
D823,094	S	7/2018	Kanter	
D823,286	S	7/2018	Kanter	
D829,531	S *	10/2018	Kanter	D8/354
D829,533	S *	10/2018	Kanter	D8/354
D832,860	S	11/2018	Murphey et al.	

(Continued)

FOREIGN PATENT DOCUMENTS

DE	202017002570	U1	6/2017
WO	2004061359	A1	7/2004

OTHER PUBLICATIONS

"VESA Mount Kit for Apple 21.5 and 27 iMac Display (STAND-MACB)" by VIVO Adapter, Found Online on [May 16, 2019] https://i5walmartimages.com/asr/b7a9bc90-1c07-46cb-8e7b-60d44544330e_1.18080d654d88aa8015ec419e9f043579.png?odnWidth=undefined&odnHeight=undefined&odnBg=ffffff.

(Continued)

Primary Examiner — Keli L Hill
Assistant Examiner — Harold E Blackwell, II
(74) *Attorney, Agent, or Firm* — Legalforce RAPC Worldwide

(57) **CLAIM**

The ornamental design for a VESA mount adaptor bracket, as shown and described.

DESCRIPTION

FIG. **1** is a front top right side perspective view for a VESA mount adaptor bracket, showing my new design;
FIG. **2** is a front elevational view of FIG. **1** thereof;
FIG. **3** is a rear elevational view of FIG. **1** thereof;
FIG. **4** is a left side elevational view of FIG. **1** thereof;
FIG. **5** is a right side elevational view of FIG. **1** thereof;
FIG. **6** is a top plan view of FIG. **1** thereof;
FIG. **7** is a bottom plan view of FIG. **1** thereof; and,
FIG. **8** is an exploded front top right side perspective view of VESA mount adaptor bracket of FIG. **1** thereof.
The broken lines indicate unclaimed portions of the design and form no part of the claimed design.

1 Claim, 8 Drawing Sheets

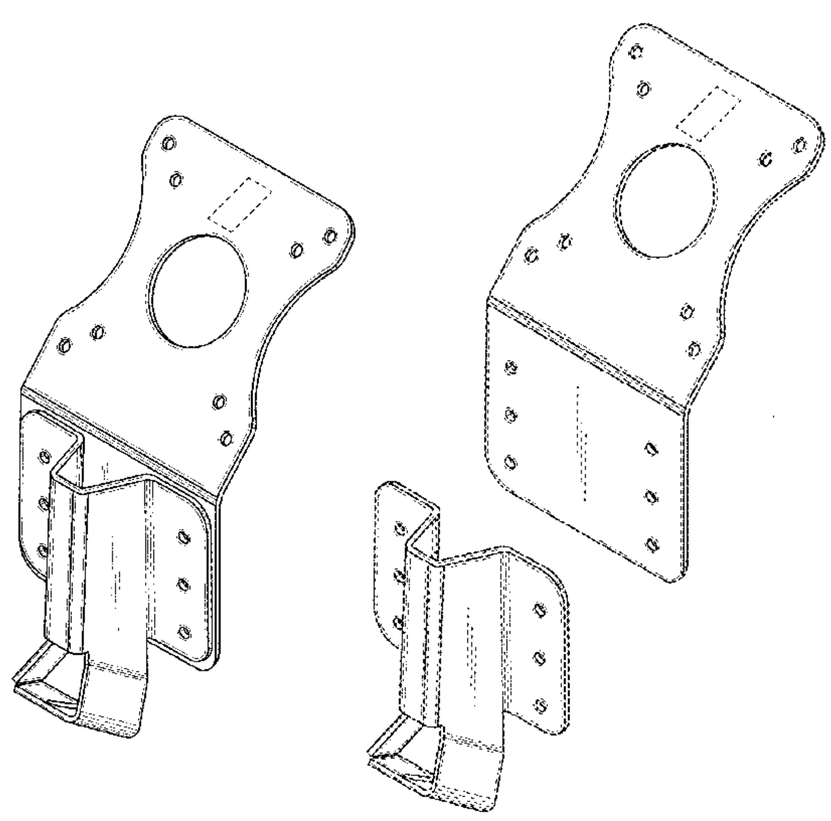

(56) **References Cited**

U.S. PATENT DOCUMENTS

D833,851	S	11/2018	Kanter	
10,281,720	B2	5/2019	Huang et al.	
D852,788	S *	7/2019	Kanter	D14/238
2002/0174519	A1	11/2002	Huang	
2003/0071181	A1	4/2003	Valiulis et al.	
2004/0012917	A1	1/2004	Jung et al.	
2007/0090250	A1	4/2007	O'Keene	
2008/0067298	A1	3/2008	Mossman et al.	
2008/0067305	A1	3/2008	Mossman et al.	
2008/0099646	A1	5/2008	Kobara et al.	
2009/0039221	A1	2/2009	Powers et al.	
2009/0050760	A1	2/2009	Duff	
2010/0065702	A1	3/2010	Hsu	
2011/0157805	A1	6/2011	Mi et al.	
2012/0025046	A1	2/2012	Yen	

OTHER PUBLICATIONS

"VESA Adapter for Samsung Monitors" by Humancentric, Found Online on [May 16, 2019] https://cdn.shopify.com/s/files/1/0750/2813/files/101-1011-dimensions.png?17783914482415288115.

"VESA Mount Adapter Bracket for Samsung Monitors" by Humancentric, Found Online on [May 16, 2019] https://images-na.ssl-images-amazon.com/images/I/61%2BfjiQunOL._ SL1500_.jpg.

"Mini Mount & Cable Cover Mini" by Yumpu, Found Online on [May 16, 2019] https://www.yumpu.com/en/document/read/25801097/mini-mount-cable-cover-ministand-minipc2-rmcom.

"Ultra Slim Small Size Profile TV Bracket Wall Mount" by Kaloc, Found Online on [May 16, 2019] http://tvstand.my/image/cache/data/%20V6/LCD_TV_Wall_Mount_Tilt_Bracket_for_10_to_40_inch_Screen_E1_blk_6-960x960.jpg.

U.S. Trademark Registration No. 4825669; Logo Mark—Gladiator Joe Registration date: Oct. 6, 2015 Publication date: Jul. 21, 2015.

U.S. Trademark Registration No. 88421041; Logo Mark—G J Registration date: Oct. 6, 2015 Publication date: Jul. 21, 2015.

U.S. Trademark Registration No. 88421041; Logo Mark—I Am Gladiator I Am Victorious Registration date: Sep. 26, 2017 Publication date: Sep. 10, 2016.

"Samsung Monitor VESA Adapter Bracket—GJ0A0052-R2" by Gladiator Joe, Found Online on [May 16, 2019] https://gladiatorjoe.com/wp-content/uploads/2017/10/gladiatorjoe_monitor_vesa_adapter_GJ0A0052-R2_WEBSITE-300x300.jpg.

"Dell Monitor VESA Adapter Bracket—GJ0A0039-R2" by Gladiator Joe, Found Online on [May 16, 2019] https://gladiatorjoe.com/wp-content/uploads/2017/11/gladiatorjoe_monitor_vesa_adapter_GJ0A0039-R2_SHADOW-300x300.jpg.

* cited by examiner

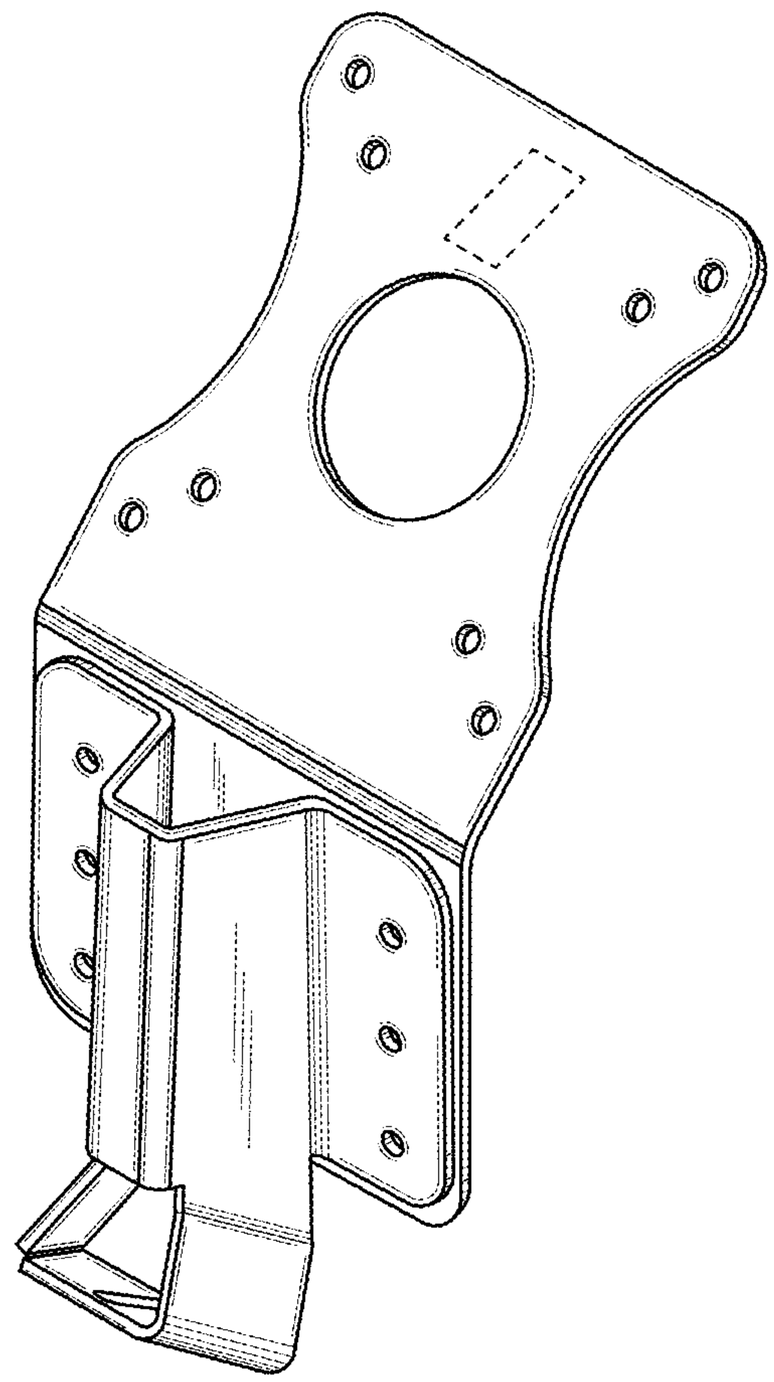

FIG. 1

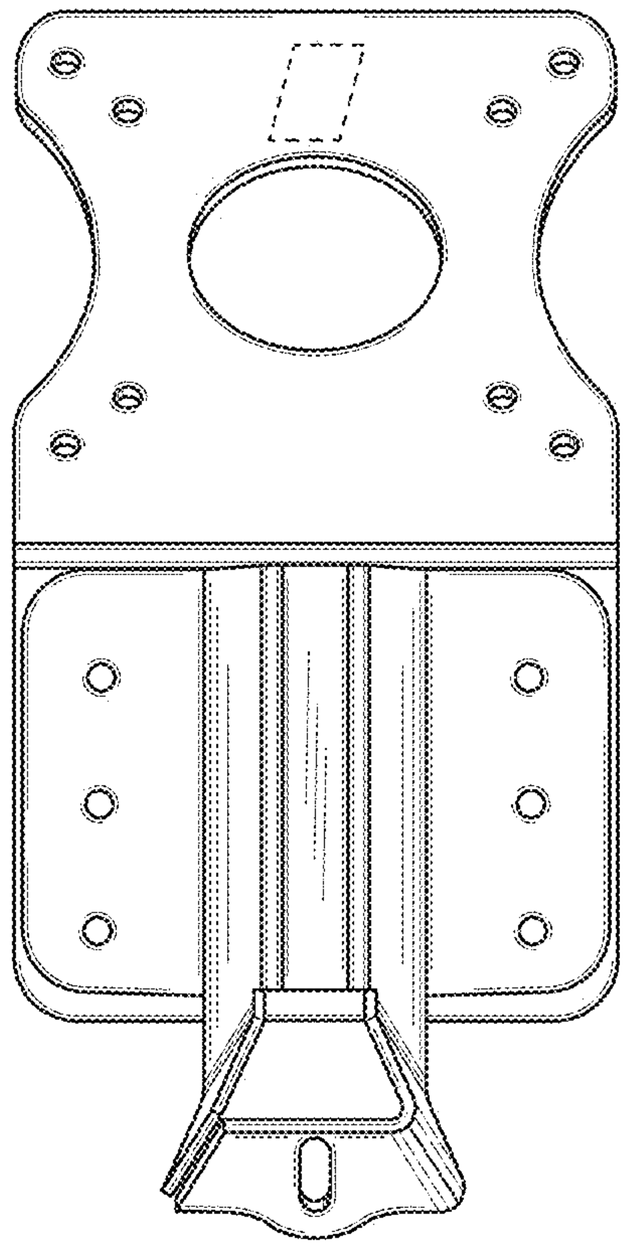

FIG. 2

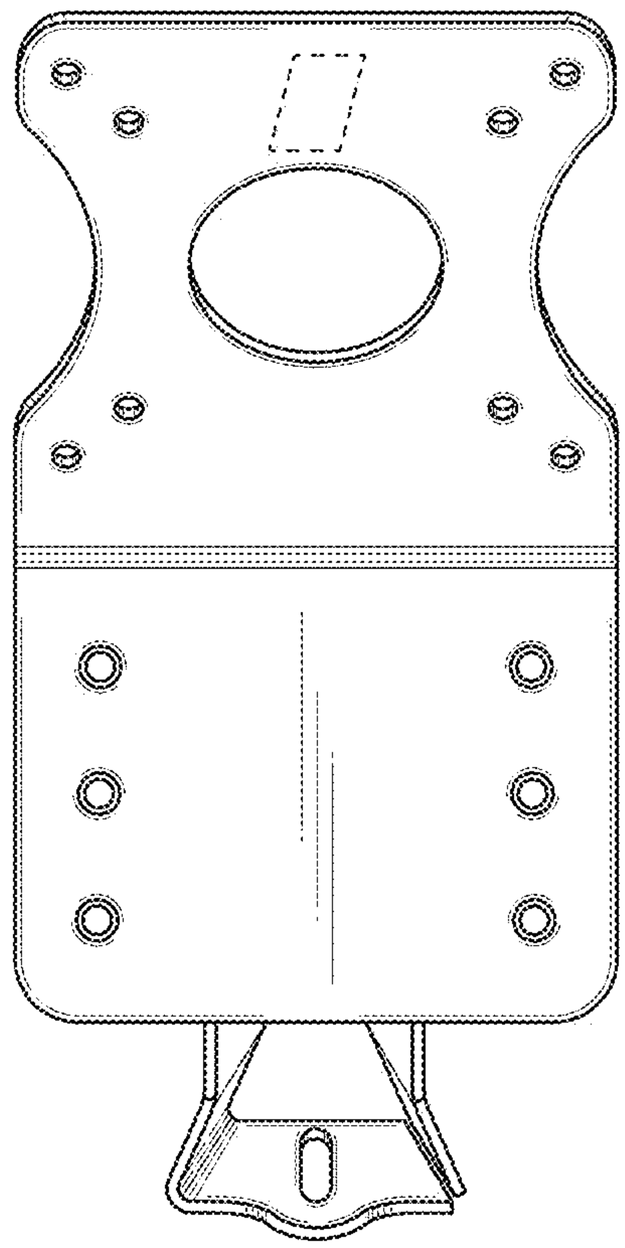

FIG. 3

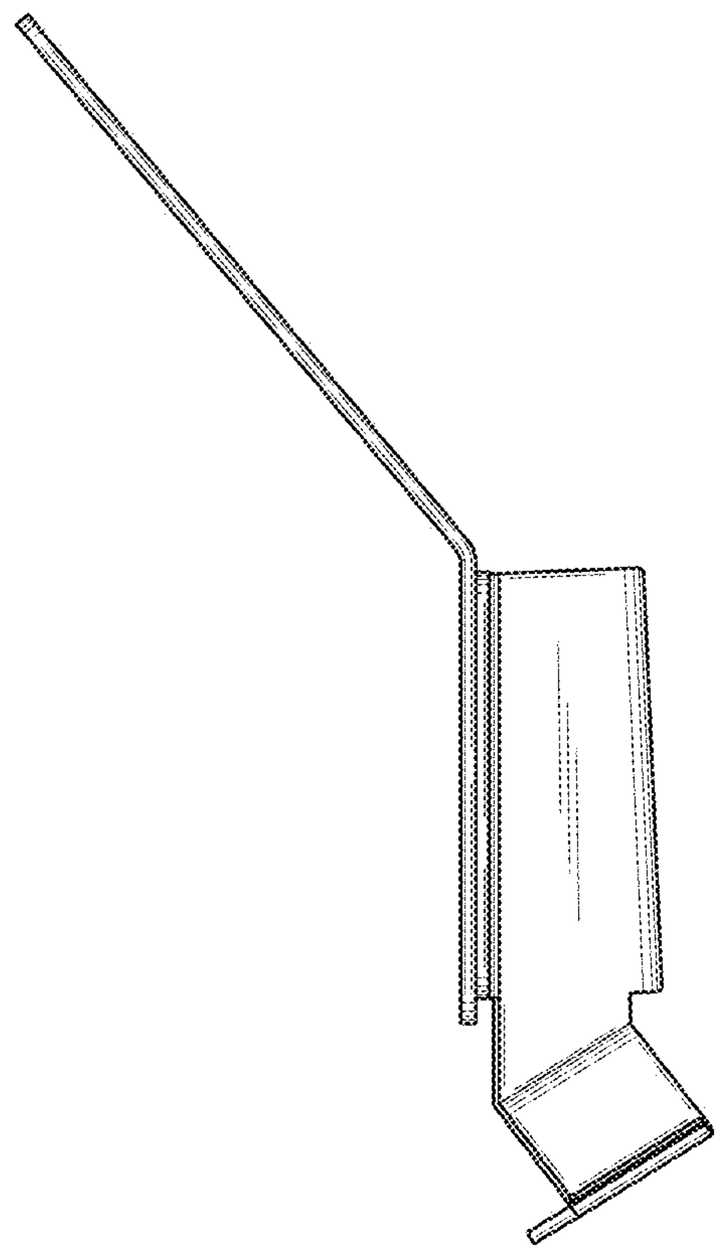

FIG. 4

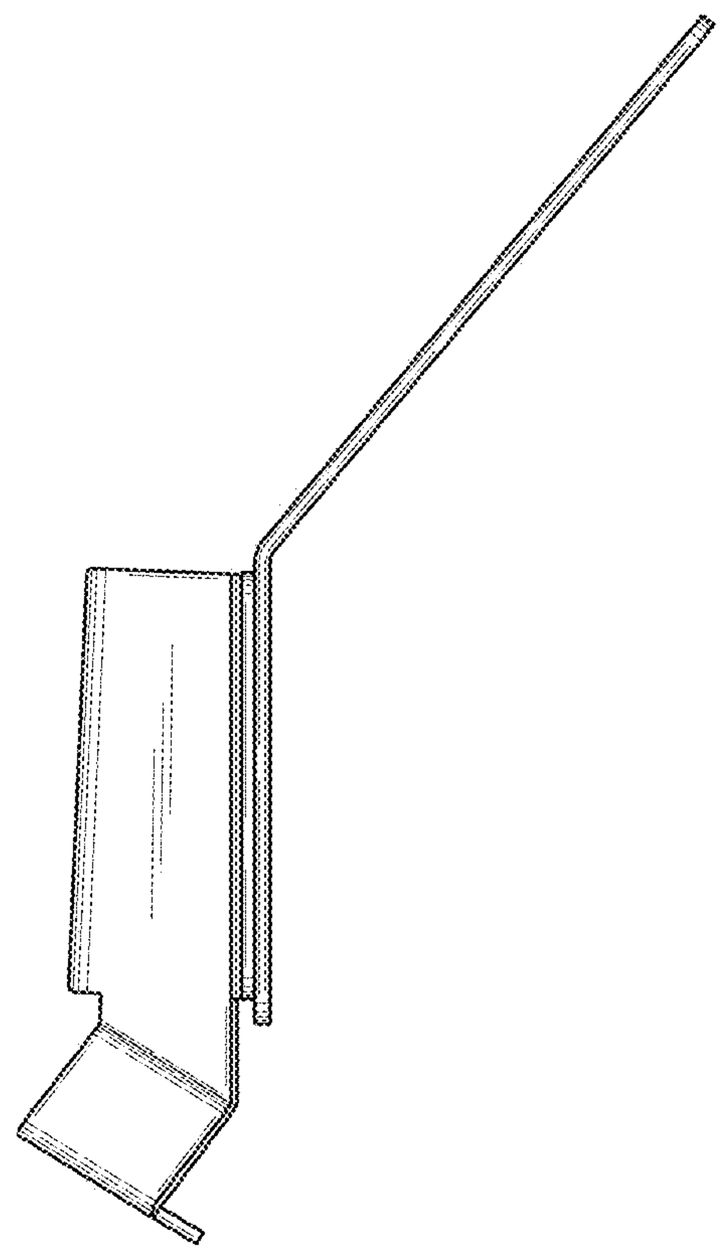

FIG. 5

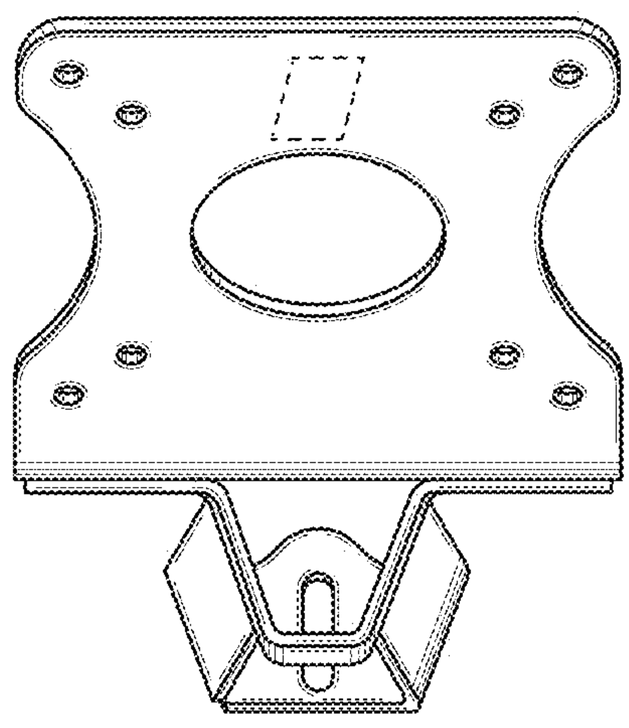

FIG. 6

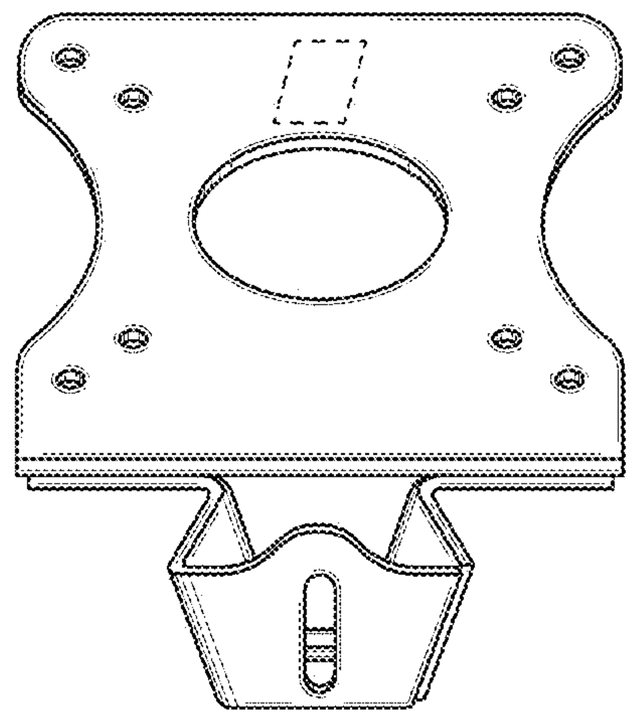

FIG. 7

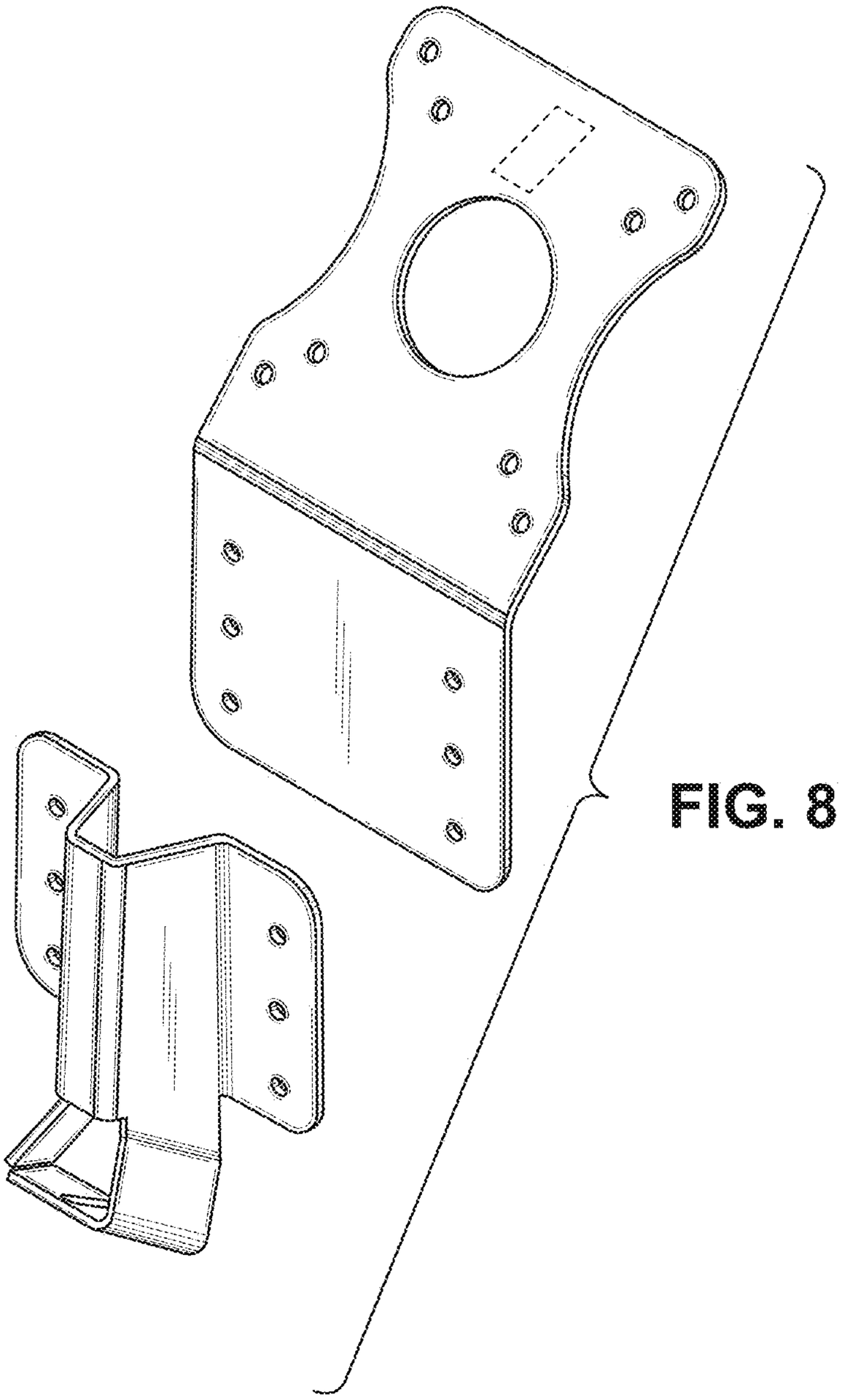

FIG. 8