US00D890702S

(12) United States Design Patent

Jhun et al.

(10) Patent No.: US D890,702 S
(45) Date of Patent: ** Jul. 21, 2020

(54) **MULTIHEAD CABLE CONNECTOR**

(71) Applicant: **Crestron Electronics, Inc.**, Rockleigh, NJ (US)

(72) Inventors: **Sae Jhun**, Bayside, NY (US); **Wendy Feldstein**, Old Tappan, NJ (US)

(73) Assignee: **Crestron Electronics, Inc.**, Rockleigh, NJ (US)

(**) Term: **15 Years**

(21) Appl. No.: **29/678,109**

(22) Filed: **Jan. 25, 2019**

(51) **LOC (12) Cl.** **13-03**

(52) **U.S. Cl.**
USPC **D13/133**; D13/146

(58) **Field of Classification Search**
USPC D11/13, 29, 206; D13/100–101, 133, D13/139.7, 146, 147, 154, 184, 199; D14/144, 239, 256, 393, 432, 435.1; D21/470; D24/129; D8/349; D25/120, D25/128, 131, 133; D26/129
CPC H01R 13/53; H01R 13/52; H01R 13/5295; H01R 27/00; H01R 31/02; H01R 31/06; H05K 5/0217; H02J 7/0044
See application file for complete search history.

(56) **References Cited**

U.S. PATENT DOCUMENTS

D252,271	S	*	7/1979	Jonsson	D13/147
D418,816	S	*	1/2000	Wu	D13/146
D519,929	S	*	5/2006	Huang	D13/147
D550,158	S	*	9/2007	Victor	D13/133
D559,193	S	*	1/2008	Stavoe	D13/133
D651,977	S	*	1/2012	Lee	D13/139.1
D783,541	S	*	4/2017	Minn	D13/153
D801,975	S	*	11/2017	Qin	D14/435.1
D833,398	S	*	11/2018	Levy	D13/146
D840,342	S	*	2/2019	Levy	D13/133
D866,476	S	*	11/2019	Shen	D13/146
D884,639	S	*	5/2020	Jhun	D13/133
2010/0167580	A1	*	7/2010	Lee	H01R 13/506 439/490

* cited by examiner

Primary Examiner — Karen E Kearney
Assistant Examiner — Michael Chong
(74) *Attorney, Agent, or Firm* — Crestron Electronics, Inc.

(57) **CLAIM**

The ornamental design for a multihead cable connector, as shown and described.

DESCRIPTION

FIGS. **1** and **2** illustrate a top-right perspective view of a multihead cable connector.
FIG. **3** illustrates bottom-left perspective view of a multihead cable connector.
FIG. **4** illustrates a front elevation view of a multihead cable connector.
FIG. **5** illustrates a back elevation view of a multihead cable connector.
FIG. **6** illustrates a right elevation view of a multihead cable connector.
FIG. **7** illustrates a left elevation view of a multihead cable connector.
FIG. **8** illustrates a top plan view of a multihead cable connector; and,
FIG. **9** illustrates a bottom plan view of a multihead cable connector.
The broken line portion of the figure drawings is included to show unclaimed subject matter only and forms no part of the claimed design.

1 Claim, 9 Drawing Sheets

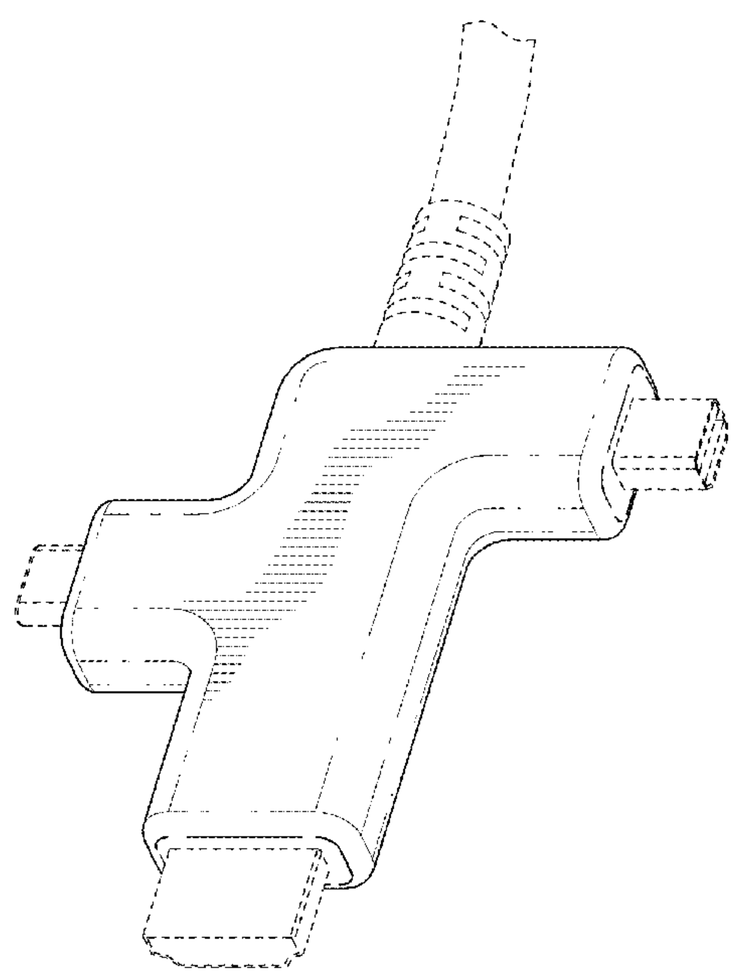

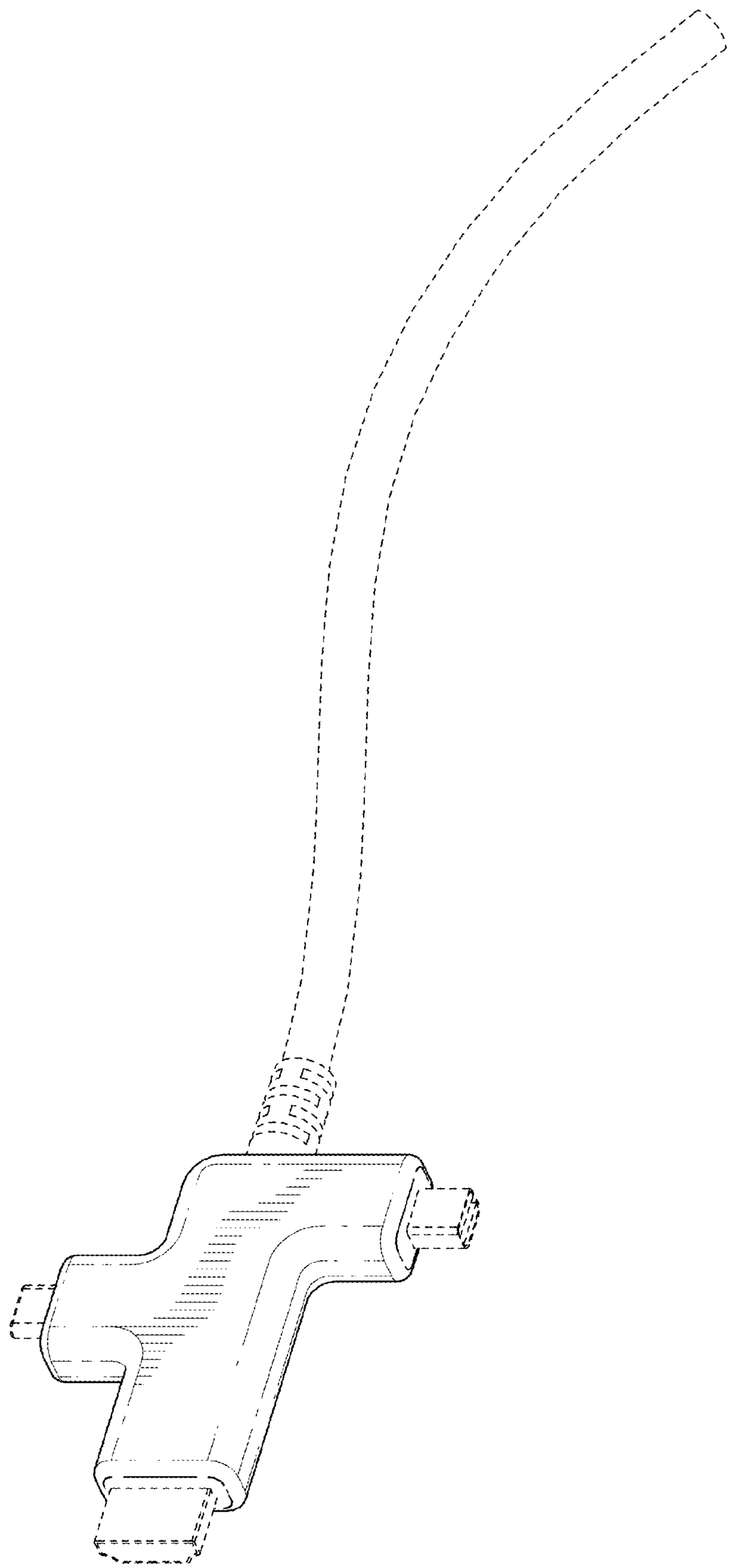

FIG. 1

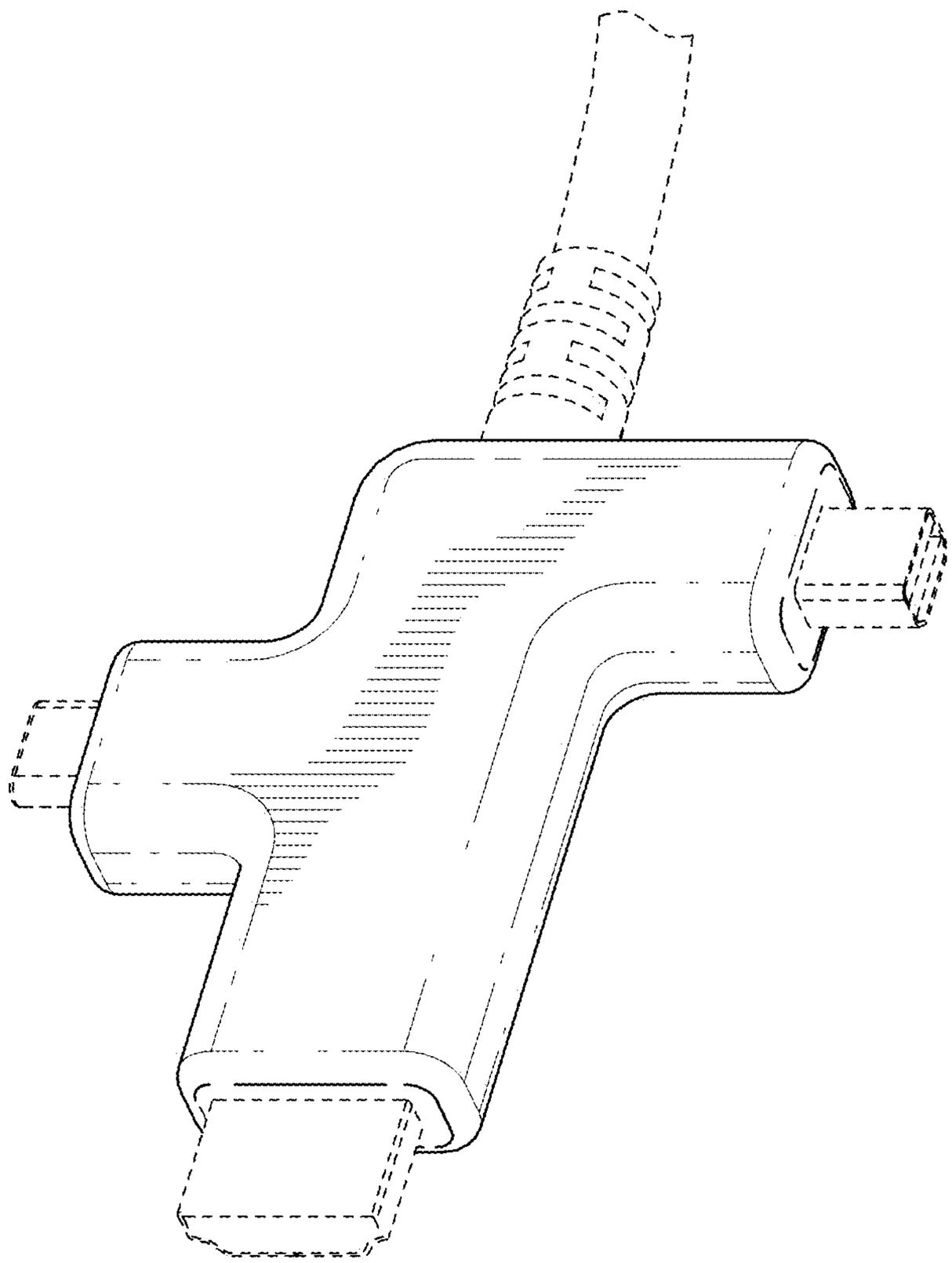

FIG.2

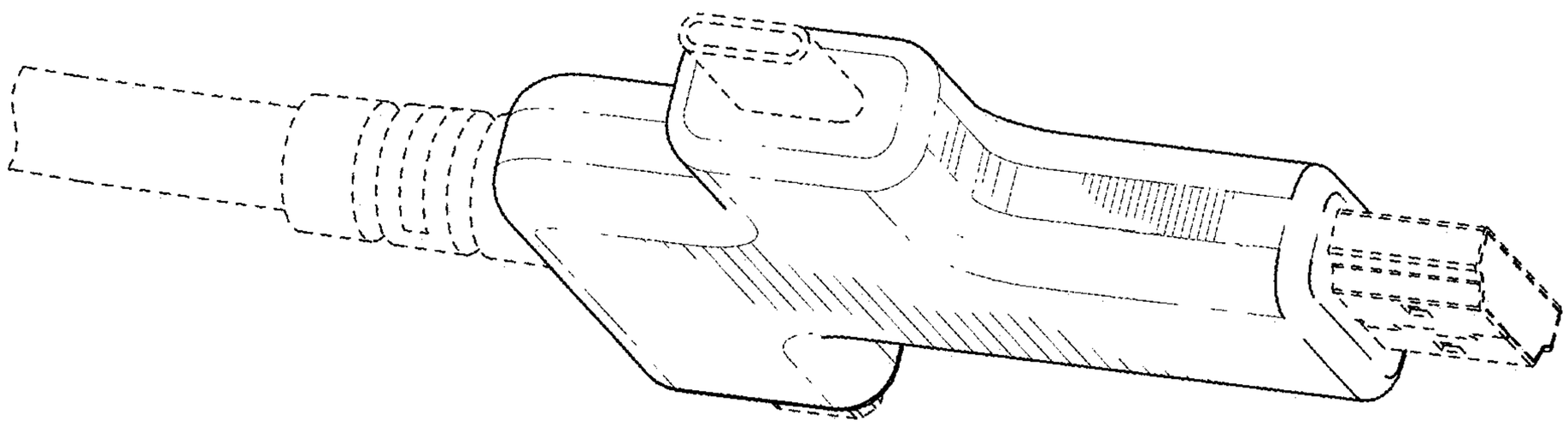

FIG.3

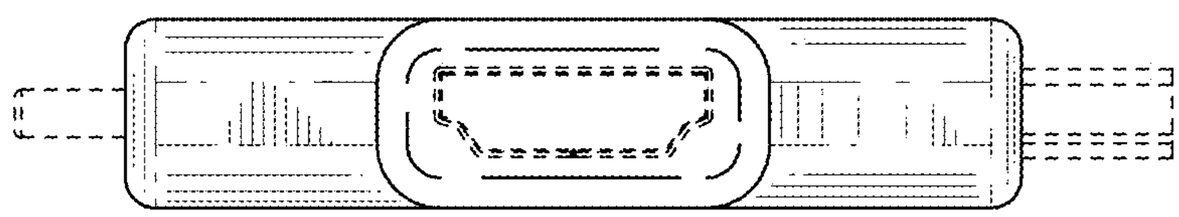

FIG.4

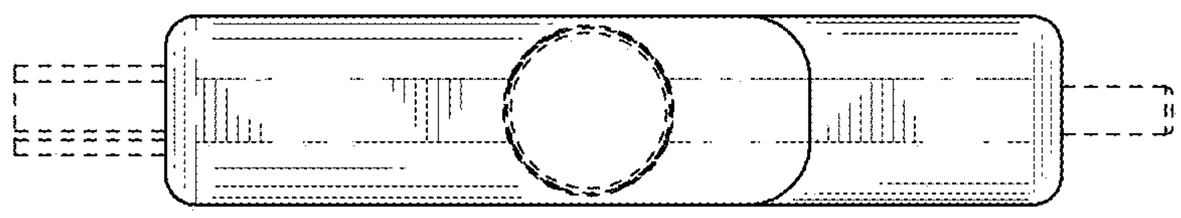

FIG.5

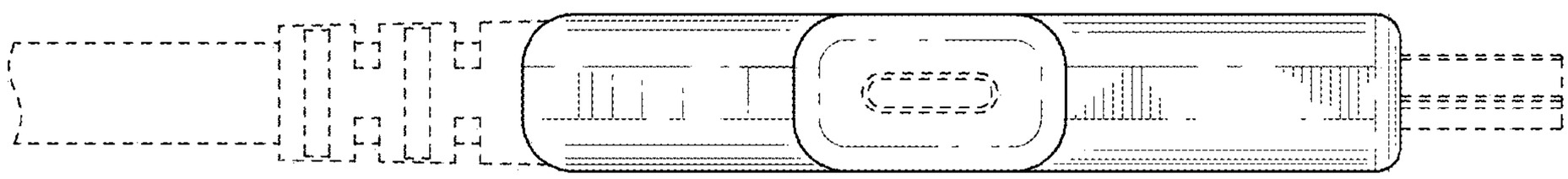

FIG.6

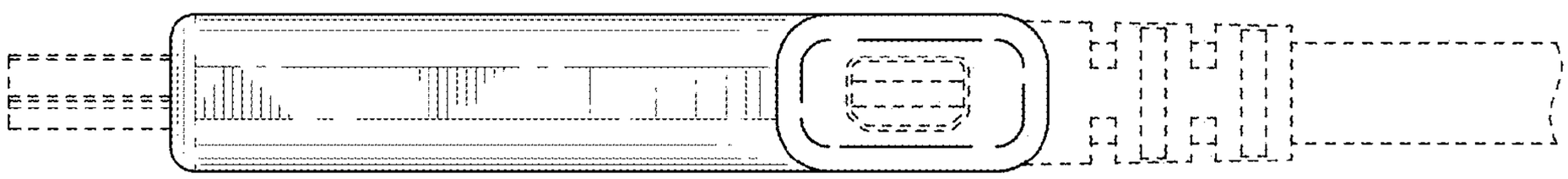

FIG. 7

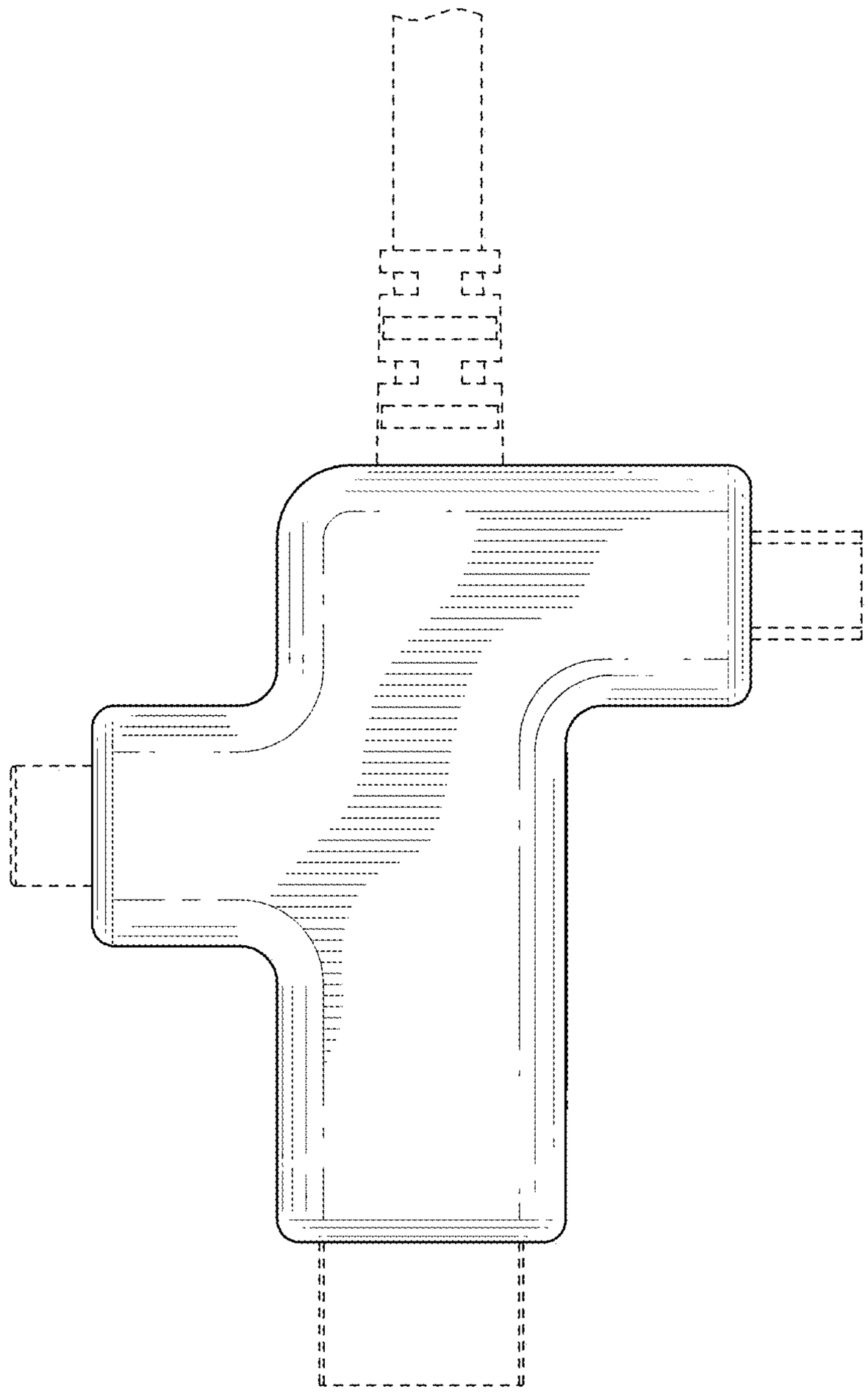

FIG.8

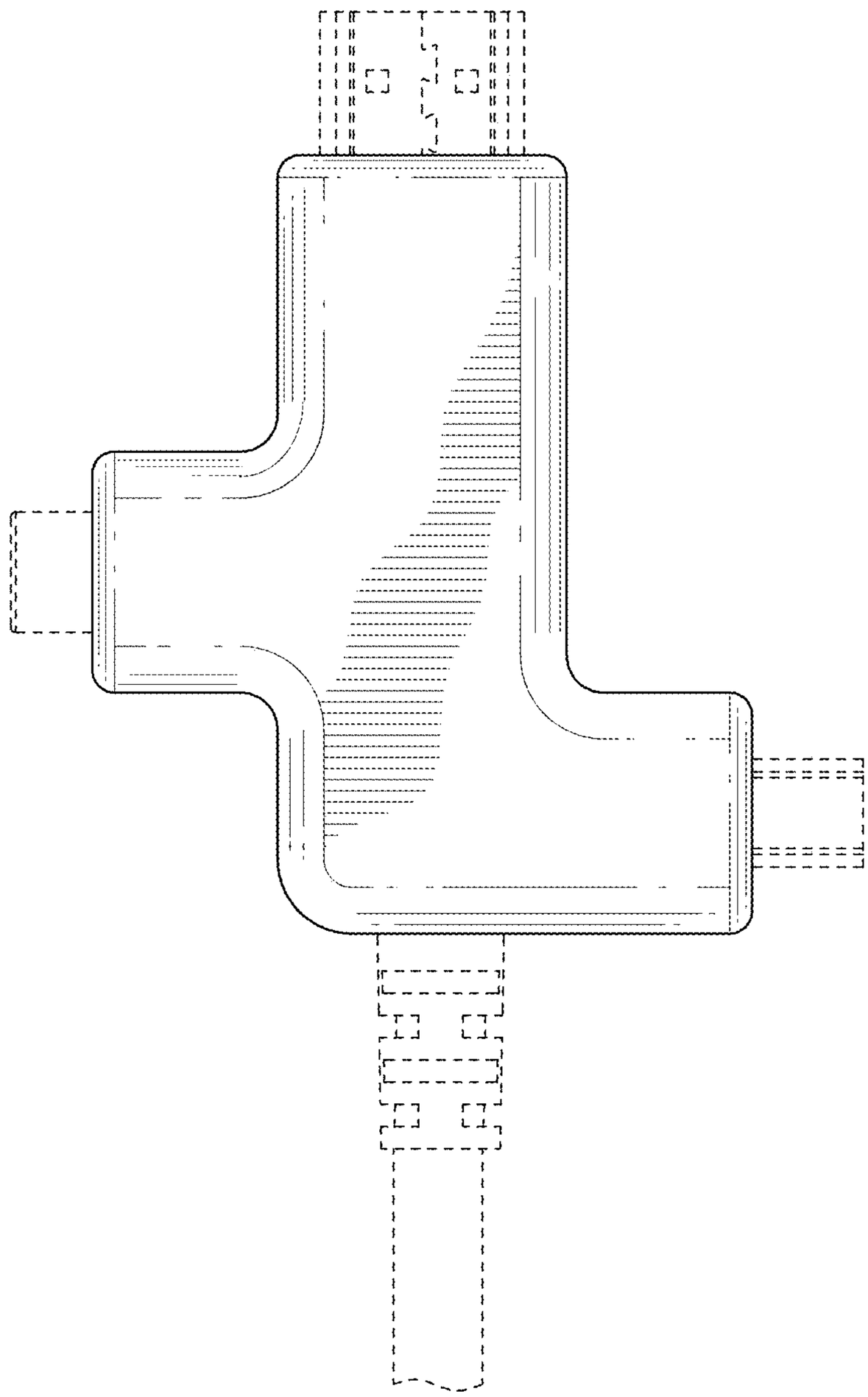

FIG.9