US00D889567S

# (12) United States Design Patent
**Comfort**

(10) **Patent No.: US D889,567 S**
(45) **Date of Patent: ** Jul. 7, 2020**

(54) **TRACK CONFIGURATION**

(71) Applicant: **Q-BA-MAZE Inc.**, Minneapolis, MN (US)

(72) Inventor: **Andrew Comfort**, Minneapolis, MN (US)

(73) Assignee: **Q-BA-MAZE Inc.**, Minneapolis, MN (US)

(**) Term: **15 Years**

(21) Appl. No.: **29/588,772**

(22) Filed: **Dec. 22, 2016**

(51) **LOC (12) Cl.** ..... **21-01**

(52) **U.S. Cl.**
USPC ..... **D21/565**; D21/564

(58) **Field of Classification Search**
USPC ..... D21/340, 456, 567, 568, 564–565, D21/817–819
CPC ..... A63H 29/08; A63H 18/00; A63H 33/009; A63F 7/36; A63F 7/28; A63F 7/24; A63F 7/34; A63F 9/24
See application file for complete search history.

(56) **References Cited**

U.S. PATENT DOCUMENTS

| | | | | |
|---|---|---|---|---|
| 1,334,954 | A | 3/1920 | Jancek | |
| 1,531,542 | A | 3/1925 | Cogshall | |
| 2,472,363 | A | 6/1949 | Blackinton | |
| 2,619,829 | A | 12/1952 | Tatum | |
| 2,662,336 | A | 12/1953 | Zalkind | |
| 2,729,914 | A * | 1/1956 | Cook | A63F 7/3622 446/168 |
| 2,886,909 | A | 5/1959 | Hesse et al. | |
| 2,998,673 | A | 9/1961 | Rhodes | |
| 3,028,704 | A | 4/1962 | Rumbaugh | |
| 3,034,254 | A | 5/1962 | Christensen | |
| 3,405,479 | A | 10/1968 | Paulson | |
| 3,466,044 | A | 9/1969 | Somerville | |
| 3,662,508 | A | 5/1972 | Slayden | |
| 3,696,549 | A | 10/1972 | Zilius | |
| 3,698,149 | A | 10/1972 | Baker et al. | |
| 3,752,476 | A | 8/1973 | Mahoney | |
| 3,782,729 | A | 1/1974 | Ernst | |
| 3,818,628 | A | 6/1974 | Ensmann et al. | |
| 3,837,648 | A | 9/1974 | Breslow | |

(Continued)

FOREIGN PATENT DOCUMENTS

| | | |
|---|---|---|
| CH | 519346 | 2/1972 |
| DE | 19938848 | 7/2000 |

(Continued)

OTHER PUBLICATIONS

https://www.alibaba.com/product-detail/55-Pieces-Wooden-Marble-Run-Game_448503046.html (Year: 2020).*

(Continued)

*Primary Examiner* — Manpreet S Matharu
*Assistant Examiner* — Keith J Wilson
(74) *Attorney, Agent, or Firm* — Padda Law Group

(57) **CLAIM**

The ornamental design of the track configuration, as shown.

**DESCRIPTION**

FIG. **1** is a perspective view of a track configuration;
FIG. **2** is a front side view thererof;
FIG. **3** is a back side view thereof;
FIG. **4** is a top side view thereof;
FIG. **5** is a bottom side view thereof;
FIG. **6** is a left side view thereof; and,
FIG. **7** is a right side view thereof.
The broken lines shown in the drawings illustrate environmental subject matter and form no part of the claimed design.

**1 Claim, 7 Drawing Sheets**

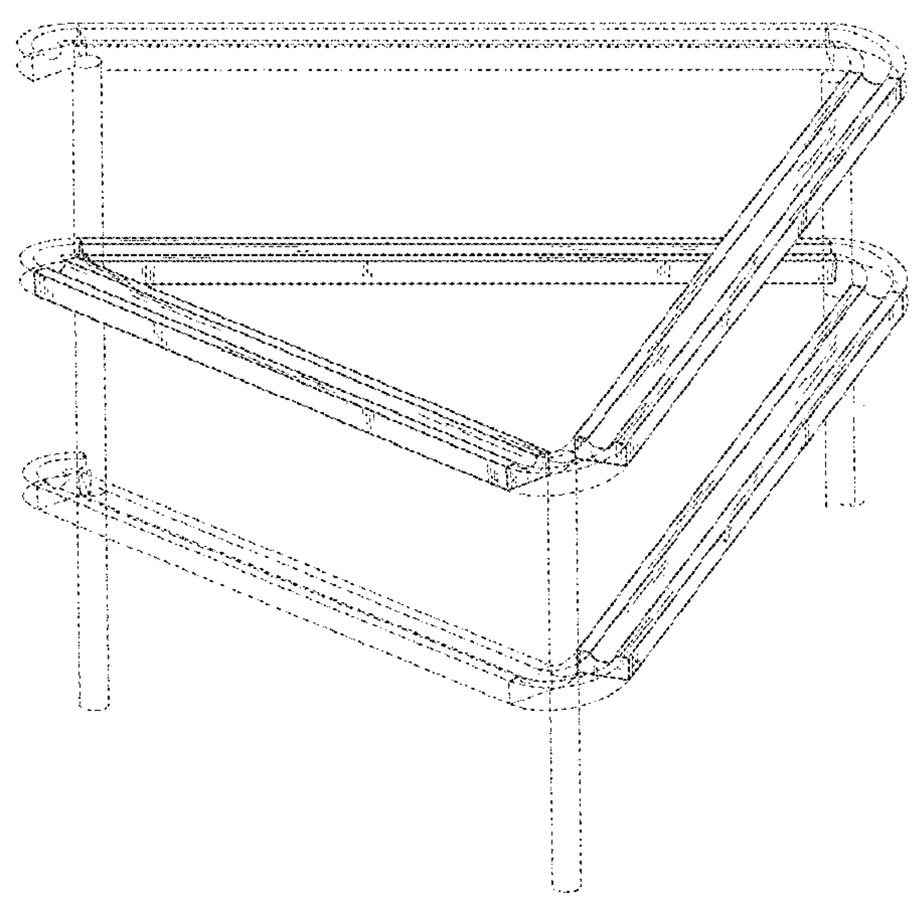

(56) **References Cited**

U.S. PATENT DOCUMENTS

| | | | | | |
|---|---|---|---|---|---|
| 3,946,516 | A | | 3/1976 | Wirth | |
| 3,994,076 | A | | 11/1976 | Bertman et al. | |
| 4,003,144 | A | | 1/1977 | Maddestra et al. | |
| 4,037,355 | A | * | 7/1977 | Street | A63F 7/3622 446/173 |
| D248,887 | S | * | 8/1978 | Tanaka | D21/564 |
| 4,274,221 | A | | 6/1981 | Boutet | |
| D260,412 | S | * | 8/1981 | Hirano | D21/564 |
| 4,378,116 | A | | 3/1983 | Rubik | |
| 4,405,131 | A | | 9/1983 | Horvath | |
| D271,120 | S | * | 10/1983 | Matsumoto | D21/564 |
| D277,205 | S | * | 1/1985 | Suzuki | D21/564 |
| 4,553,749 | A | * | 11/1985 | Bender | A63F 7/3622 273/459 |
| 4,557,701 | A | | 12/1985 | Giallombardo | |
| 4,602,908 | A | | 7/1986 | Kroeber | |
| 4,650,437 | A | | 3/1987 | Sitkus | |
| D289,666 | S | * | 5/1987 | Udagawa | D21/564 |
| D290,026 | S | | 5/1987 | Wichman | |
| D290,028 | S | | 5/1987 | Wichman | |
| D290,143 | S | | 6/1987 | Wichman | |
| D290,145 | S | * | 6/1987 | Wichman | D21/565 |
| 4,713,038 | A | * | 12/1987 | Wichman | A63F 7/02 446/168 |
| D294,044 | S | * | 2/1988 | Wichman | D21/565 |
| 4,808,140 | A | | 2/1989 | Clavet | |
| D300,644 | S | * | 4/1989 | Udagawa | D21/564 |
| D302,032 | S | * | 7/1989 | Kamikawa | D21/564 |
| 4,874,342 | A | | 10/1989 | Klitsner | |
| D305,044 | S | * | 12/1989 | Klitsner | D21/565 |
| D305,047 | S | * | 12/1989 | Klitsner | D21/565 |
| D305,443 | S | * | 1/1990 | Klitsner | D21/565 |
| D305,556 | S | * | 1/1990 | Lo | D21/564 |
| 4,903,451 | A | | 2/1990 | Gresswell | |
| 4,932,917 | A | * | 6/1990 | Klitsner | A63F 7/3622 446/168 |
| 4,942,700 | A | | 7/1990 | Hoberman | |
| 4,943,048 | A | * | 7/1990 | Hentges | A63G 21/00 182/49 |
| 4,964,833 | A | | 10/1990 | Suzuki | |
| 4,971,246 | A | | 11/1990 | Goudis | |
| 5,007,876 | A | * | 4/1991 | Klitsner | A63F 7/3622 446/168 |
| 5,024,031 | A | | 6/1991 | Hoberman | |
| 5,039,109 | A | | 8/1991 | Mahoney et al. | |
| 5,044,639 | A | | 9/1991 | Egging et al. | |
| 5,061,218 | A | | 10/1991 | Garage et al. | |
| 5,267,863 | A | | 12/1993 | Simmons, Jr. | |
| 5,273,276 | A | | 12/1993 | Warren | |
| 5,292,126 | A | | 3/1994 | Hanley | |
| 5,312,285 | A | * | 5/1994 | Rieber | A63F 7/3622 273/109 |
| 5,314,367 | A | | 5/1994 | Schaefer | |
| 5,332,216 | A | | 7/1994 | Whipple | |
| D350,784 | S | | 9/1994 | Nielsen et al. | |
| 5,344,143 | A | * | 9/1994 | Yule | A63F 7/3622 273/118 R |
| 5,386,994 | A | | 2/1995 | Baranowski | |
| 5,427,574 | A | * | 6/1995 | Donnelly-Weide | A63G 21/00 104/69 |
| 5,451,177 | A | | 9/1995 | Gilman | |
| 5,494,292 | A | | 2/1996 | Mileti | |
| 5,525,089 | A | | 6/1996 | Heinz | |
| 5,554,062 | A | | 9/1996 | Goldsen | |
| 5,709,581 | A | | 1/1998 | Rothbarth et al. | |
| 5,826,394 | A | | 10/1998 | Barton et al. | |
| D403,028 | S | | 12/1998 | Barton, Jr. et al. | |
| 5,924,907 | A | | 7/1999 | Tobin | |
| 5,928,052 | A | | 7/1999 | Buscher | |
| 5,944,575 | A | | 8/1999 | Tolnay | |
| 5,947,870 | A | | 9/1999 | Hall et al. | |
| D422,652 | S | * | 4/2000 | Watanabe | D21/564 |
| 6,056,620 | A | | 5/2000 | Tobin | |
| 6,074,269 | A | * | 6/2000 | Rothbarth | A63F 7/3622 238/10 R |
| D428,912 | S | | 8/2000 | Bolle | |
| D430,231 | S | | 8/2000 | Sorensen et al. | |
| D436,383 | S | * | 1/2001 | Chesler | D21/404 |
| D437,365 | S | * | 2/2001 | Flicek | D21/456 |
| D438,279 | S | * | 2/2001 | Robertson | D21/818 |
| 6,248,026 | B1 | | 6/2001 | Wanchena | |
| 6,250,634 | B1 | | 6/2001 | Strain et al. | |
| 6,273,778 | B1 | | 8/2001 | Kyster | |
| 6,293,800 | B1 | | 9/2001 | Robertson | |
| 6,340,323 | B1 | | 1/2002 | Glynn | |
| D456,463 | S | | 4/2002 | Sorensen | |
| D457,198 | S | * | 5/2002 | Yamazaki | D21/456 |
| 6,427,926 | B1 | | 8/2002 | Lai | |
| D465,247 | S | | 11/2002 | Sorensen | |
| 6,536,763 | B1 | * | 3/2003 | Braun | A63F 7/3622 273/118 R |
| 6,568,679 | B1 | | 5/2003 | Sommer | |
| 6,588,168 | B2 | | 7/2003 | Walters | |
| 6,616,499 | B1 | | 9/2003 | Sorensen | |
| 6,645,033 | B1 | | 11/2003 | Thomsen | |
| 6,733,403 | B2 | | 5/2004 | Courtright | |
| D492,736 | S | | 7/2004 | Kato | |
| D495,022 | S | * | 8/2004 | Auberger | D21/818 |
| D558,850 | S | * | 1/2008 | Banta | D21/818 |
| 7,524,246 | B2 | | 4/2009 | Briggs et al. | |
| 7,775,850 | B2 | * | 8/2010 | Todokoro | A63H 23/10 446/156 |
| D641,807 | S | * | 7/2011 | Hornsby | D21/564 |
| 8,074,945 | B2 | * | 12/2011 | Schoenau | F16L 5/14 248/316.6 |
| 8,540,545 | B2 | | 9/2013 | Lelcht | |
| D699,805 | S | * | 2/2014 | Green | D21/818 |
| D712,491 | S | * | 9/2014 | Hornsby | D21/564 |
| D718,823 | S | * | 12/2014 | Cunningham | D21/565 |
| 9,345,979 | B2 | * | 5/2016 | Matthes | A63H 18/06 |
| 9,409,097 | B2 | * | 8/2016 | Comfort | A63H 18/02 |
| 9,421,473 | B2 | * | 8/2016 | Ostendorff | A63H 18/023 |
| 9,452,366 | B2 | * | 9/2016 | Schmid | A63H 18/06 |
| 9,457,284 | B2 | * | 10/2016 | Ostendorff | A63H 18/02 |
| 9,925,471 | B2 | * | 3/2018 | Flores | A63F 7/3622 |
| 2007/0060012 | A1 | * | 3/2007 | Comfort | A63F 7/3622 446/168 |
| 2011/0070803 | A1 | | 3/2011 | Hoffman et al. | |

FOREIGN PATENT DOCUMENTS

| | | |
|---|---|---|
| FR | 2646096 | 10/1990 |
| FR | 2763514 | 11/1998 |
| GB | 867244 | 5/1961 |
| JP | 59500549 | 4/1984 |
| JP | 61103199 | 7/1986 |
| JP | 62061279 | 4/1987 |
| JP | 3053277 | 5/1991 |
| JP | 1094681 | 4/1998 |
| JP | 4619930 | 1/2011 |
| WO | 9426372 | 11/1994 |
| WO | 9835880 | 8/1998 |

OTHER PUBLICATIONS

https://q-ba-maze.typepad.com/content/page/2/ (Year: 2008).*
http://www.nikitiki.co.jp/toymakers/13/images/cuboro elements all.gif, Mar. 9, 2006, 2 pgs.
http://www.nikitiki.co.jp/toymakers/16/menu/html, Sep. 14, 2006, 1 pg.
http://www.taurustoy.com/ The Block and Marble Maze Construction System, Block-N-Roll™, Sep. 14, 2006, 2 pgs.
http://www.sommercube.com/index.html, Symmetry Under Transformation, Sommer Cube®, Mar. 9, 2006, 4 pgs.
http://www.klimba.ch/d/produkte/maxi.php, Klimba-die klingende Kugelbahn, Mar. 20, 2006, 4 pgs.
http://www.klimba.ch/klimba2005/suissetoy05/pages/127-2729.html, Klimba-die klingende Kugelbahn, Sep. 14, 2006, 2 pgs.
http://www.quercetti.com/construction.htm, Quercetti Intelligent Toys—Marble Run, Mar. 11, 2005, 2 pgs.

(56) **References Cited**

OTHER PUBLICATIONS

http://www.quercetti.com/new-2001/marblespiral.htm, Quercetti Intelligent Toys—Marble Run #6558, Mar. 11, 2005, 1 pg.
http://www.quercetti.com/new-2001/marblevortex.htm, Quercetti Intelligent Toys—Marble Run #6538, Mar. 11, 2005, 1 pg.
http://www.quercetti.com/new-2001/supermarble.htm, Quercetti Intelligent Toys—Marble Run #6588, Mar. 11, 2005, 1 pg.
http://www.quercetti.com/new-2001/marbletransparent.htm, Quercetti Intelligent Toys—Marble Run #6546, Mar. 11, 2005, 1 pg.
http://www.quercetti.com/marbles/supermarble.htm, Quercetti Intelligent Toys—Marble Run, Mar. 11, 2005, 2 pgs.
http://www.quercetti.com/new-2001/sky6440.htm, Quercetti Intelligent Toys—Skyrail™ #6440, Mar. 11, 2005, 1 pg.
http://www.quercetti.com/new-2001/skysuspension.htm, Quercetti Intelligent Toys—Suspension #6450, Mar. 11, 2005, 2 pgs.
http://www.quercetti.com/new-2001/skybase.htm, Quercetti Intelligent Toys—Roller Coaster #6430, Mar. 11, 2005, 2 pgs.
http://www.quercetti.com/new-2001/skyroller.htm, Quercetti Intelligent Toys—Roller Coaster #6435, Mar. 11, 2005, 2 pgs.
http://www.quercetti.com/new-2001/crazyrun.htm, Quercetti Intelligent Toys—Crazyrun Magnetic #6410, Mar. 11, 2005, 1 pg.
http://www.galttoys.com/ind_products.php?id=A0555K, GALT Marble Run, Mar. 11, 2005, 1 pg.
http://www.galttoys.com/ind_products.php?id=A0560E, Galt Super Marble Run, Mar. 11, 2005, 1 pg.
http://www.galttoys.com/ind_products.php?id=A0512, Galt Marble Racer-120, Mar. 11, 2005, 1 pg.
http://www.frigits.com, Frigits, Mar. 11, 2005, 2 pgs.
http://www.educationaltoys.co.uk/acatalog/ET_Online_Catalogue_Marble_Runs_18html Mar. 11, 2006, 4 pgs.
http://www.scalino.de/site-eur/produkte/mk-gt-d.htm, Glockenturn, Art, Nr. 641, Mar. 11, 2005, 1 pg.
http://www.scalino.de/site-eur/produkte/gk-st0-d.htm, Stufe 0, Art. Nr. 600, Mar. 11, 2005, 1 pg.
http://www.scalino.de/site-eur/produkte/gk-st1-d.htm, Stufe 1, Art. Nr. 601, Mar. 11, 2005, 1 pg.
http://www.scalino.de/site-eur/produkte/gk-st2-d.htm, Stufe 2, Art. Nr. 602, Mar. 11, 2005, 1 pg.
http://www.scalino.de/site-eur/produkte/gk-st3-d.htm, Stufe 3, Art. Nr. 603, Mar. 11, 2005, 1 pg.
http://www.haba.de/Kugelbahn.kba.0html?&tx_habaproducts_pi1[showUid]=601&tx_hab . . . , Haba: Erfinder fur Kinder, Mar. 11, 2005, 2 pgs.
http://www.haba.de/Kugelbahn.kba.0html?&tx_habaproducts_pi1[showUid]=588&tx_hab . . . , Haba: Erfinder fur Kinder, Mar. 11, 2005, 2 pgs.
http://www.elc.co.uk/sku-107346/pl-Puzzles/p2-30/Product.do, Marble Madness, Mar. 11, 2005, 1 pg.
http://www.mastermindtoys.com/stor/product.asp?produc%5Fcode=47711&cat=0&brand . . . , Block-N-Roll Deluxe Set, Mar. 11, 2005, 2 pgs.
http://cuburo.ch, Cuboro, The marble track for a lifetime, Swiss made, mod. dep., 1986-2005, 10 pgs.
International Search Report and Written Opinion for related PCT Application PCT/US2013/050151, dated Oct. 9, 2013, 10 pgs.

* cited by examiner

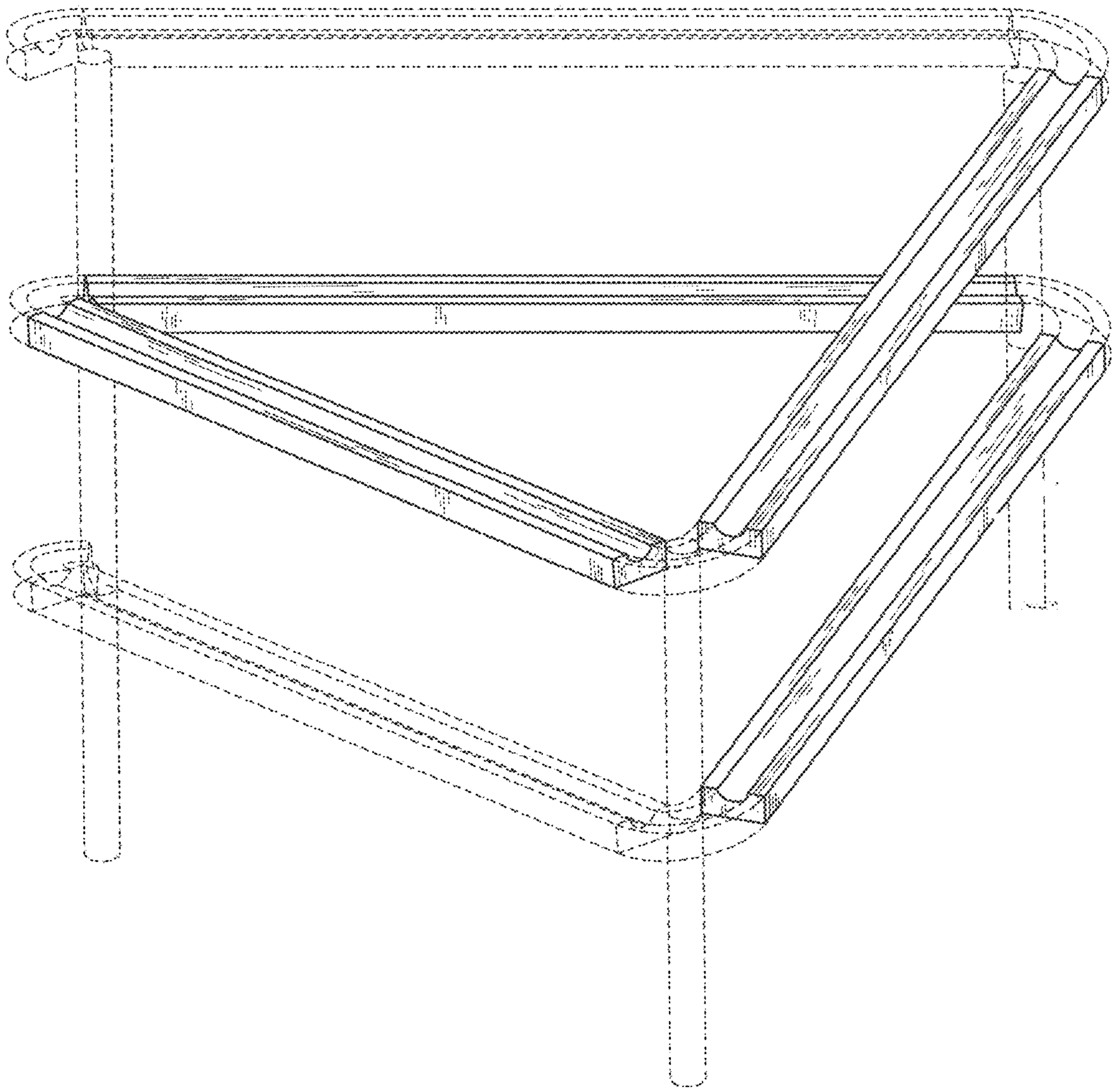

FIG. 1

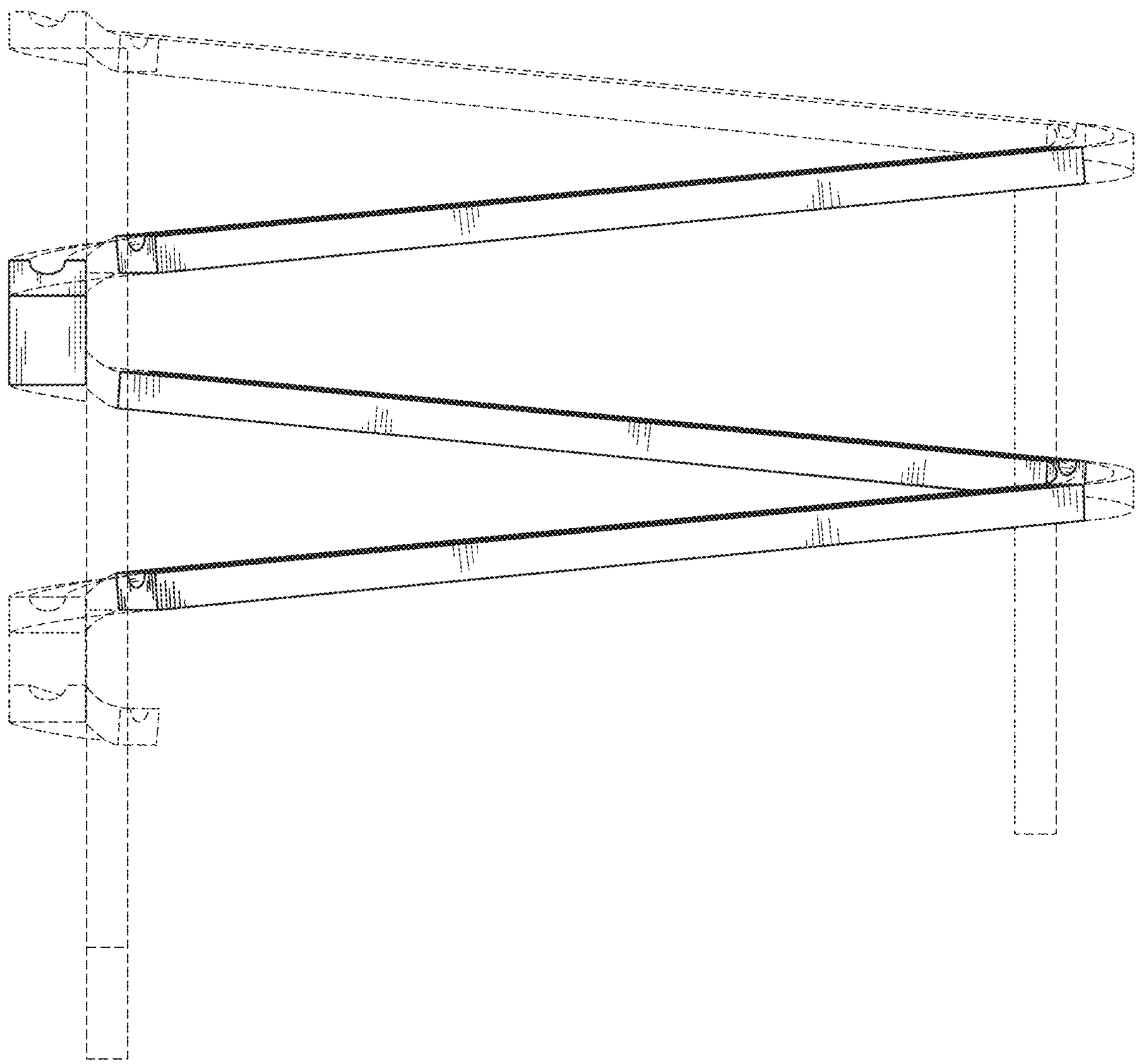

FIG. 2

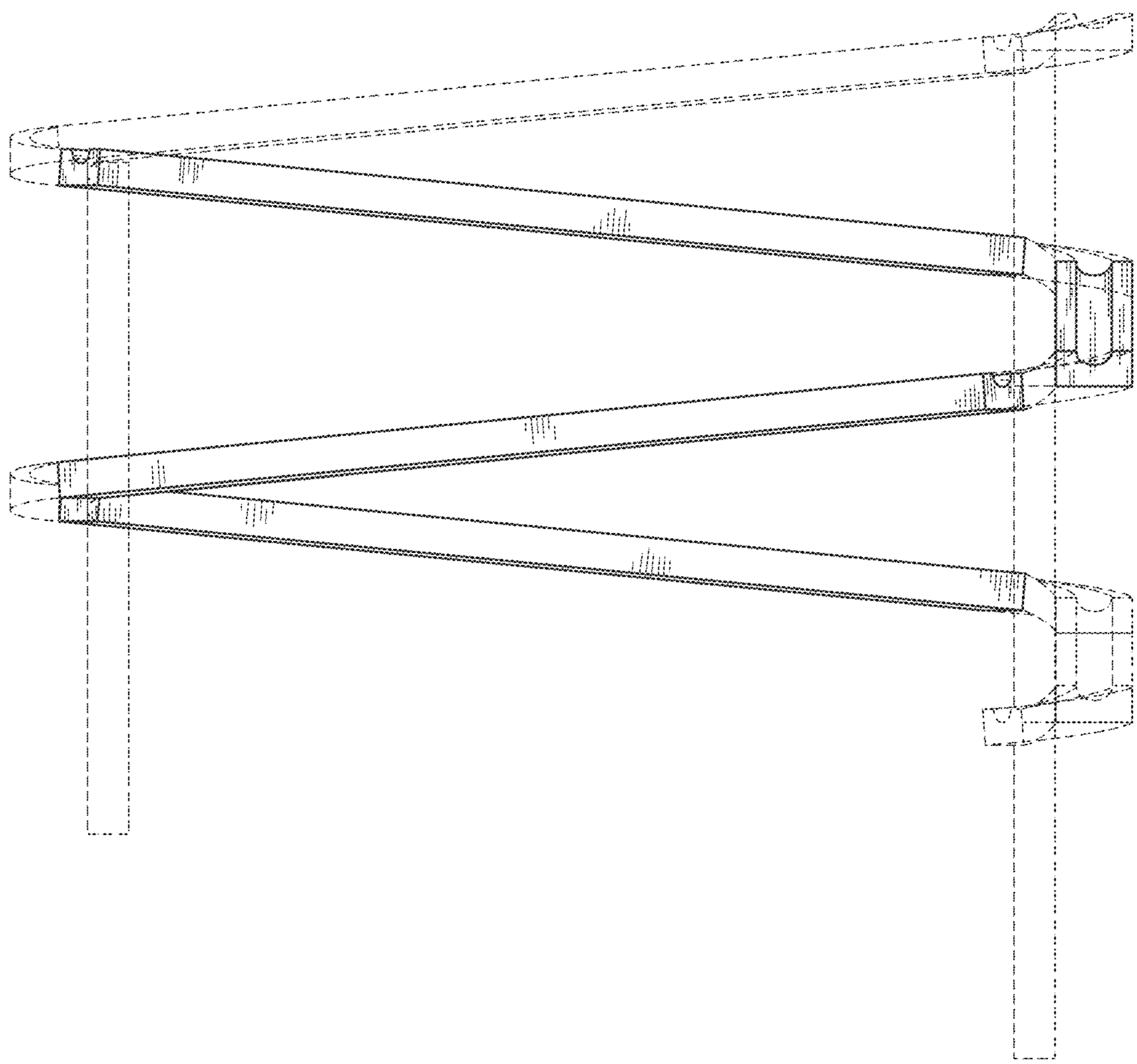

FIG. 3

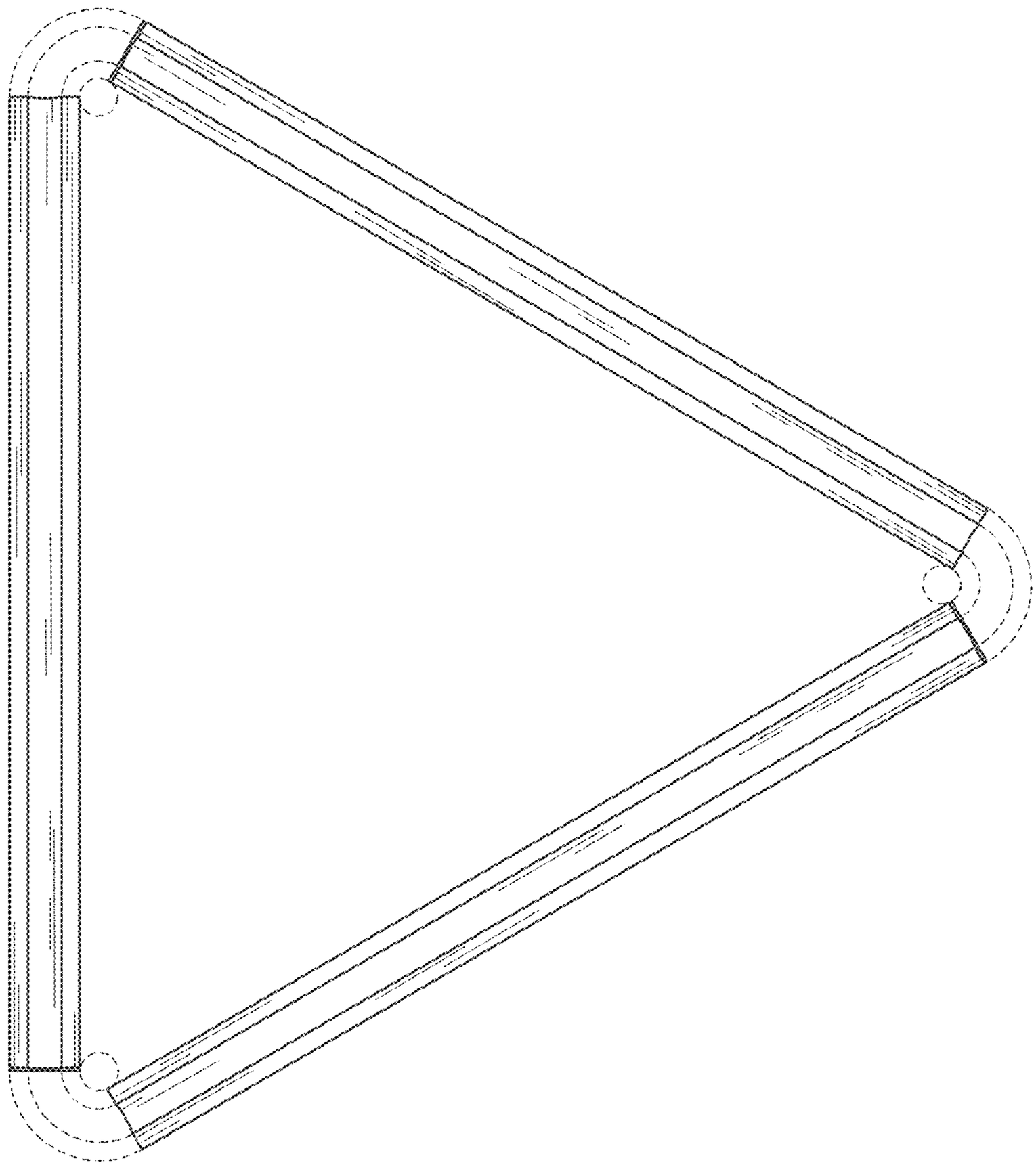

FIG. 4

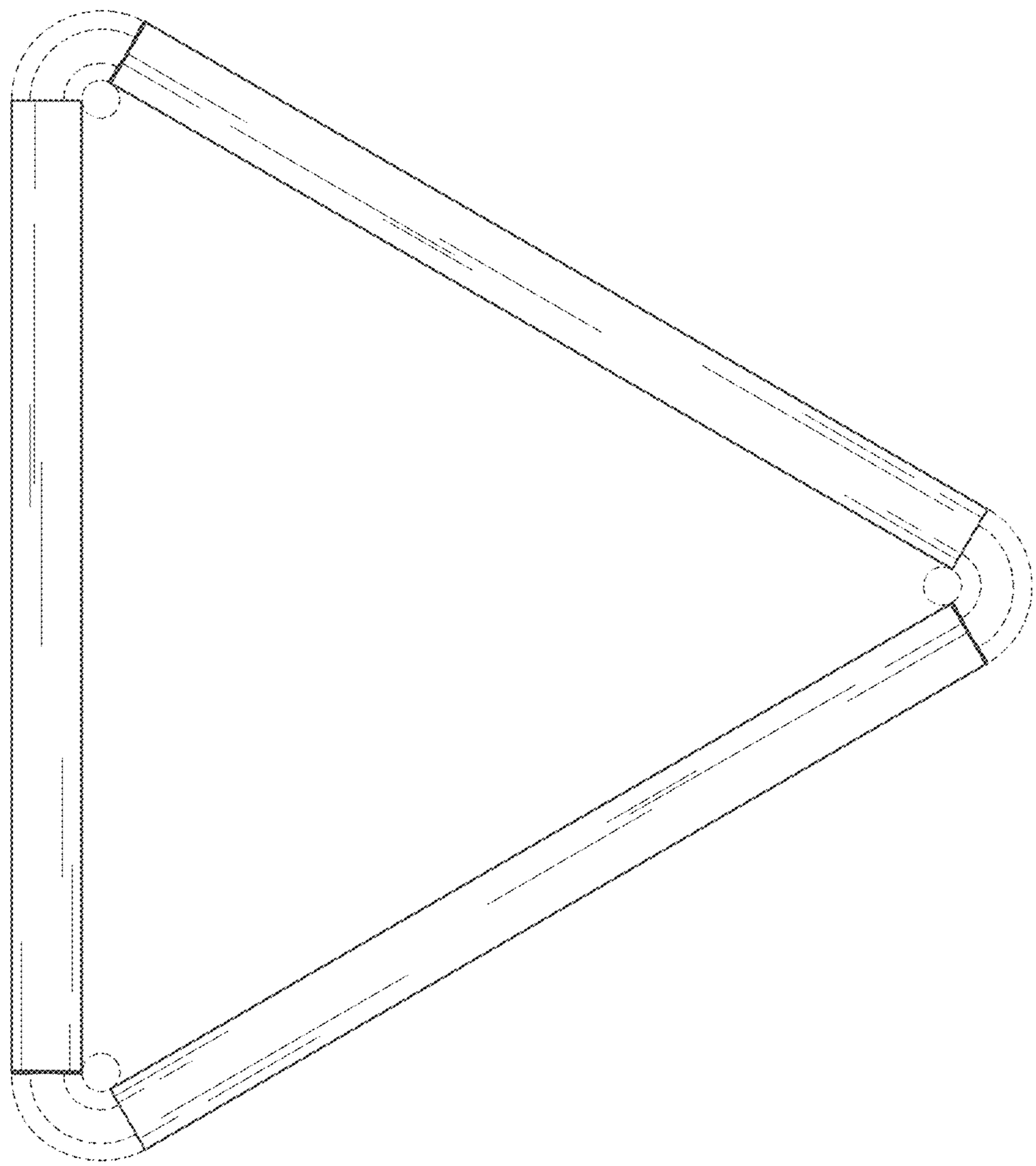

FIG. 5

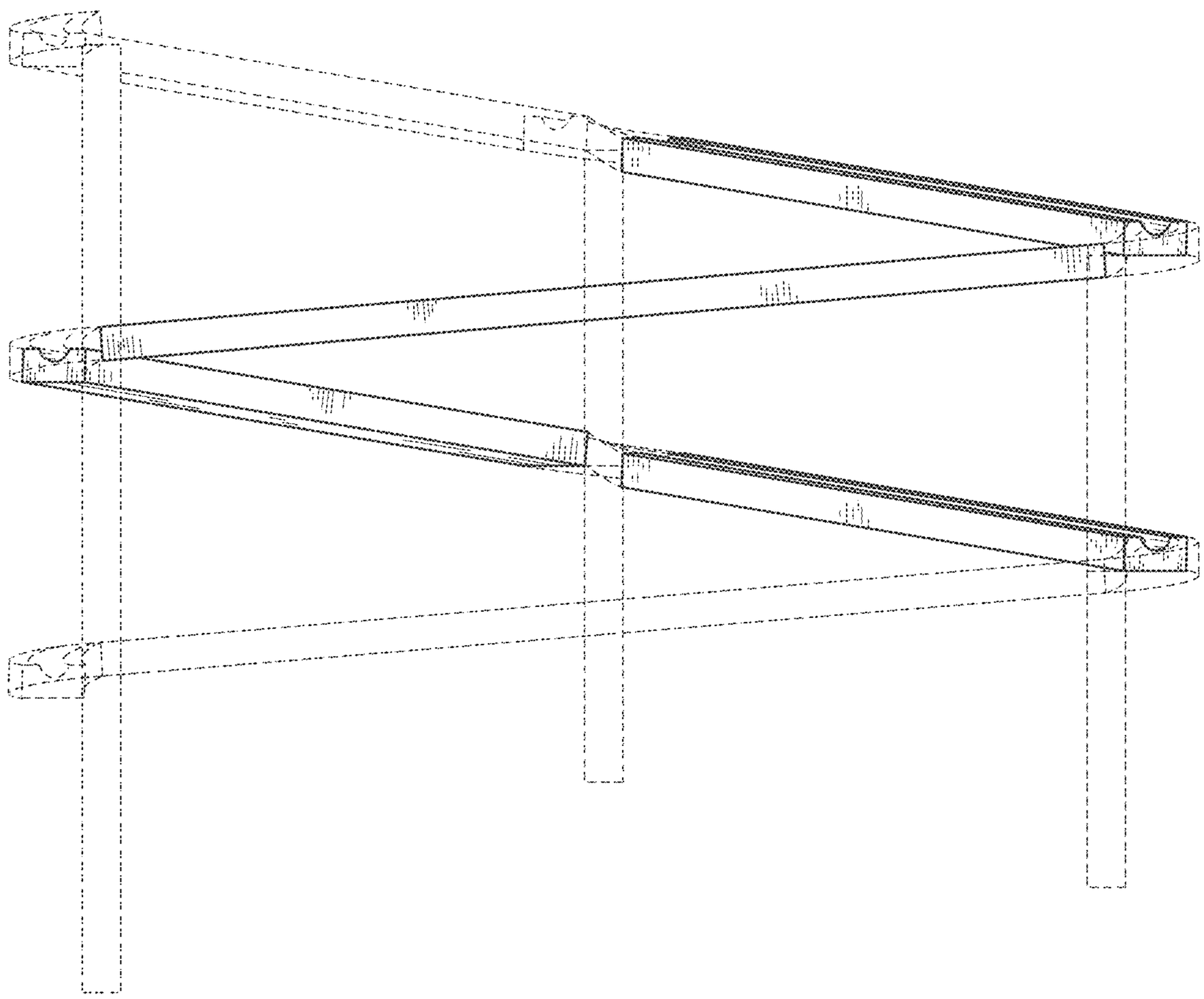

FIG. 6

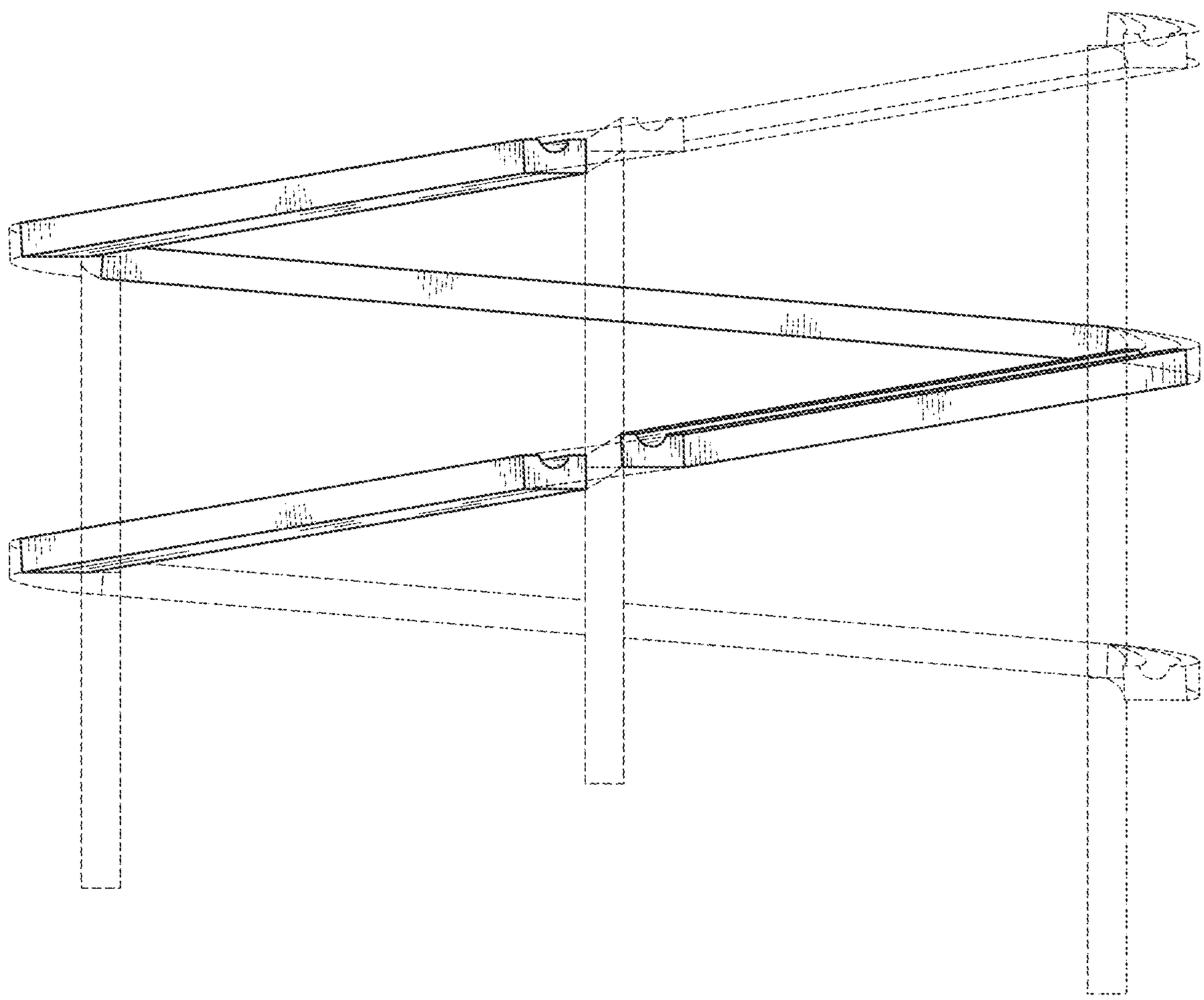

FIG. 7