US00D888896S

(12) United States Design Patent
Ozburn

(10) Patent No.: US D888,896 S
(45) Date of Patent: ** Jun. 30, 2020

(54) **HYDRANT BONNET SLEEVE**

(71) Applicant: **Albert Glenn Ozburn**, Oxford, GA (US)

(72) Inventor: **Albert Glenn Ozburn**, Oxford, GA (US)

(**) Term: **15 Years**

(21) Appl. No.: **29/717,997**

(22) Filed: **Dec. 20, 2019**

Related U.S. Application Data

(62) Division of application No. 29/657,496, filed on Jul. 23, 2018, now Pat. No. Des. 873,967.

(51) **LOC (12) Cl.** **23-01**

(52) **U.S. Cl.**
USPC **D23/249**

(58) **Field of Classification Search**
USPC D23/233, 234–237, 241–249, 269, 260, D23/254, 259, 262; 123/188.2, 41.69, 123/41.41, 41.76, 41.77, 41.85, 188.1; 137/217, 15.18, 559, 219, 625.34, 514, 137/493.4, 272
CPC F16K 27/006; F16K 25/005; F16K 27/12
See application file for complete search history.

(56) **References Cited**

U.S. PATENT DOCUMENTS

4,398,556	A	8/1983	Pereira et al.	
4,727,900	A	3/1988	Dooling et al.	
D347,467	S *	5/1994	Medvick	D23/262
D379,493	S *	5/1997	Woods	D23/269
D382,943	S *	8/1997	Doughty	D23/259
D386,246	S *	11/1997	Sonden	D23/262
6,536,462	B1	3/2003	Laugen	
D473,934	S *	4/2003	Singtoroj	D23/254
6,935,360	B2	8/2005	Knappmiller	
D554,974	S	11/2007	Huang	
D572,348	S *	7/2008	Arosio	D15/5
D599,894	S *	9/2009	Price	D23/262
D613,828	S	4/2010	Kinchen	
D679,171	S	4/2013	Sedwick	
8,657,021	B1	2/2014	Preta et al.	
D700,682	S	3/2014	Bayyouk et al.	
D748,228	S	1/2016	Bayyouk et al.	
D787,029	S	5/2017	Bayyouk et al.	
D856,498	S *	8/2019	Bayyouk	D23/269
D873,967	S *	1/2020	Ozburn	D23/249
2010/0295672	A1	11/2010	Hyland et al.	

(Continued)

OTHER PUBLICATIONS

Interview Summary corresponding to U.S. Appl. No. 16/042,420 dated Feb. 5, 2020.

(Continued)

Primary Examiner — Gino Colan
(74) *Attorney, Agent, or Firm* — Jenkins, Wilson, Taylor & Hunt, P.A.

(57) **CLAIM**

The ornamental design for a hydrant bonnet sleeve, as shown and described.

DESCRIPTION

FIG. **1** is a top perspective view of the hydrant bonnet sleeve showing my new design;
FIG. **2** is a bottom perspective view of FIG. **1**;
FIG. **3** is a top plan view of FIG. **1**;
FIG. **4** is a bottom plan view of FIG. **1**;
FIG. **5** is a side elevation view of FIG. **1**; and,
FIG. **6** is a side elevation view of FIG. **1**, shown in an assembled condition on a fire hydrant.
The broken lines shown in the figures are included for the purpose of illustrating environment and form no part of the claimed design.

1 Claim, 6 Drawing Sheets

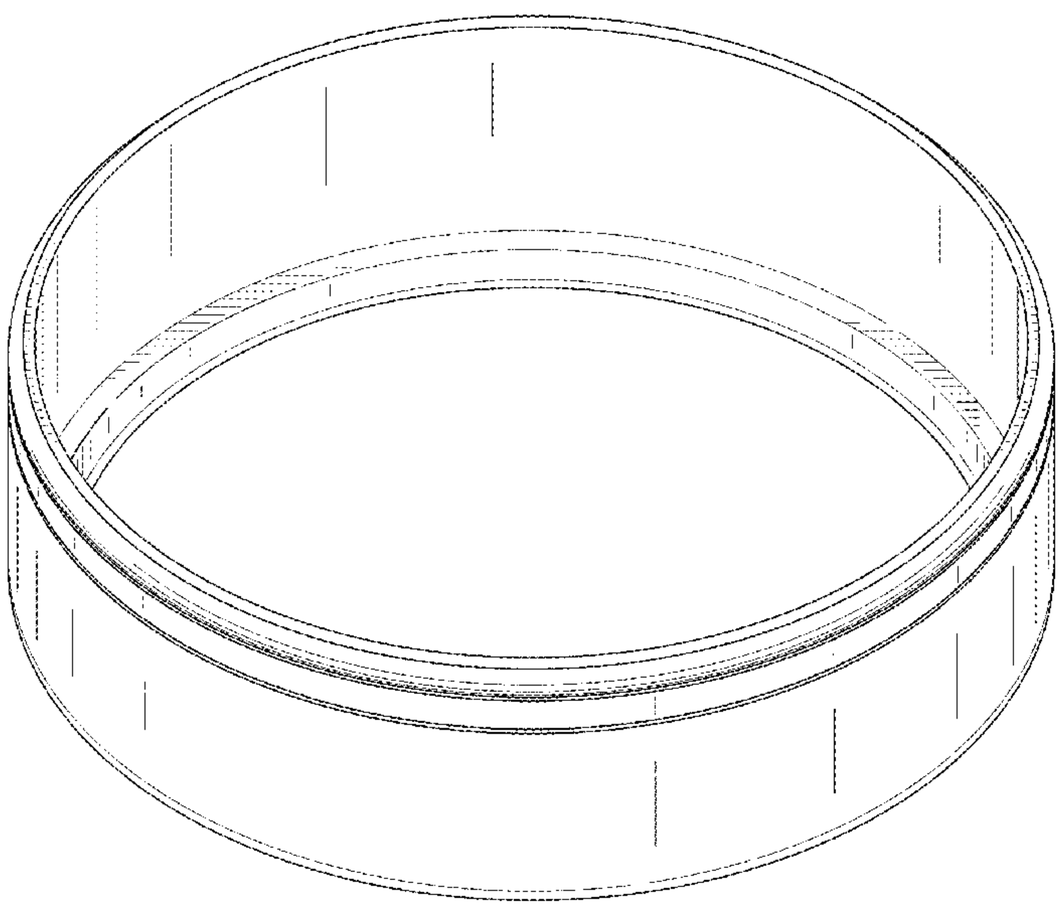

(56) **References Cited**

U.S. PATENT DOCUMENTS

2012/0261002	A1	10/2012	Sampson
2019/0024352	A1	1/2019	Ozburn

OTHER PUBLICATIONS

Office Action corresponding to U.S. Appl. No. 16/042,420 dated Aug. 15, 2019.
Notice of Allowance corresponding to U.S. Appl. No. 29/657,496 dated Sep. 20, 2019.
Notice of Allowability corresponding to U.S. Appl. No. 29/657,496 dated Dec. 11, 2019.

* cited by examiner

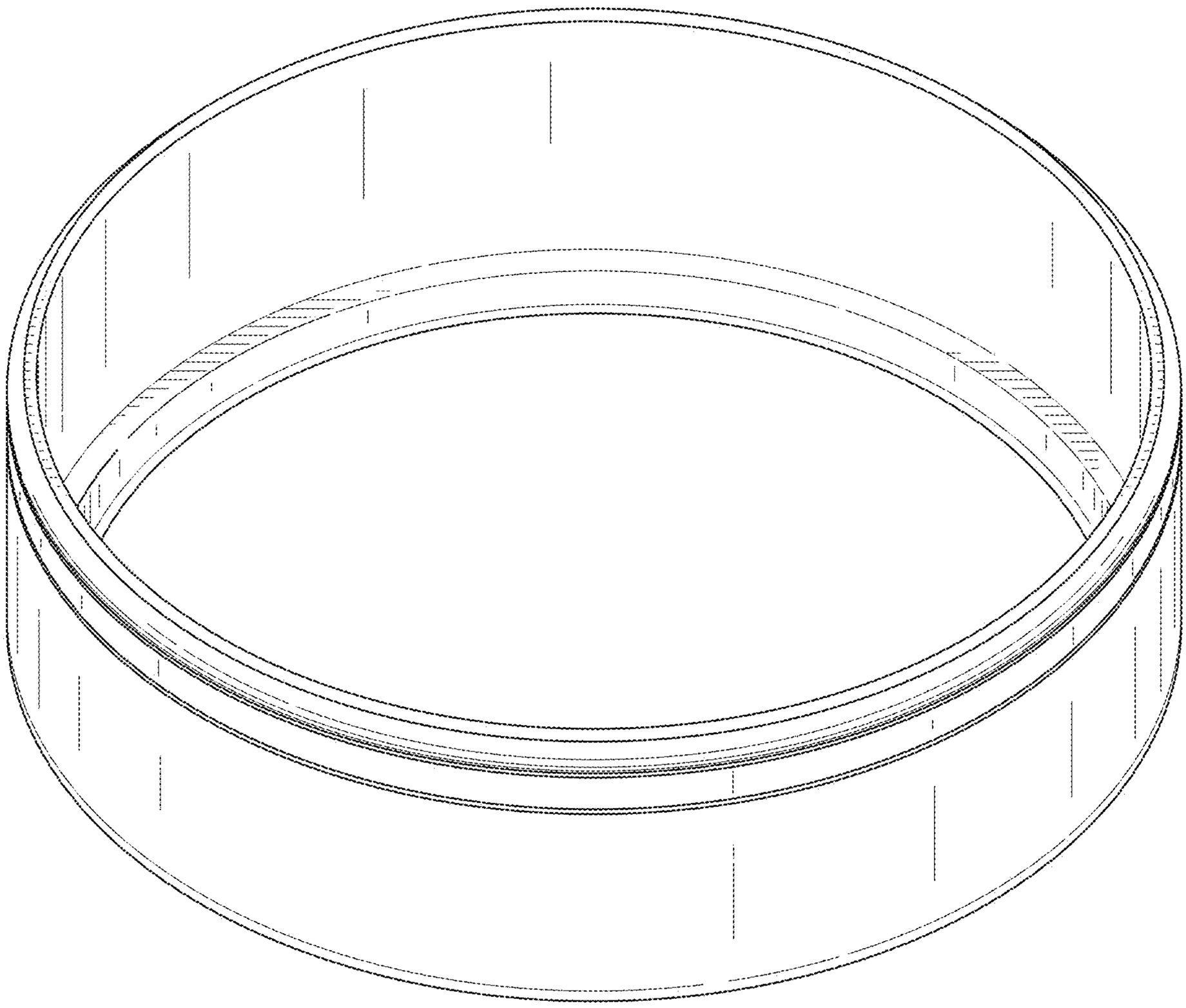

FIG. 1

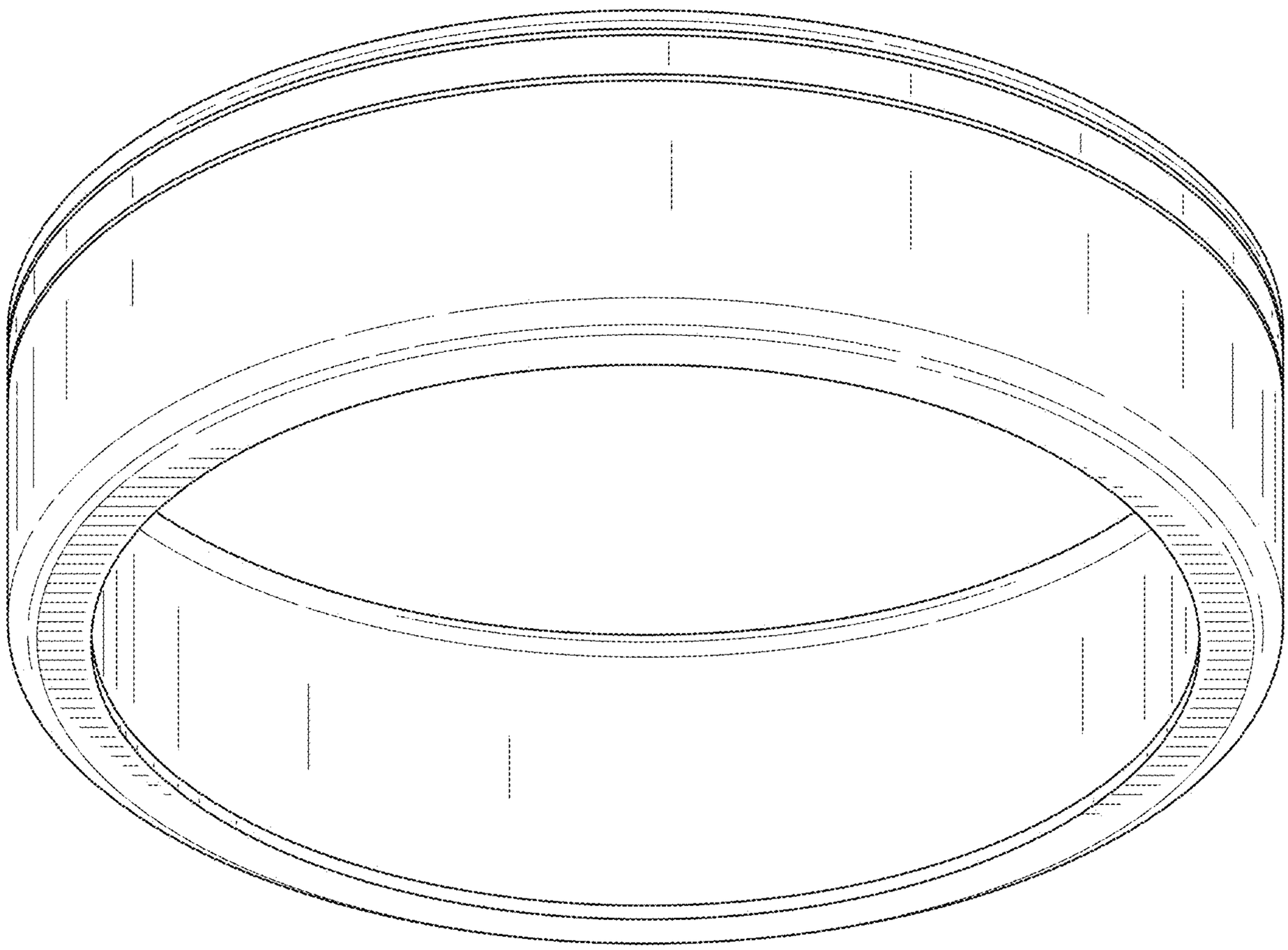

FIG. 2

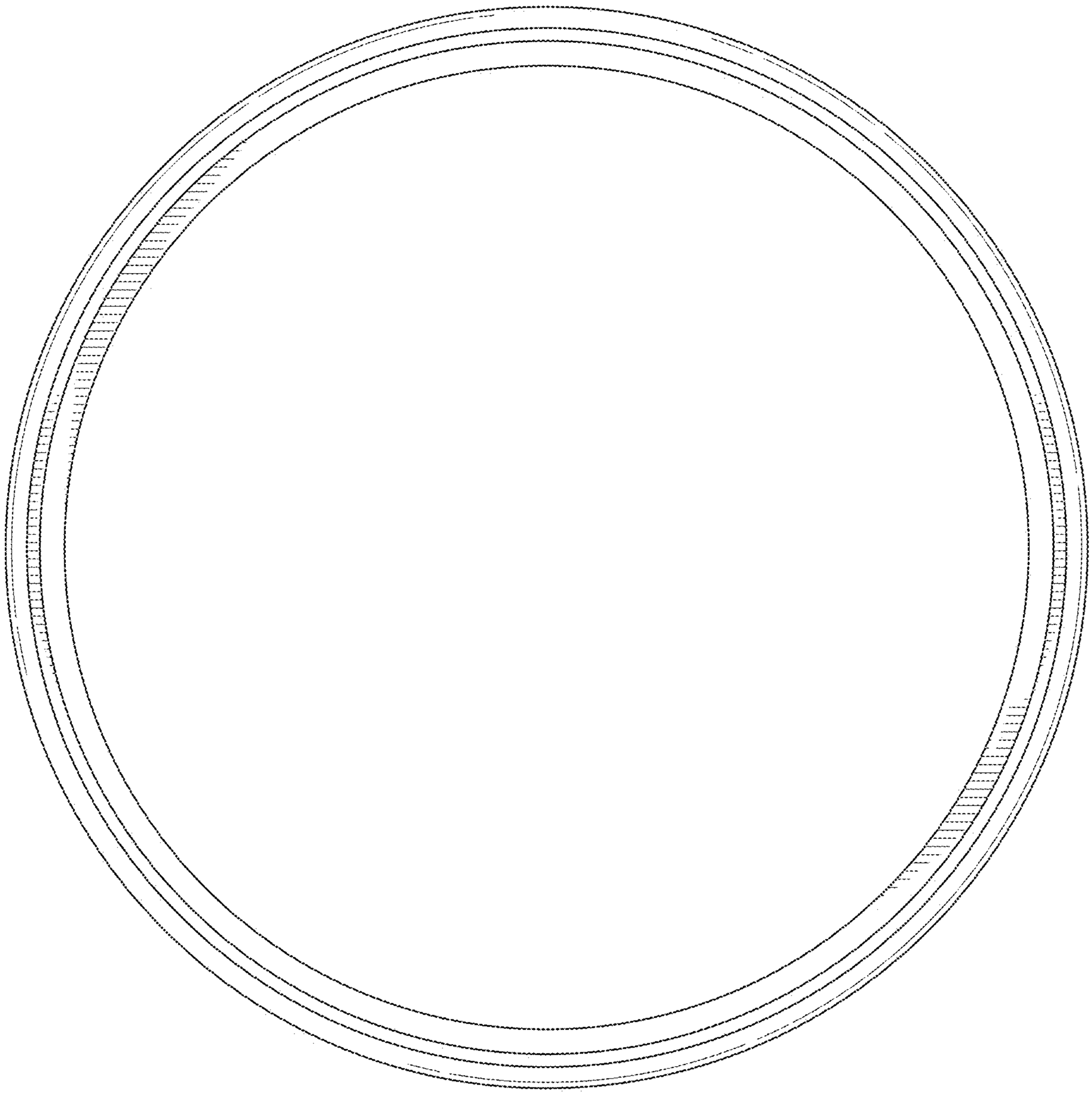

FIG. 3

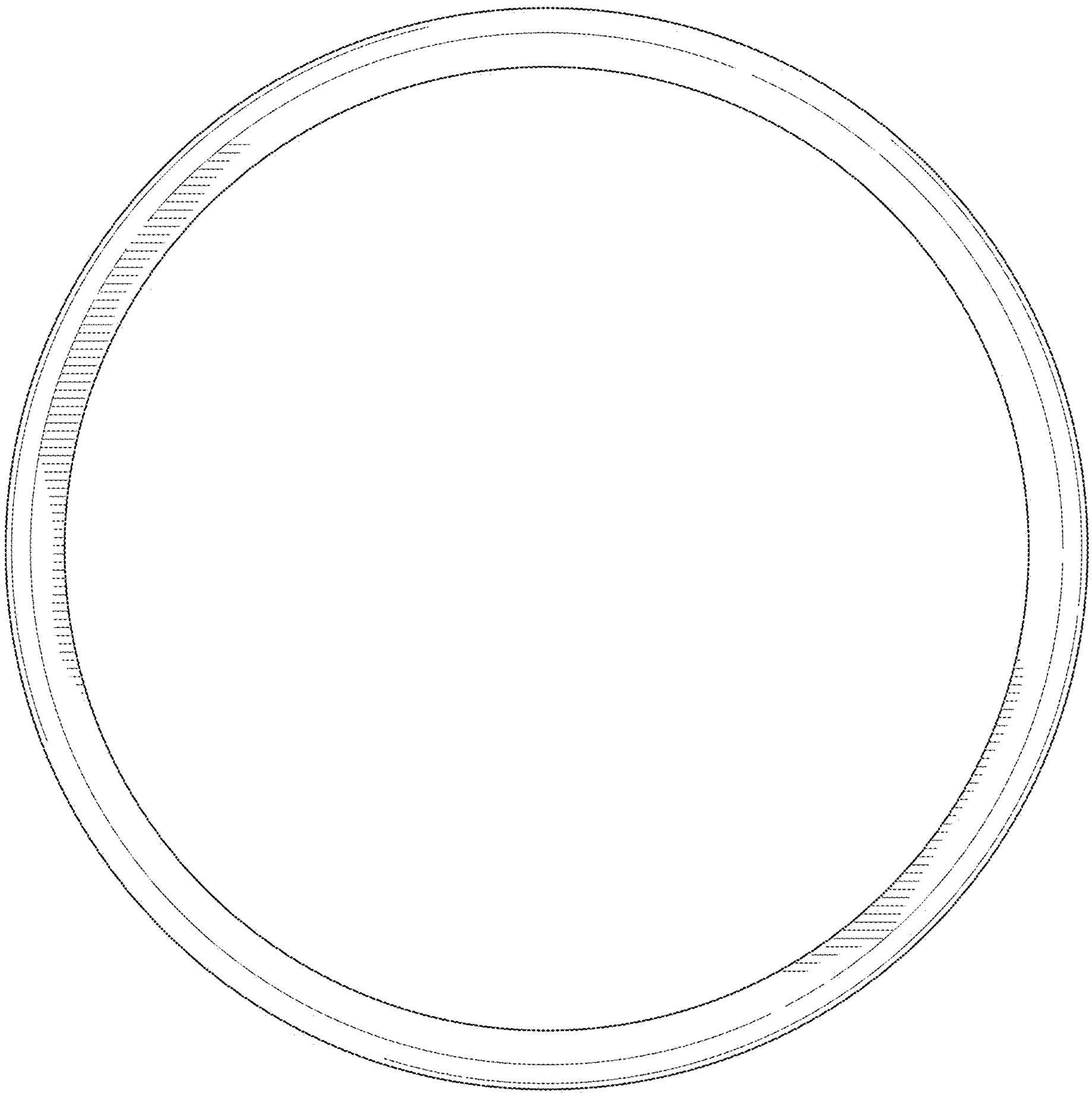

FIG. 4

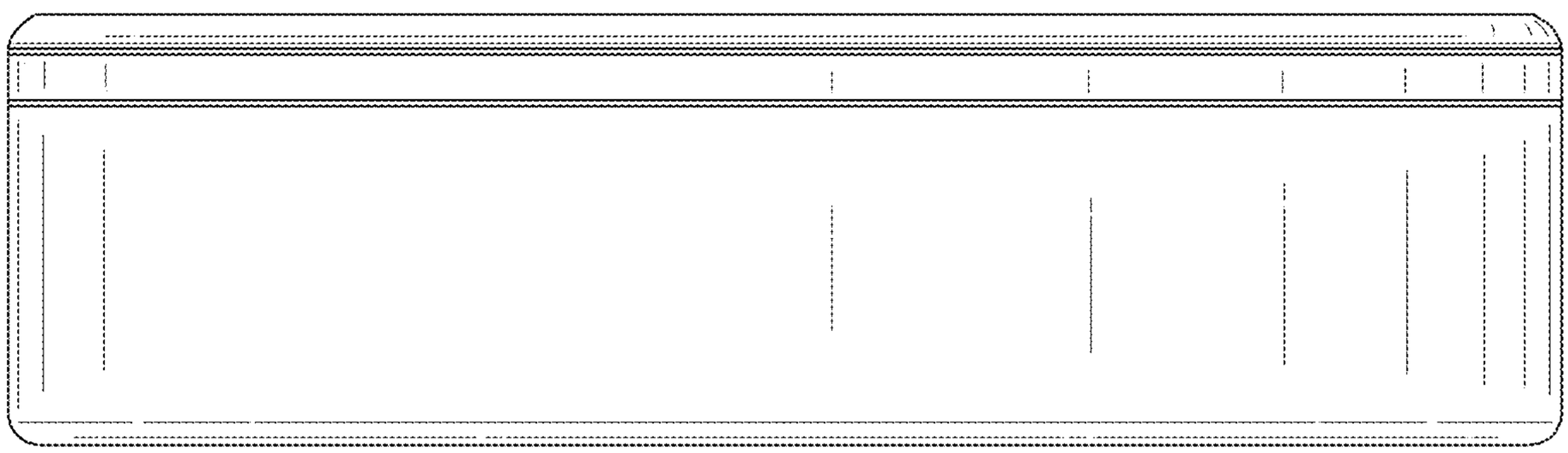

FIG. 5

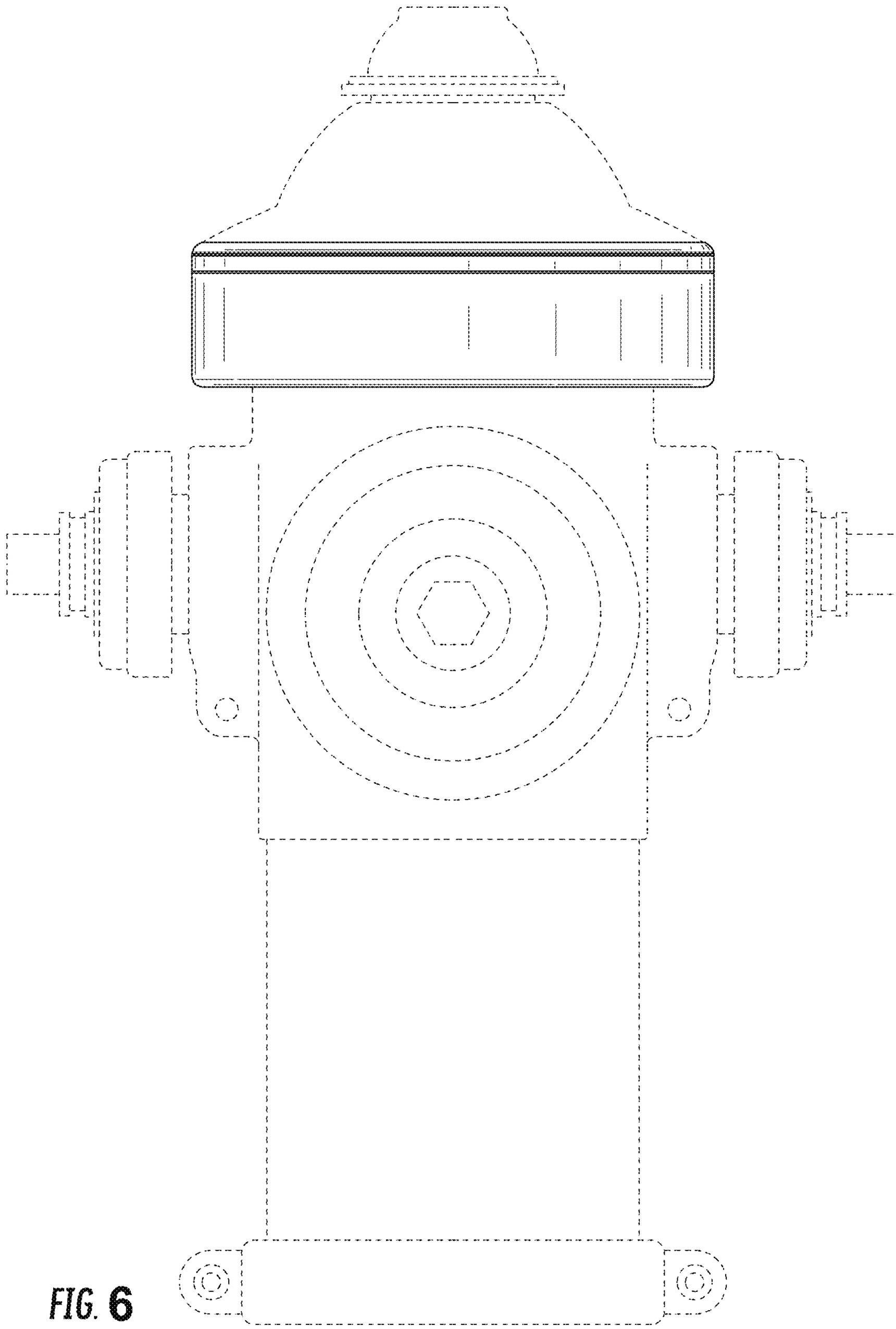

FIG. 6