US00D888662S

(12) United States Design Patent

Cramer et al.

(10) Patent No.: US D888,662 S
(45) Date of Patent: ** Jun. 30, 2020

(54) **CHARGER**

(71) Applicant: **SIVANTOS PTE. LTD.**, Singapore (SG)

(72) Inventors: **Harald Cramer**, Uhingen (DE); **Vincent Hasenmayer**, Stuttgart (DE); **Lit Song Ding**, Singapore (SG); **Vinay Joshi**, Singapore (SG); **Anand Ganapathy**, Singapore (SG); **Zainal Abidin Mohd Yahya**, Singapore (SG)

(73) Assignee: **Sivantos Pte. Ltd.**, Singapore (SG)

(**) Term: **15 Years**

(21) Appl. No.: **29/706,498**

(22) Filed: **Sep. 20, 2019**

Related U.S. Application Data

(62) Division of application No. 35/505,912, filed on Oct. 9, 2018 (U.S. filing date under 35 U.S.C. 384), and having an international filing date of Oct. 9, 2018.

(30) **Foreign Application Priority Data**

Apr. 12, 2018 (EM) 005230984-0002

(51) **LOC (12) Cl.** **13-02**

(52) **U.S. Cl.**
USPC **D13/108**

(58) **Field of Classification Search**
USPC D13/107–110, 118–119, 184; D14/251, D14/253, 432, 434
CPC Y02E 60/12; Y02T 90/14; Y02T 90/122; Y02T 90/128; Y02T 90/163; H02J 7/025; H02J 7/0042; H02J 7/0044; H02J 7/0045; H02J 7/0003; H01F 38/14; H01R 13/6675; H01M 2/1022; H01M 2/1055; H01M 10/44; H01M 10/46; H01M 10/425; B60L 11/182
See application file for complete search history.

(56) **References Cited**

U.S. PATENT DOCUMENTS

D521,927	S		5/2006	Franck	D13/108
D603,840	S	*	11/2009	Lee	D14/217
D613,903	S		4/2010	Wu	D27/189
D613,904	S		4/2010	Wu	D27/189
D656,092	S		3/2012	Nomi	D13/107
D656,093	S		3/2012	Nomi	D13/107
D656,094	S	*	3/2012	Wu	D13/108
D671,677	S	*	11/2012	Wu	D27/189
D671,678	S		11/2012	Wu	D27/189
D677,000	S		2/2013	Liu	D27/189
D677,001	S		2/2013	Liu	D27/189
D683,898	S		6/2013	Liu	D13/108
D683,899	S		6/2013	Liu	D13/108
D688,418	S		8/2013	Liu	D13/108
D691,372	S		10/2013	Chun	D3/294
D706,976	S	*	6/2014	Wu	D27/189
D723,733	S	*	3/2015	Liu	D27/189

(Continued)

Primary Examiner — Nathaniel D. Buckner
(74) *Attorney, Agent, or Firm* — Laurence A. Greenberg; Werner H. Stemer; Ralph E. Locher

(57) **CLAIM**

The ornamental design for a charger, as shown and described.

DESCRIPTION

FIG. **1** is a front perspective view of the charger showing our new invention;
FIG. **2** is a front elevation view thereof;
FIG. **3** is a rear elevation view thereof;
FIG. **4** is a left side elevation view thereof;
FIG. **5** is a right side elevation view thereof;
FIG. **6** is a top plan view thereof; and,
FIG. **7** is a bottom plan view thereof.

1 Claim, 7 Drawing Sheets

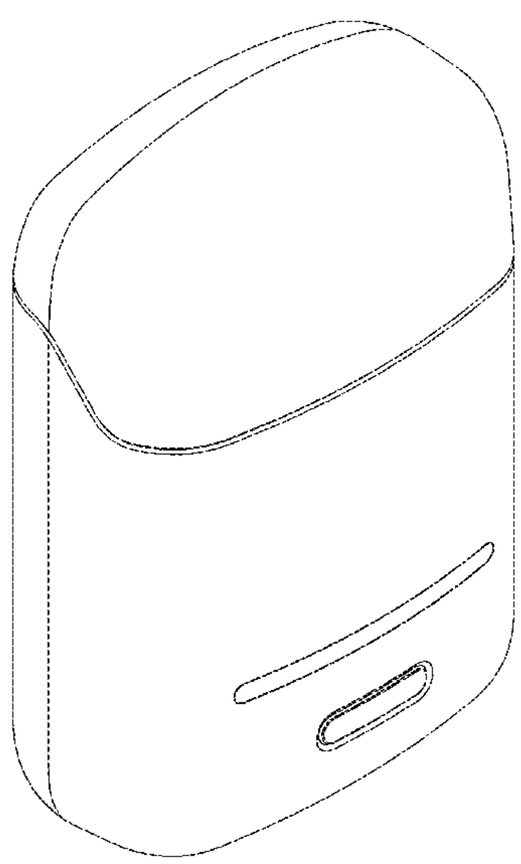

(56) **References Cited**

U.S. PATENT DOCUMENTS

D723,736	S	*	3/2015	Liu	D27/189
D723,737	S	*	3/2015	Liu	D27/189
D736,456	S	*	8/2015	Liu	D27/189
D772,572	S		11/2016	Palmborg	D3/201
D789,884	S		6/2017	Bourgeois	D13/107
D790,335	S		6/2017	Honings	D9/424
D790,455	S	*	6/2017	McGarry	D13/107
D791,077	S		7/2017	Tsou	D13/108
9,829,953	B2		11/2017	Reade	H02J 7/0042
D806,648	S		1/2018	Beedham	D13/107
D820,783	S		6/2018	Gelder	D13/107
D821,970	S		7/2018	Loermann	D13/107
D823,246	S		7/2018	Lin	D13/108
D826,152	S		8/2018	Christiansen	D13/108
D841,581	S		2/2019	Bonahoom	D13/108
D843,937	S		3/2019	Xiao	D13/108
D850,713	S	*	6/2019	Northern	D27/175
2012/0227753	A1	*	9/2012	Newton	A24F 47/008 131/347
2013/0336358	A1	*	12/2013	Liu	G01K 13/002 374/152
2013/0342157	A1	*	12/2013	Liu	A24F 15/18 320/107
2017/0064429	A1		3/2017	Hirsch	H04R 1/1025

* cited by examiner

FIG. 1

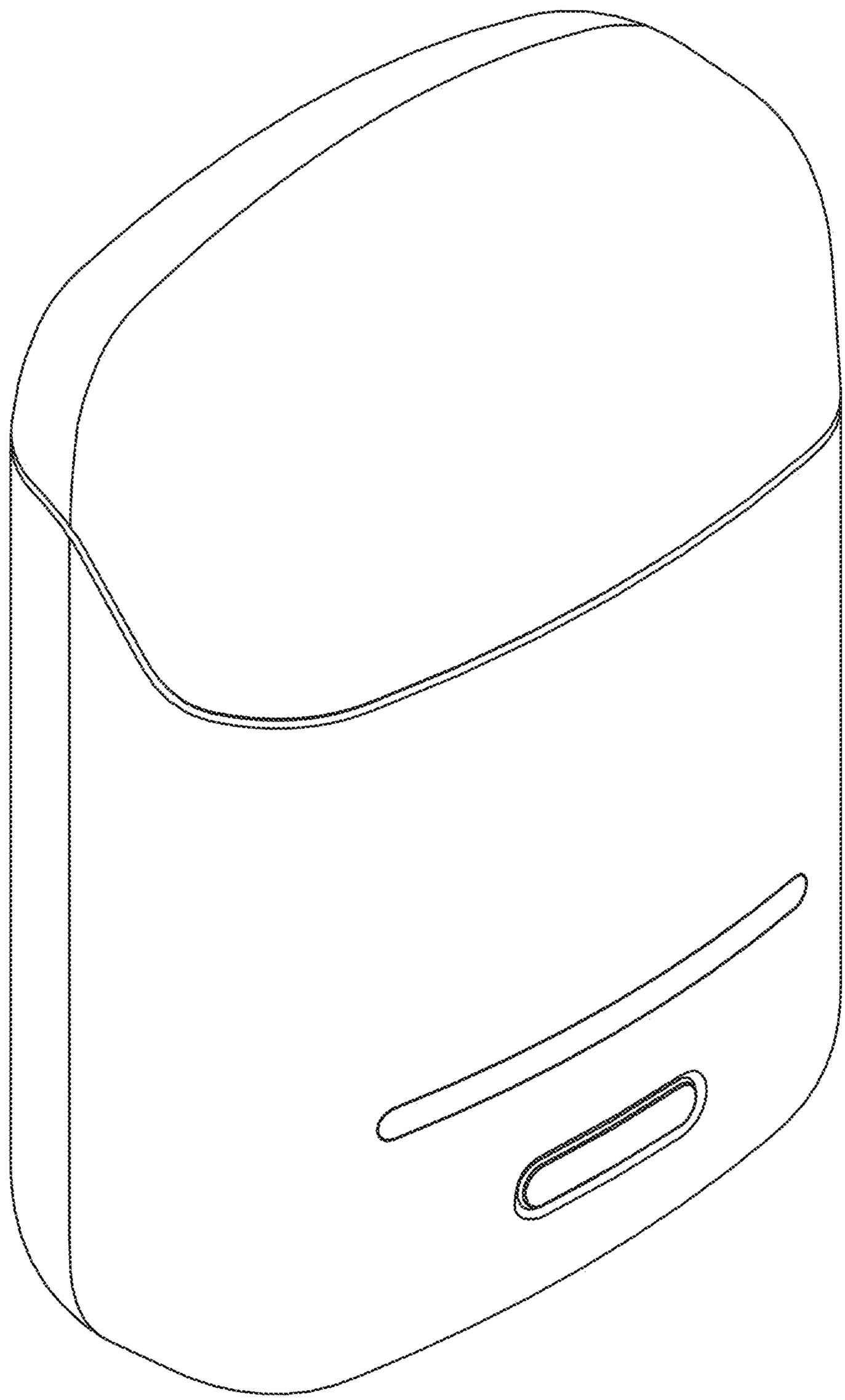

FIG. 2

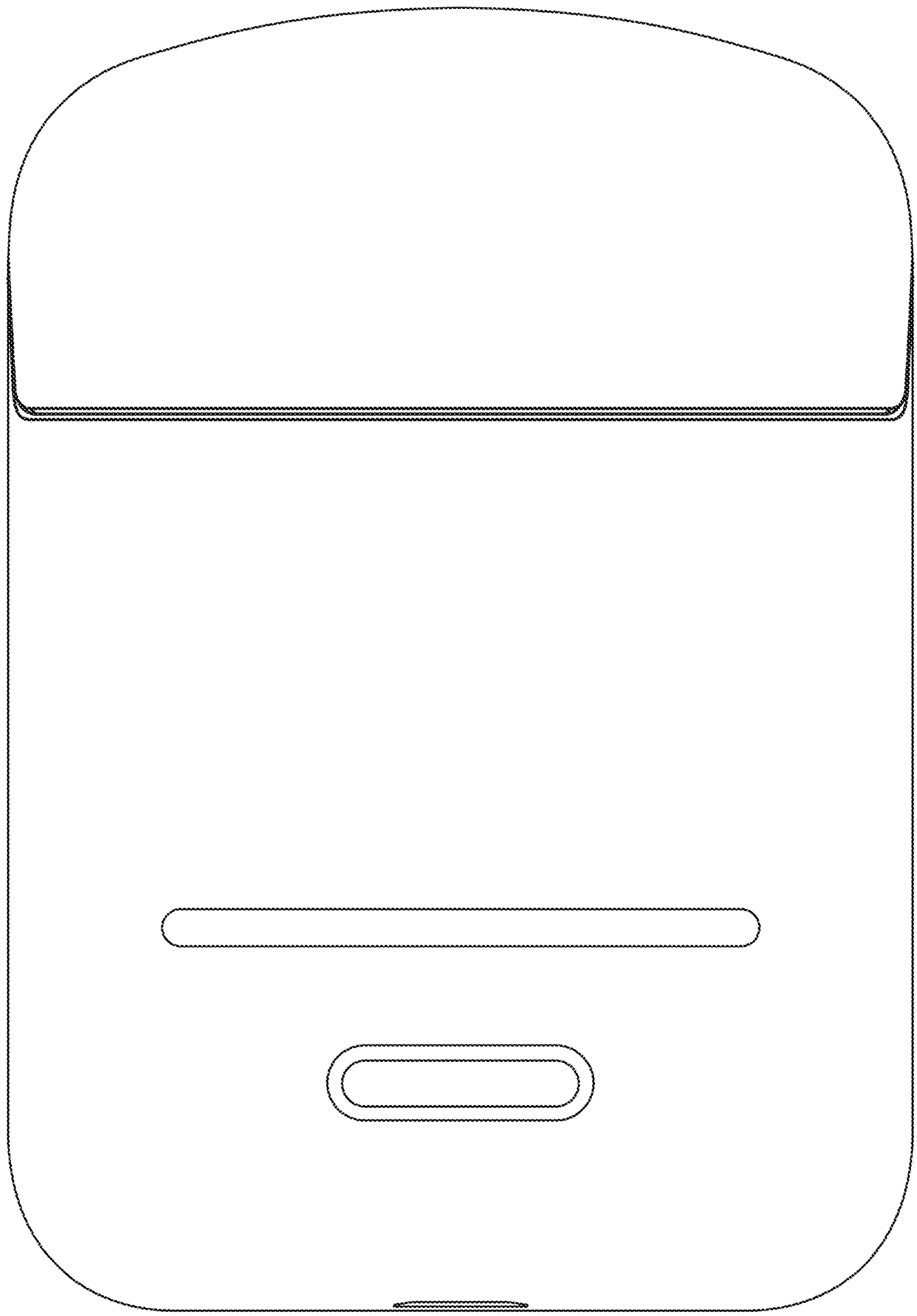

FIG. 3

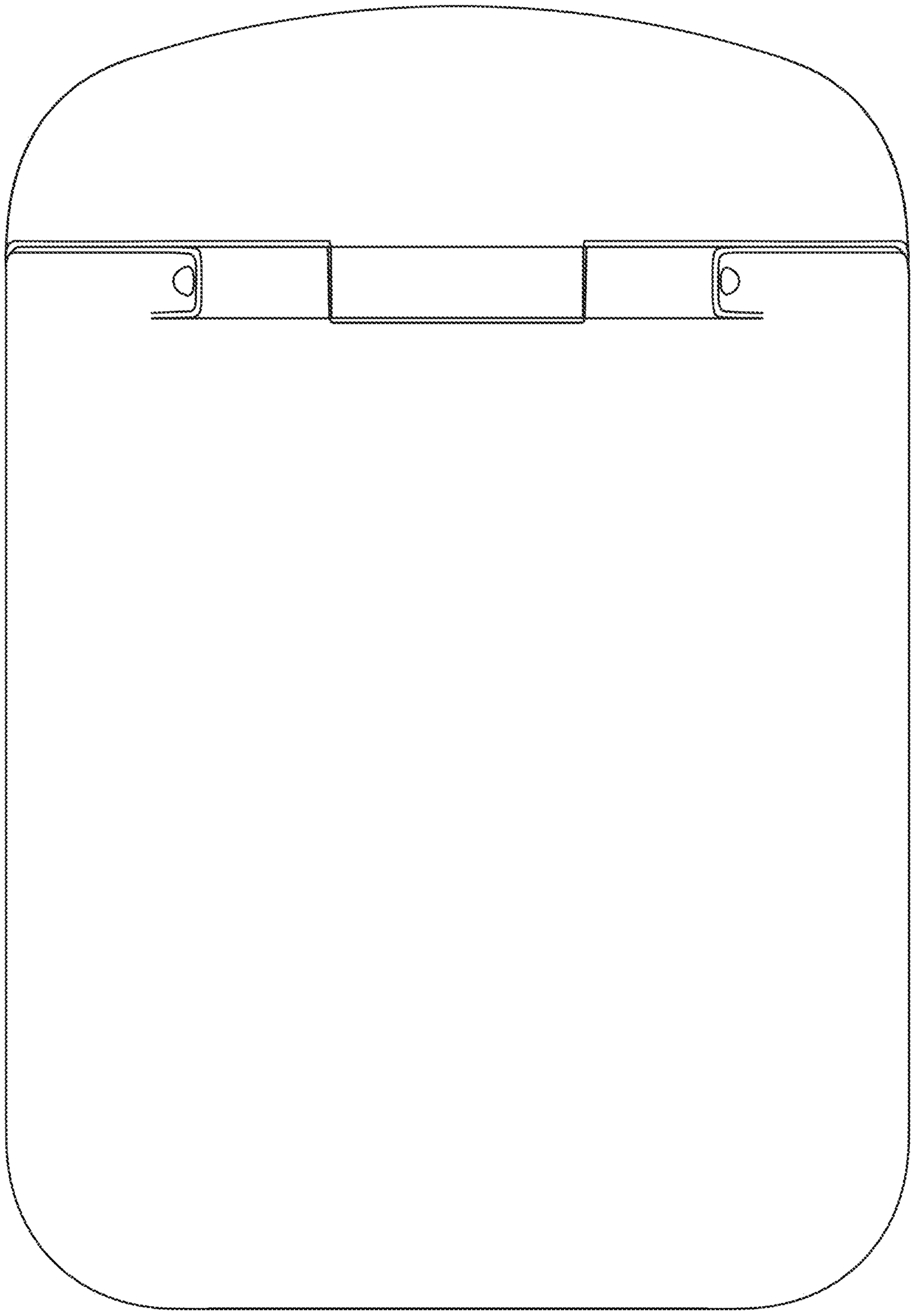

FIG. 4

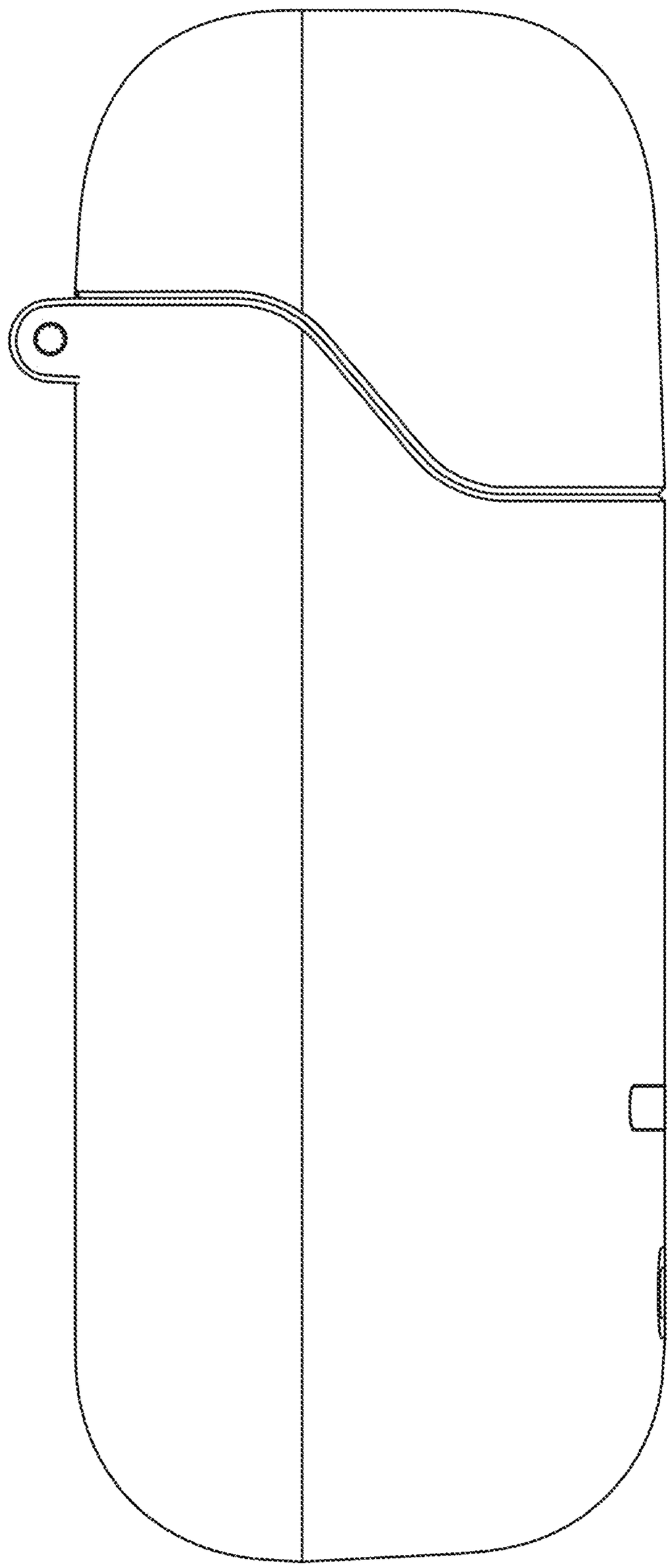

FIG. 5

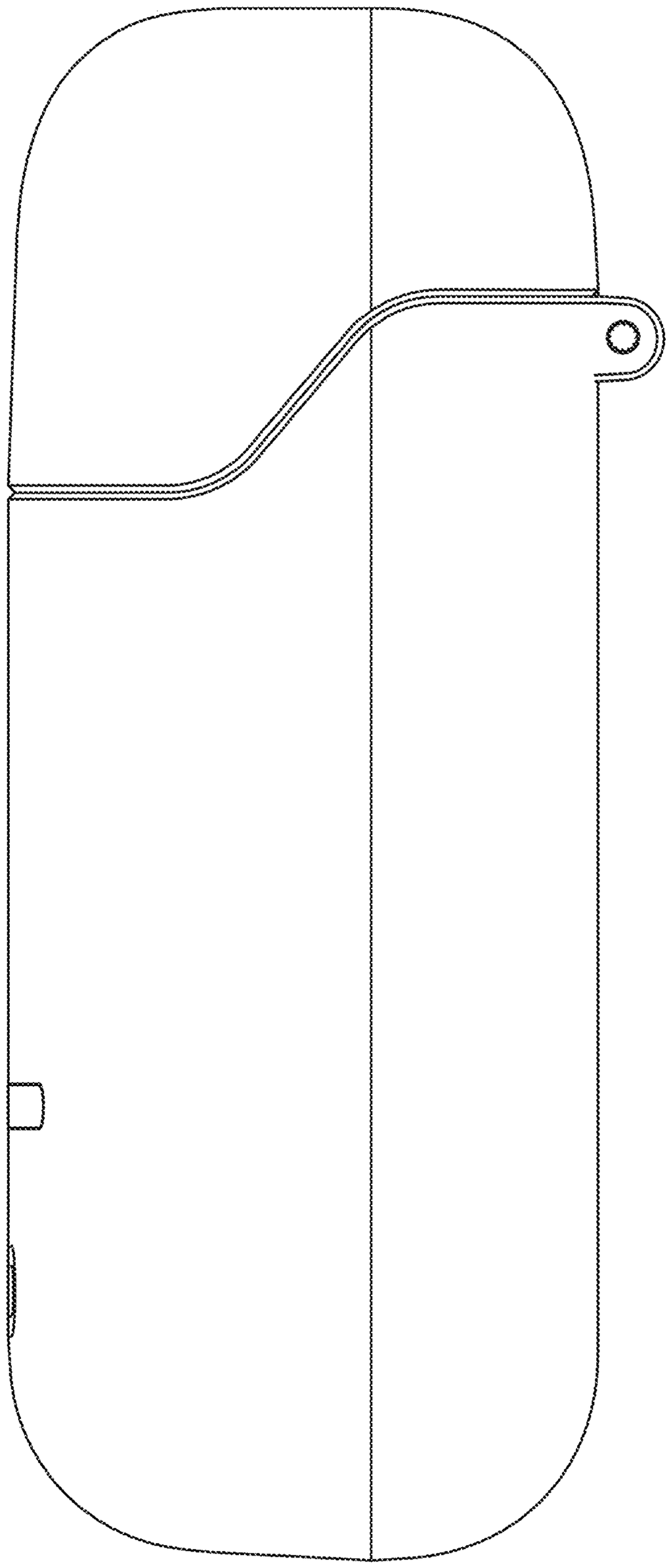

FIG. 6

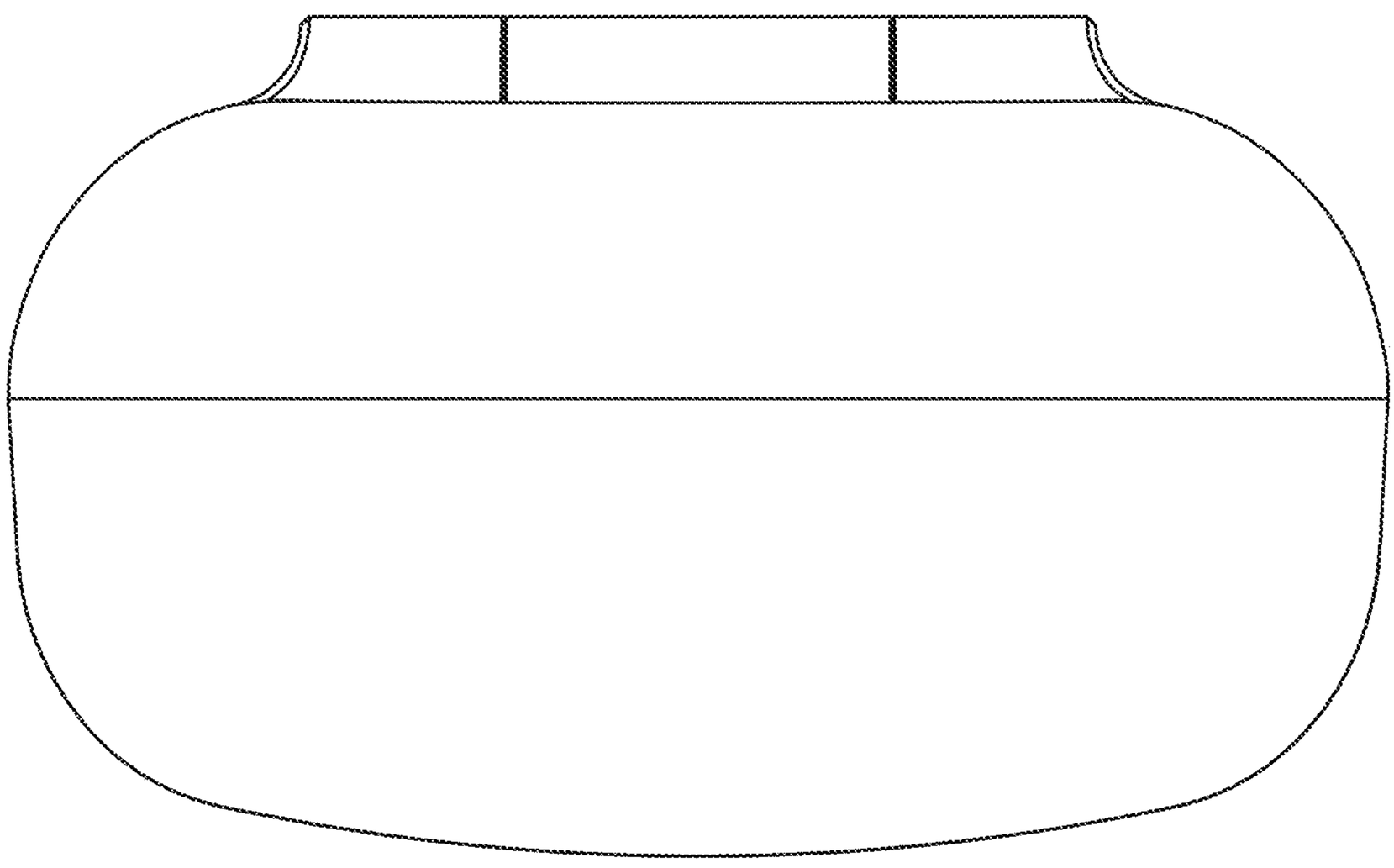
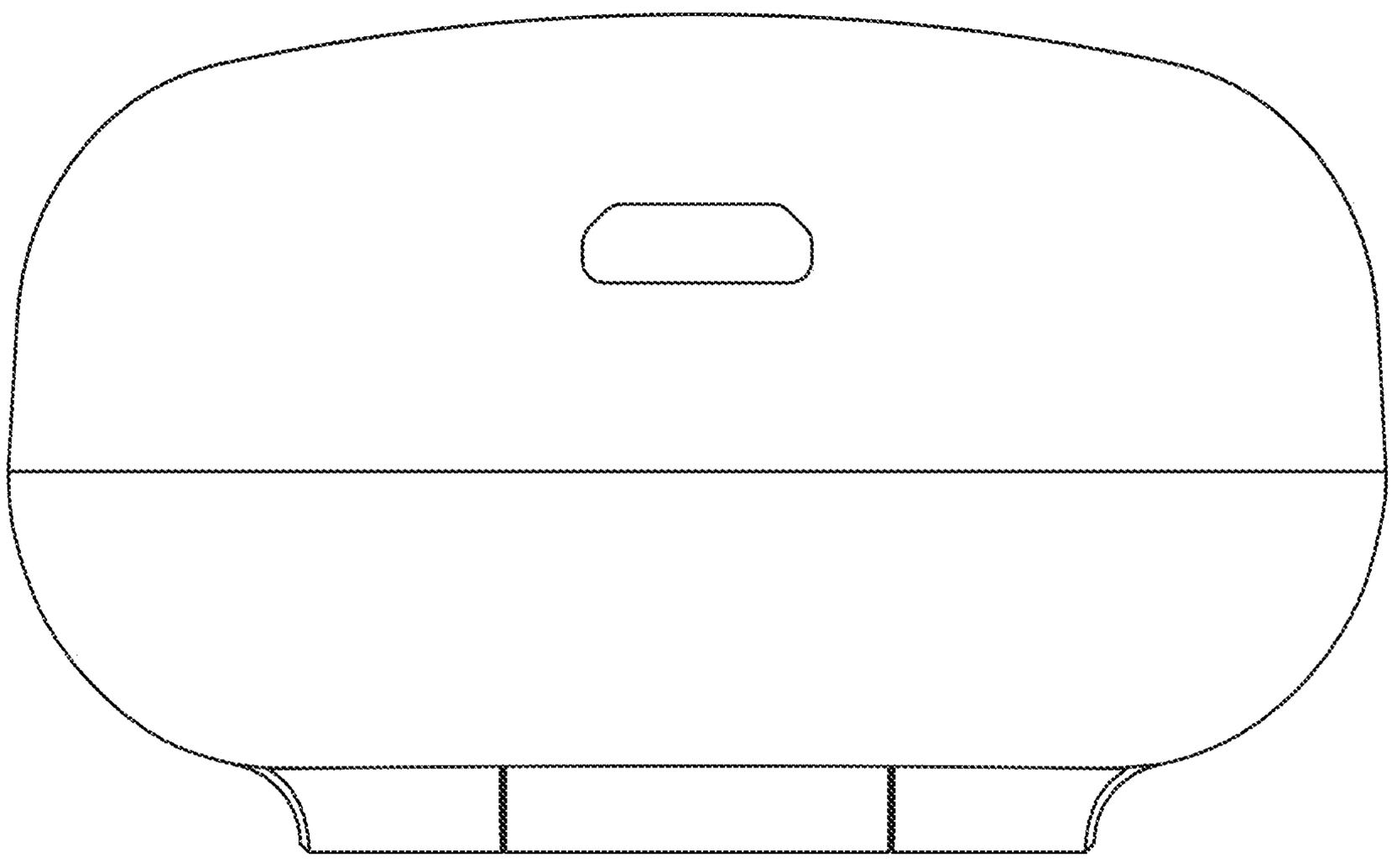
FIG. 7