US00D888040S

(12) United States Design Patent

Wright et al.

(10) Patent No.: US D888,040 S
(45) Date of Patent: ** Jun. 23, 2020

(54) **SLEEVE FOR ELECTRONIC DEVICE**

(71) Applicant: **CATALYST LIFESTYLE LIMITED**, North Point (HK)

(72) Inventors: **Joshua Wright**, Hong Kong (CN); **June Lai**, Hong Kong (CN)

(73) Assignee: **Catalyst Lifestyle Limited**, North Point (HK)

(**) Term: **15 Years**

(21) Appl. No.: **29/664,112**

(22) Filed: **Sep. 21, 2018**

(30) **Foreign Application Priority Data**

Mar. 22, 2018 (CN) 2018 3 0107823

(51) **LOC (12) Cl.** **14-03**

(52) **U.S. Cl.**
USPC **D14/250**; D3/218

(58) **Field of Classification Search**
USPC D3/201, 212, 207, 208, 218, 294, 299, D3/300, 303; D10/30; D24/201, 205, D24/217, 250, 251, 440, 447; D28/66, D28/76; D14/201, 205, 217, 250, 251, D14/440, 447
CPC . H04R 1/1016; H04R 1/105; A45C 2011/001; A45C 2011/002; A45C 2011/003; B65D 2585/6835
See application file for complete search history.

(56) **References Cited**

U.S. PATENT DOCUMENTS

D362,542 S 9/1995 Richards et al.
D375,197 S 11/1996 Laherty
(Continued)

FOREIGN PATENT DOCUMENTS

CN 201330337920.9 1/2014
CN 201430316889.5 2/2015
(Continued)

OTHER PUBLICATIONS

This Airpods Accessory is strangely awesome—Catalyst AirPods Case, publication date Apr. 7, 2017, [online][site visited Sep. 9, 2019] URL: https://www.cnet.com/news/coming-soon-a-waterproof-case-for-your-airpods-case/ (Year: 2017).*
(Continued)

Primary Examiner — Susan E Krakower
Assistant Examiner — L. A. Grabenstetter
(74) *Attorney, Agent, or Firm* — Dinsmore & Shohl LLP

(57) **CLAIM**

The ornamental design for a sleeve for electronic device, as shown and described.

DESCRIPTION

FIG. **1** is a perspective view including a front, top and one side of the sleeve for electronic device;
FIG. **2** is a perspective view including a rear, bottom and opposite side of the sleeve for electronic device;
FIG. **3** is a front elevation view of the sleeve for electronic device of FIG. **1**;
FIG. **4** is a rear elevation view of the sleeve for electronic device of FIG. **1**;
FIG. **5** is a side elevation view of the sleeve for electronic device of FIG. **1**;
FIG. **6** is an opposite side elevation view of the sleeve for electronic device of FIG. **1**;
FIG. **7** is a top plan view of the sleeve for electronic device of FIG. **1**; and,
FIG. **8** is a bottom plan view of the sleeve for electronic device of FIG. **1**.
The broken lines depict portions of the sleeve for electronic device that form no part of the claimed design.

1 Claim, 8 Drawing Sheets

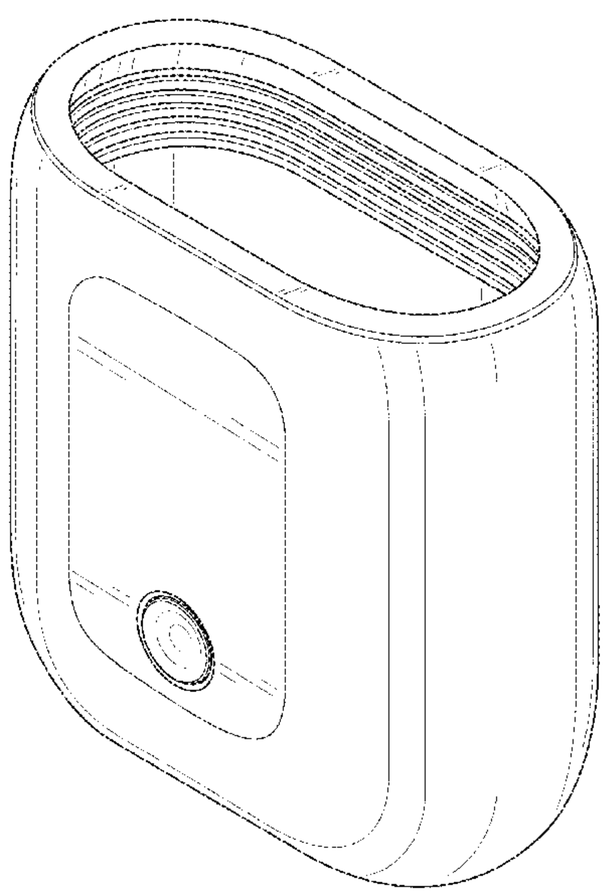

(56) **References Cited**

U.S. PATENT DOCUMENTS

D393,148	S	*	4/1998	Petruzzi	D3/208
5,740,624	A		4/1998	Baseley	
D399,604	S	*	10/1998	Wolff	D28/66
D405,256	S		2/1999	Chacon et al.	
6,305,538	B1		10/2001	Jackson	
D467,799	S		12/2002	Persson	
D475,696	S		6/2003	Hussaini et al.	
D478,721	S	*	8/2003	Anderton	D3/208
6,817,470	B1		11/2004	Goldberg	
D503,851	S	*	4/2005	Landow	D3/212
D531,618	S		11/2006	Kennemer et al.	
7,347,325	B2		3/2008	O'Neill et al.	
D569,608	S	*	5/2008	Rowe	D3/203.1
D570,597	S	*	6/2008	Klein	D14/484.1
D592,400	S		5/2009	Nelson	
D594,659	S		6/2009	Lown et al.	
D595,952	S		7/2009	Nussberger	
D596,393	S		7/2009	Leung et al.	
D599,546	S		9/2009	Lown et al.	
D600,913	S		9/2009	Kalbach	
7,584,841	B2		9/2009	Chan et al.	
D601,366	S		10/2009	Barabas et al.	
D604,040	S	*	11/2009	Fleming	D3/207
D620,259	S	*	7/2010	Fahrendorff	D3/303
D623,399	S	*	9/2010	McSweyn	D14/480.5
7,855,529	B2		12/2010	Liu	
D666,408	S	*	9/2012	Neely, III	D3/208
D666,824	S	*	9/2012	Phillips	D3/303
D669,272	S	*	10/2012	Yang	D3/303
D670,497	S		11/2012	Phillips et al.	
D672,642	S		12/2012	Supranowicz	
8,399,764	B2		3/2013	Klosky	
D681,613	S		5/2013	Magness et al.	
D692,664	S	*	11/2013	Rashid	D3/303
D707,041	S	*	6/2014	Park	D3/215
D711,866	S	*	8/2014	Kawata	D14/250
D718,750	S		12/2014	Young et al.	
D720,096	S		12/2014	McDougall	
D720,718	S	*	1/2015	Stevinson	D14/205
8,961,015	B1		2/2015	Bihn	
D735,991	S	*	8/2015	Brennan	D3/218
D740,653	S	*	10/2015	Akana	D9/418
D751,558	S	*	3/2016	Lee	D10/103
D766,905	S	*	9/2016	Lee	D14/440
D769,879	S	*	10/2016	Kim	D14/440
D775,818	S	*	1/2017	Ingraham	D3/218
D780,740	S	*	3/2017	Kim	D14/250
D781,295	S	*	3/2017	Tur	D14/440
D790,512	S	*	6/2017	Lee	D14/217
D794,617	S	*	8/2017	Wright	D14/203.3
D794,618	S	*	8/2017	Wright	D14/203.3
D800,700	S	*	10/2017	Bergman	D14/217
D806,388	S	*	1/2018	Akana	D3/294
D808,791	S		1/2018	Johnston et al.	
D818,268	S		5/2018	Akana et al.	
D849,401	S		5/2019	Akana et al.	
D864,971	S		10/2019	Lee et al.	
D872,723	S		1/2020	Lee et al.	
D872,724	S		1/2020	Lee et al.	

FOREIGN PATENT DOCUMENTS

CN	201730139442.9	10/2017
CN	201730147900.3	11/2017
CN	201730208864.7	12/2017
CN	201730348926.4	1/2018
CN	201730395572.9	2/2018
CN	201730428901.5	2/2018
CN	201730483408.3	3/2018
KR	30-2003-0025093	6/2004

OTHER PUBLICATIONS

This glow-in-the-dark,waterproof AirPods case—Catalist AirPods Case, publication date Apr. 14, 2017, [online][site visited Sep. 9, 2019] URL: https://www.theverge.com/circuitbreaker/2017/4/14/15306100/catalyst-case-airpods-sale-glow-in-the-dark (Year: 2017).*

Notice of Allowance and Fee(s) Due dated Apr. 9, 2020 pertaining to U.S. Appl. No. 29/665,170, filed Oct. 1, 2018, 21 pgs.

* cited by examiner

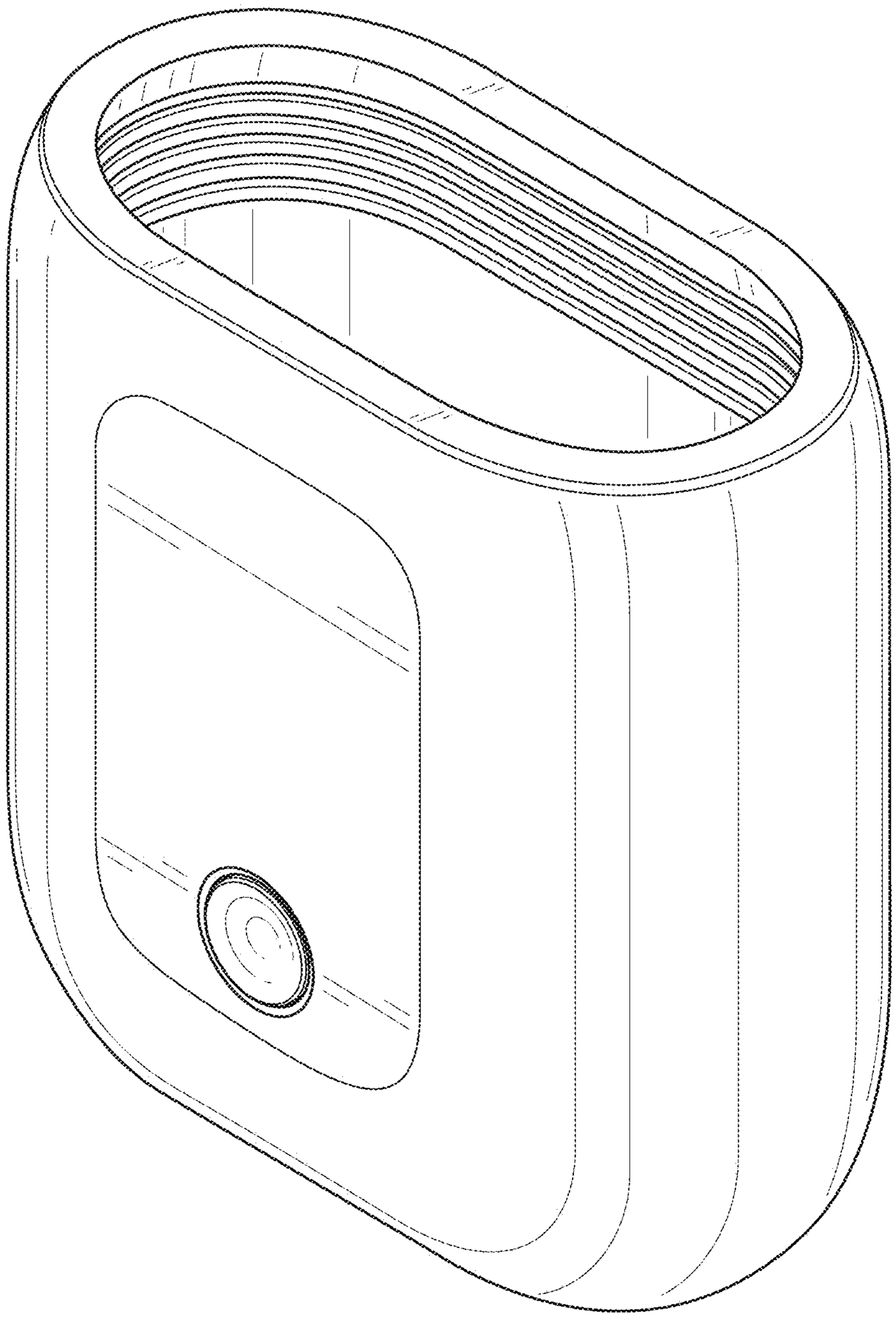

FIG. 1

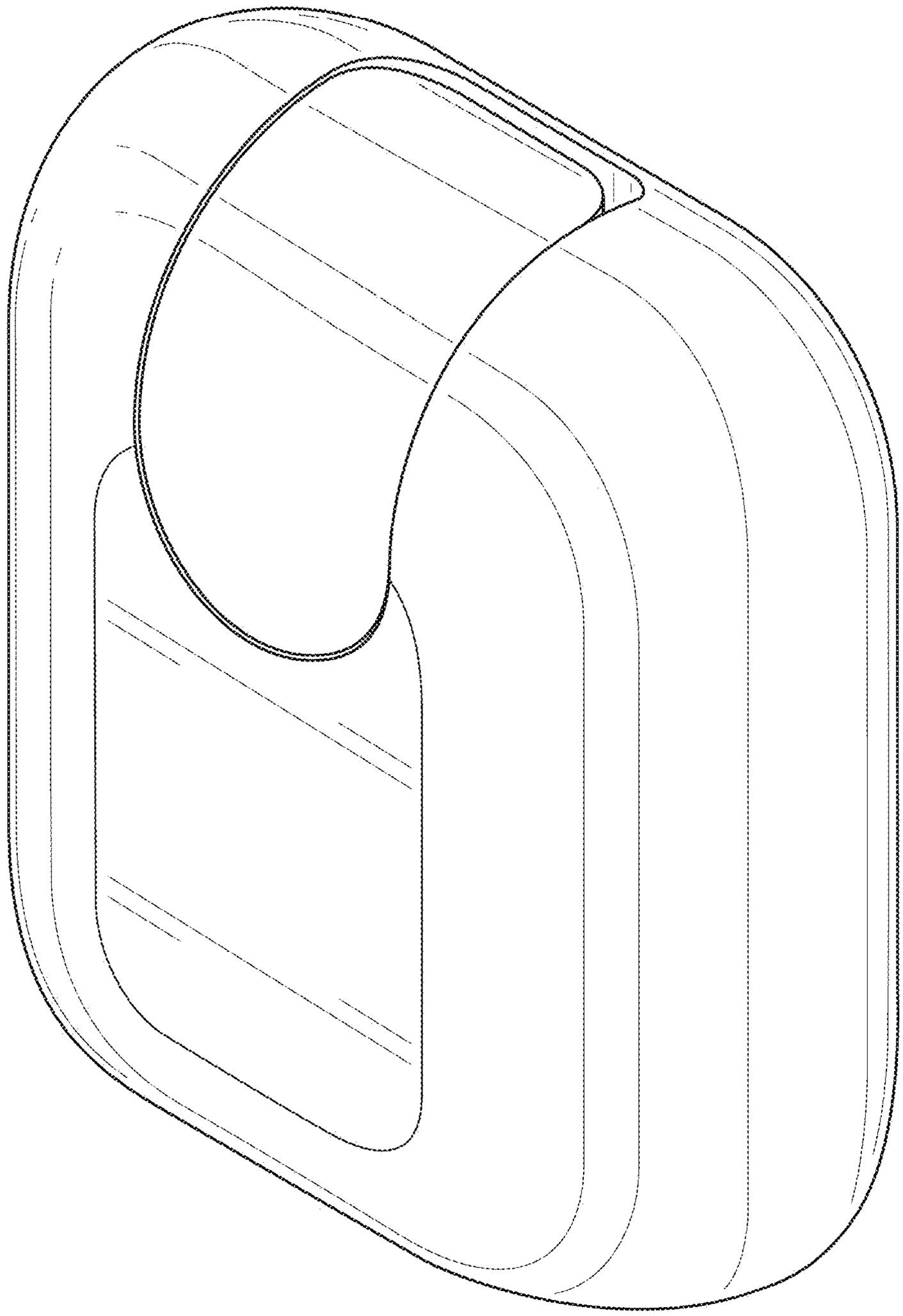

FIG. 2

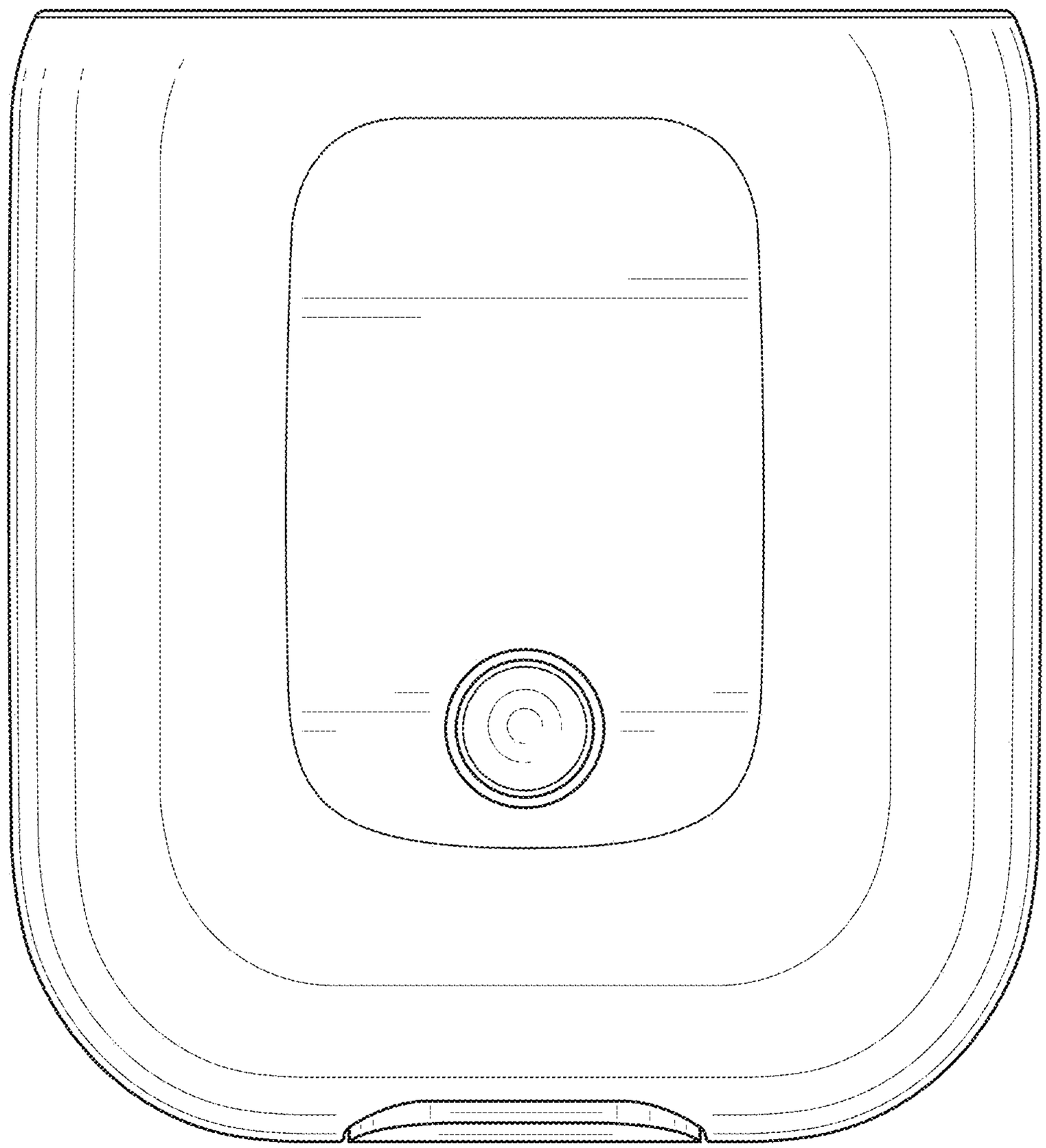

FIG. 3

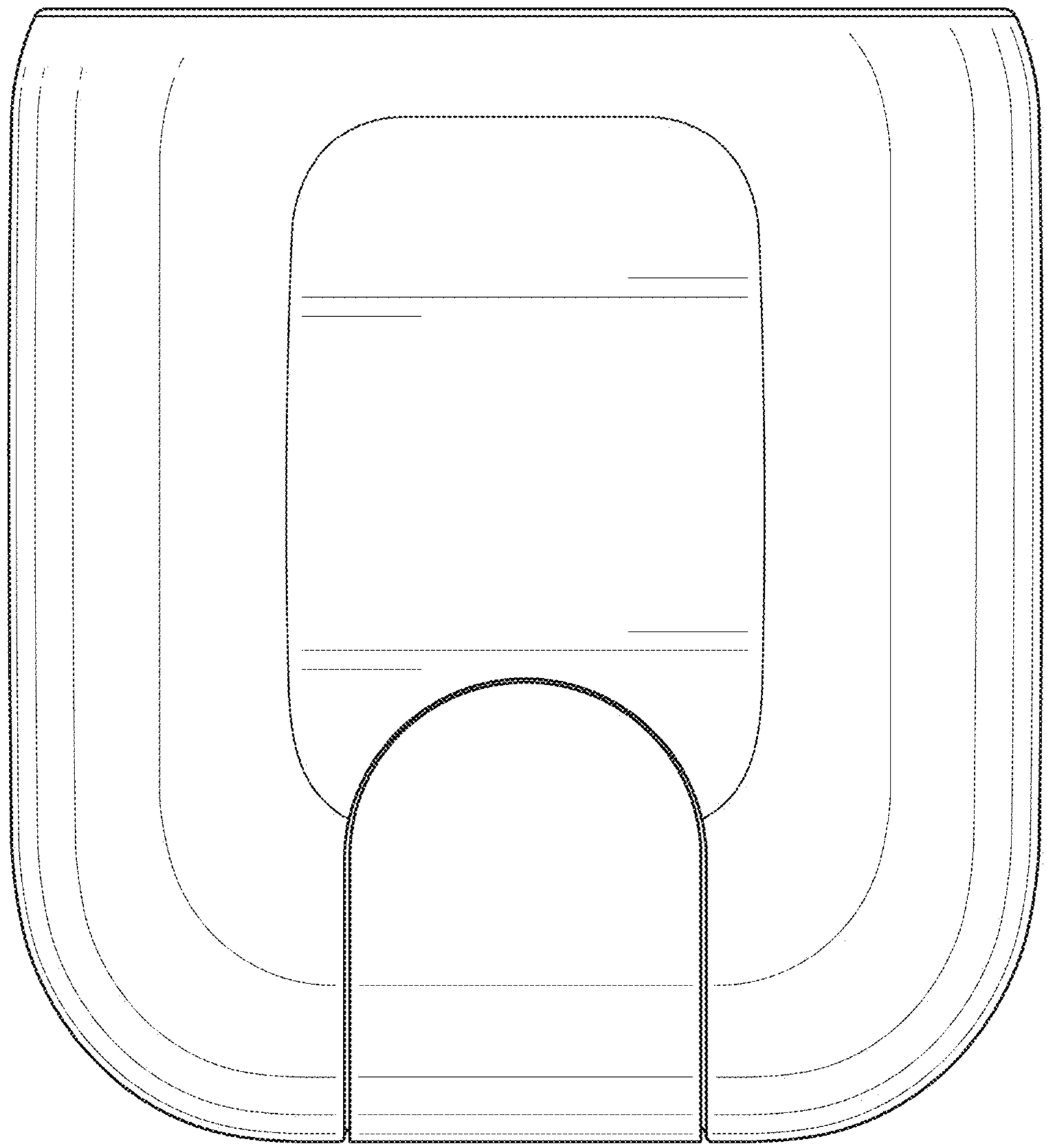

FIG. 4

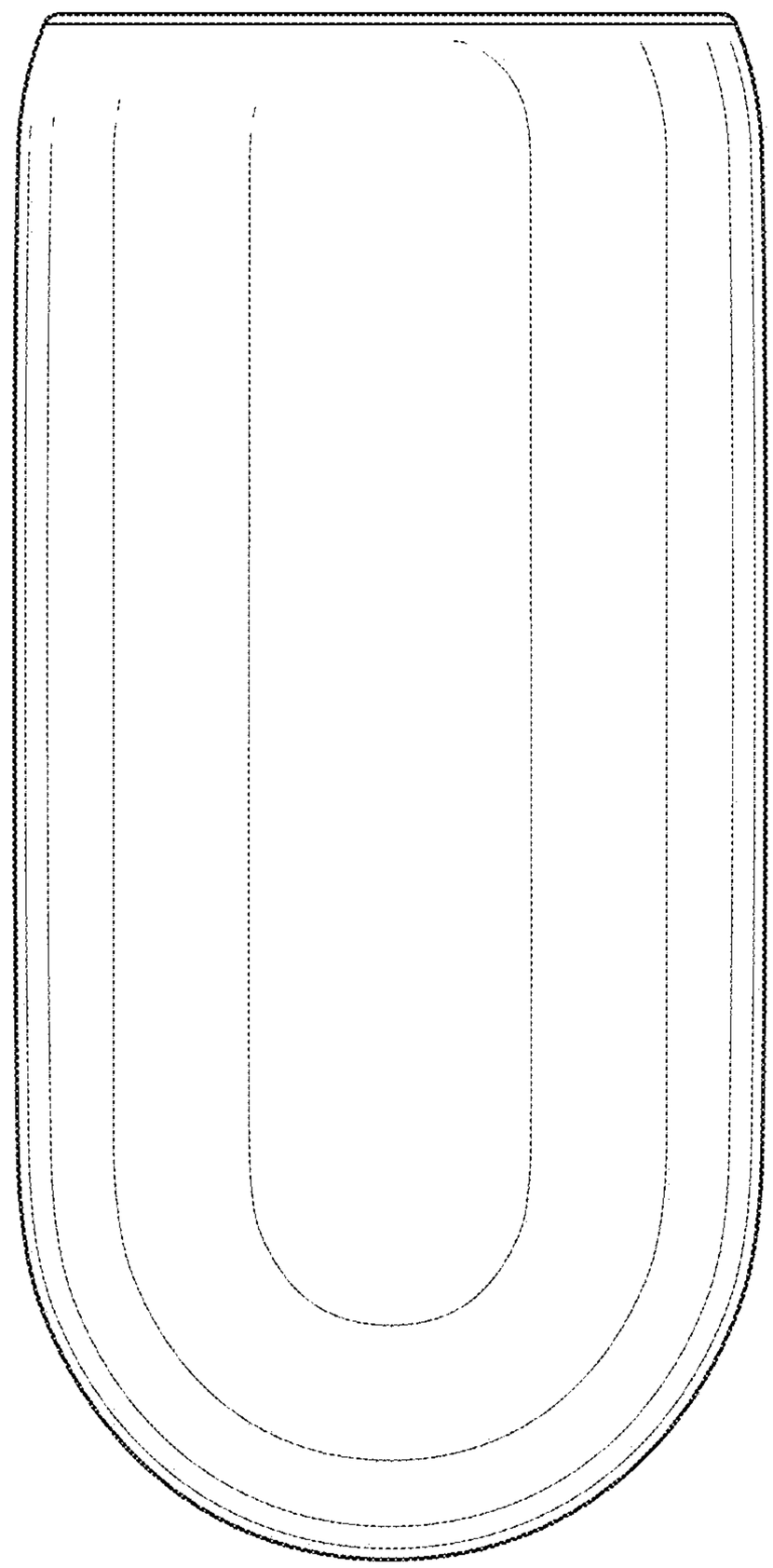

FIG. 5

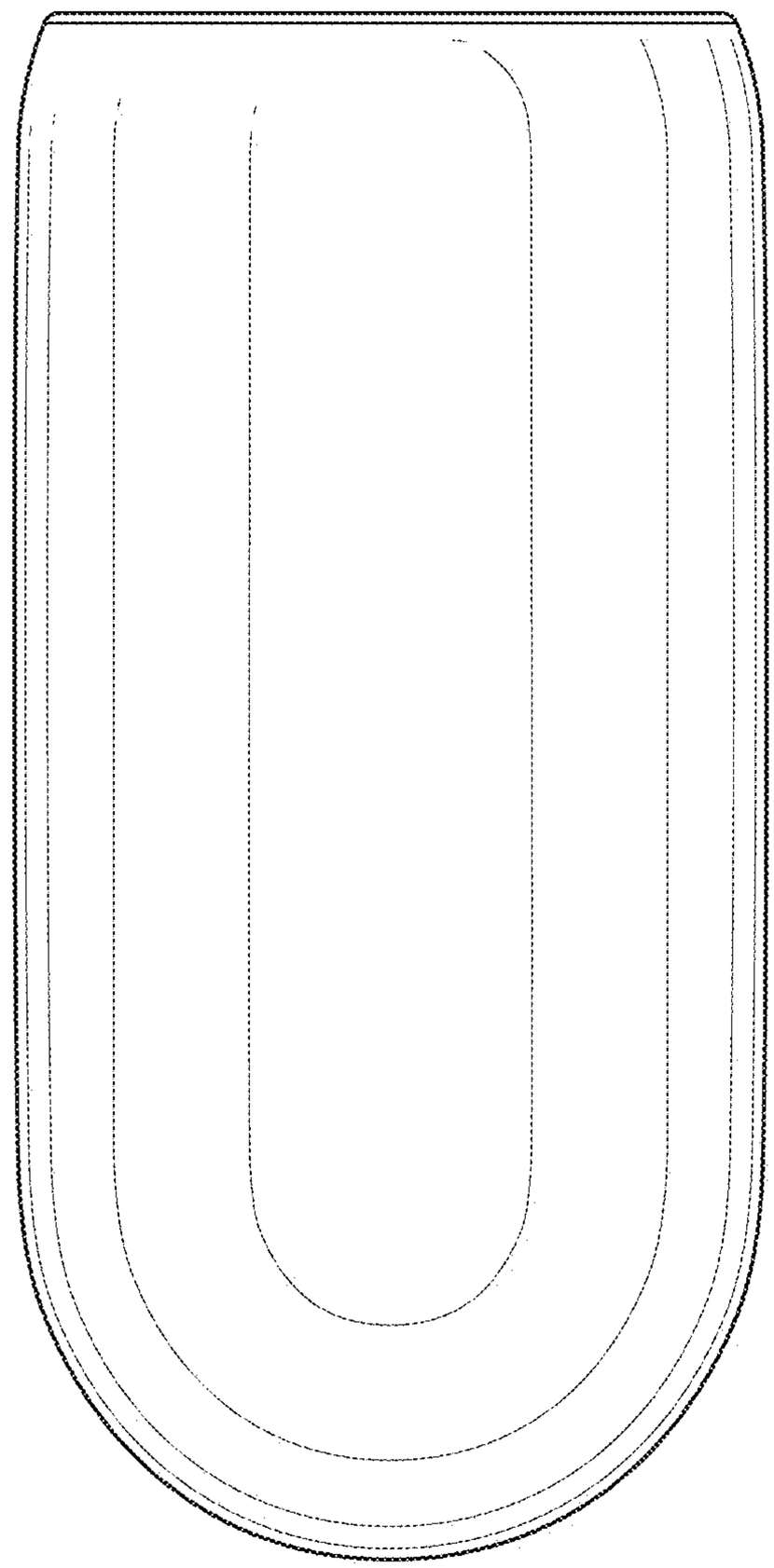

FIG. 6

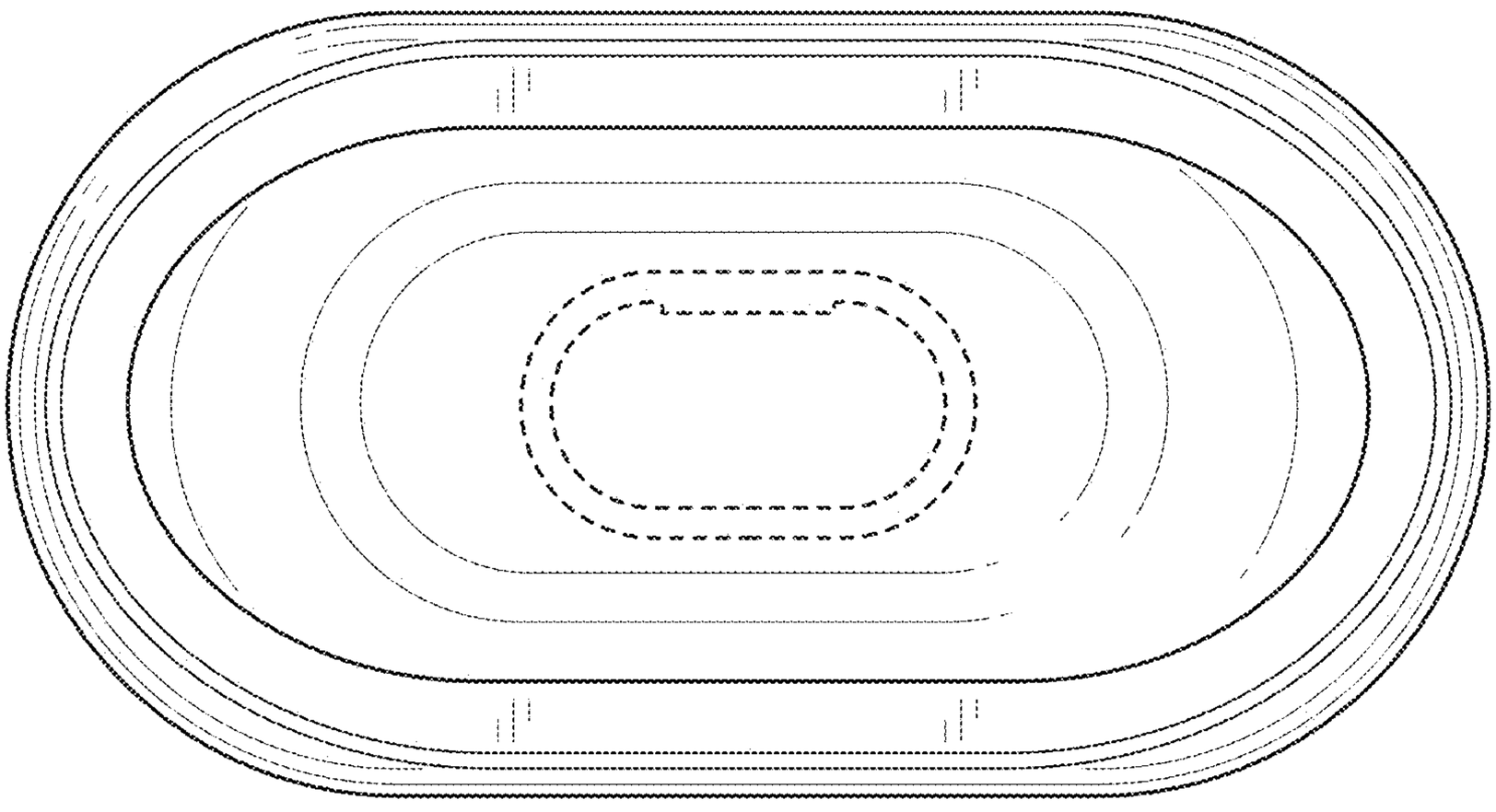

FIG. 7

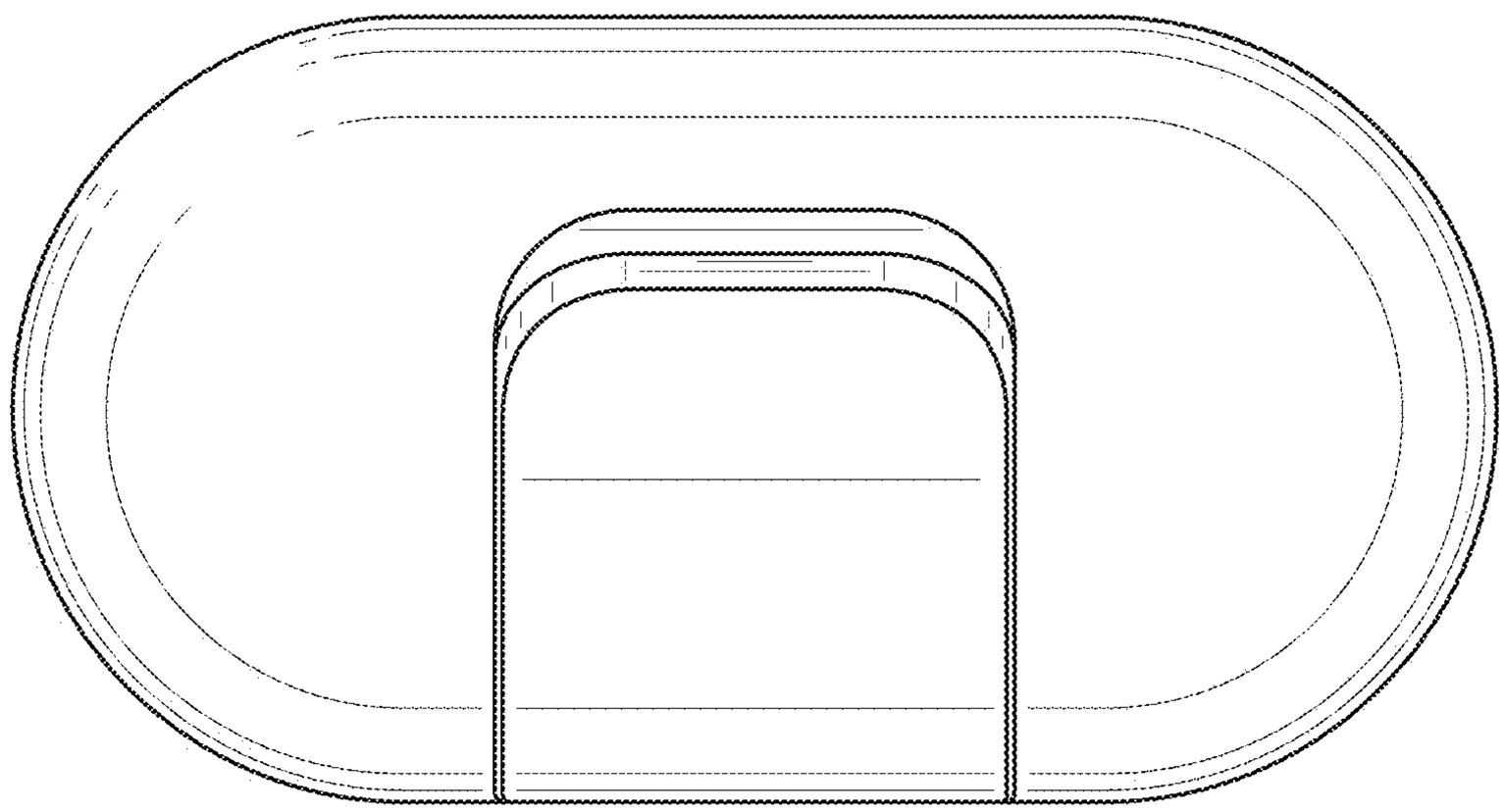

FIG. 8