US00D887415S

(12) United States Design Patent

Claudepierre et al.

(10) Patent No.: US D887,415 S
(45) Date of Patent: ** Jun. 16, 2020

(54) **ADJUSTABLE FOLIO**

(71) Applicant: **Google LLC**, Mountain View, CA (US)

(72) Inventors: **Vincent Claudepierre**, San Fracisco, CA (US); **Christophe Koch**, Santa Cruz, CA (US); **Joseph Tsao**, Grandview, MO (US)

(73) Assignee: **Google LLC**, Mountain View, CA (US)

(**) Term: **15 Years**

(21) Appl. No.: **29/649,420**

(22) Filed: **May 30, 2018**

(51) **LOC (12) Cl.** **14-02**

(52) **U.S. Cl.**
USPC **D14/440**

(58) **Field of Classification Search**
USPC D14/440, 447, 250; 206/45.23, 320, 206/45.2; 361/679.55; 294/25; 224/218
CPC G06F 1/1628; G06F 1/1626; A47B 23/044
See application file for complete search history.

(56) **References Cited**

U.S. PATENT DOCUMENTS

D658,187 S * 4/2012 Diebel G06F 1/1679 D14/440
D696,253 S * 12/2013 Akana D14/345
D696,669 S * 12/2013 Akana D14/440
D703,209 S * 4/2014 Marcus D14/440
D713,402 S * 9/2014 Akana D14/341
D723,036 S 2/2015 Longo et al.
D752,593 S * 3/2016 Diebel G06F 1/1679 D14/440
D766,711 S 9/2016 Babbage
D770,457 S * 11/2016 Massucco D14/440
D773,454 S * 12/2016 Akana D14/341
D784,995 S * 4/2017 Akana D14/440
D786,238 S 5/2017 Roberts
D788,108 S 5/2017 Cai
D789,941 S 6/2017 Sauvage et al.
D792,884 S * 7/2017 Nyholm D14/440
D794,120 S 8/2017 Takemura
D800,725 S 10/2017 Akana et al.
D807,365 S 1/2018 Liu
D808,394 S * 1/2018 Lakraa D14/440
D808,950 S 1/2018 Miele et al.
D811,409 S 2/2018 Zhong
D820,838 S * 6/2018 Akana D14/345
D832,256 S 10/2018 King
D837,793 S * 1/2019 Ham D14/440
D847,820 S 5/2019 Pisapia
D857,023 S * 8/2019 Hyun D14/440
2005/0055861 A1 3/2005 McAnulty
2008/0024388 A1 1/2008 Bruce
2008/0167095 A1* 7/2008 Kim H04M 1/0216 455/575.3
2009/0159763 A1* 6/2009 Kim F16M 13/00 248/174
2009/0194209 A1* 8/2009 De Filippis A45C 11/00 150/107
2011/0305496 A1 12/2011 Jolani
2012/0268891 A1* 10/2012 Cencioni G06F 1/1626 361/679.55
2012/0308981 A1* 12/2012 Libin G09B 3/00 434/362
2013/0088431 A1* 4/2013 Ballagas G06F 1/1626 345/168
2013/0223005 A1* 8/2013 Smith G06F 1/1628 361/679.55
2013/0233762 A1* 9/2013 Balaji B65D 25/00 206/736
2013/0241381 A1* 9/2013 Hynecek H05K 5/0217 312/240
2013/0334385 A1 12/2013 Steck et al.
2014/0246340 A1* 9/2014 Jiang A45C 11/00 206/45.23
2015/0065208 A1* 3/2015 Balaji H04M 1/04 455/575.8
2015/0151887 A1* 6/2015 Huang A45C 11/00 224/191
2015/0237979 A1* 8/2015 Huang A45C 11/00 206/45.25
2015/0263776 A1* 9/2015 Shyu A45C 13/002 455/575.8
2015/0266610 A1* 9/2015 Melmon B65D 5/5206 206/45.23
2015/0280768 A1* 10/2015 Huang H04B 1/3888 455/575.8
2016/0123525 A1 5/2016 Nguyen
2017/0097698 A1 4/2017 Maeshima

FOREIGN PATENT DOCUMENTS

AU 366856 1/2016
JP 1485391 S 12/2013

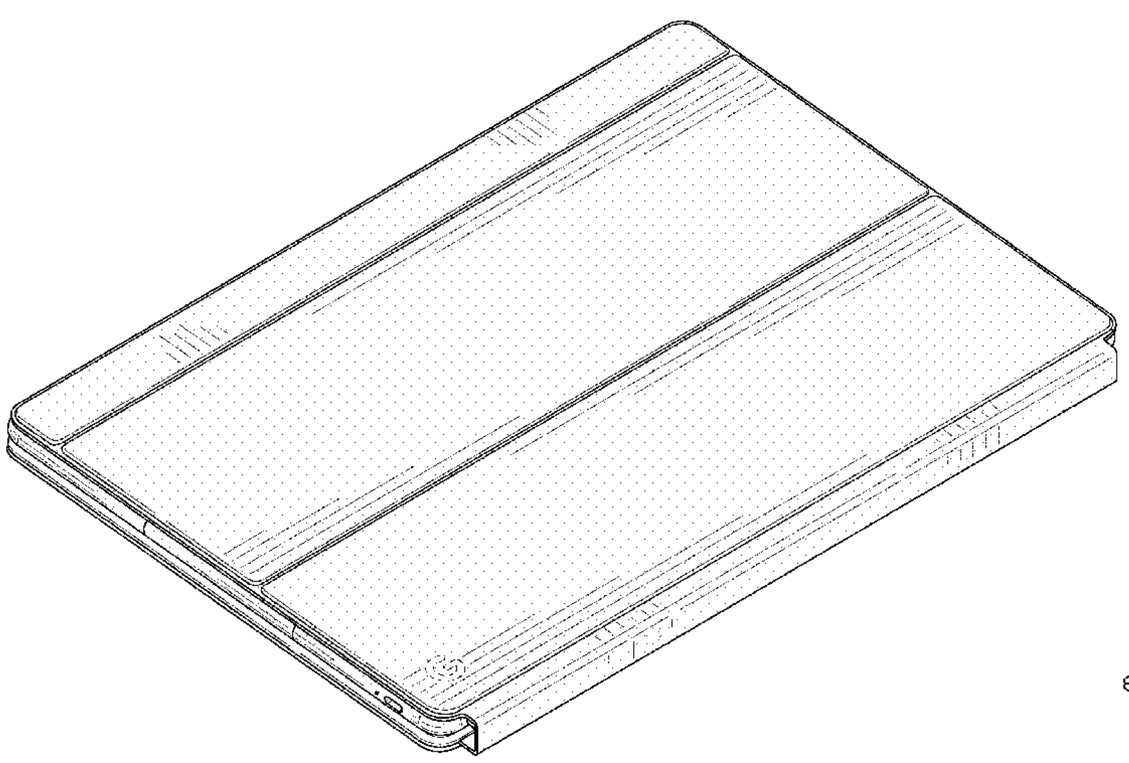

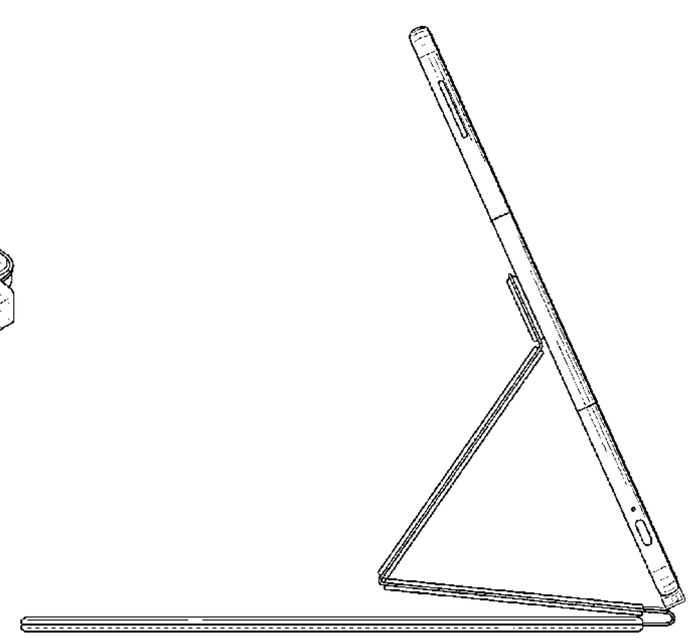

JP	1563511	S	3/2016
JP	1547736		4/2016
JP	HJ2802750700		8/2016
JP	1561006	S	10/2016
JP	1562100	S	10/2016
JP	1573144	S	4/2017
JP	1602027	S	4/2018
JP	1628151		4/2019
KR	3006743410000		12/2012
KR	3008018220007		7/2015
KR	3008018220008		7/2015
KR	3008018220009		7/2015
TW	D149031		9/2012
TW	D185609		9/2012
TW	D150033		11/2012
TW	M443891	U	12/2012
TW	D152708		4/2013
TW	D168347		6/2015
TW	D169480		8/2015
TW	D185980		10/2017

OTHER PUBLICATIONS

Examination Report for Canada Application No. 183505, dated Jul. 4, 2019 3 pages.
Examination Report for Canada Application No. 183507, dated Jul. 4, 2019 2 pages.
Notification from Japanese Patent Office for Application No. 2018-020359, dated Mar. 26, 2019.
Office Action for JP Design Application No. 2019003761, dated Aug. 20, 2019 4 pages (with English Translation).
ROC (Taiwan) Search Report for Design Patent Application No. 107305660 dated Aug. 29, 2019.
Sony, Digital Paper DPT-S1, p. 1, Apr. 28, 2016.
ROC Taiwan Office Action and Search Report for Application No. 108304974 dated Nov. 28, 2019.
ROC Taiwan Office Action and Search Report for Application No. 108304975 dated Nov. 27, 2019.
ROC Taiwan Office Action and Search Report for Application No. 108304976 dated Nov. 27, 2019.
Chrome Unboxed. "Pixelbook Pen Loop Installation." Feb. 15, 2018. YouTube Video. Can be viewed online at: <https://www.youtube.com/watch?v=ifl0rDBYKgw>.
Design Examination Report No. 1 for Australian Design Patent Application No. 201815555 dated Feb. 27, 2019. 13 pages.
Google Image Search for "Stylus Holder Loop" conducted by the Australian Patent Examiner in Design Examination Report No. 1 dated Feb. 27, 2019 for AU design patent application No. 201815555. 1 page.
Lora, Krystal. "Google Pixel Slate Unboxing!" Nov. 27, 2018. YouTube Video. Can be viewed online at: <https://www.youtube.com/watch?v=JkTpexyCZ0c>.
Whitwam, Ryan. "Pixelbook." Jan. 18, 2018. 1 page. Retrieved from the Internet: <https://www.androidpolice.com/2018/01/18/google-offering-free-pen-loop-anyone-bought-pixelbook/>.
Ødegård, Andreas. "Add a stylus holder to your tablet for $2." Feb. 19, 2011 1 page. Retrieved from the Internet: <https://www.pocketables.com/2011/02/add-a-stylus-holder-to-your-tablet-for-2.html>.
Ødegård, Andreas. "From the DIY drawer: Accessory attachment system for cases [Video]." Mar. 13, 2013. 1 page. Retrieved from the Internet: <https://www.pocketables.com/2013/03/from-the-diy-drawer-accessory-attachment-system-for-cases.html>.
Taiwanese Office Action for Application No. 107305659 dated Sep. 27, 2019.
Taiwanese Office Action and Search Report for Application No. 107305658 dated Sep. 27, 2019.

* cited by examiner

Primary Examiner — Cynthia R Underwood

(74) *Attorney, Agent, or Firm* — Botos Churchill IP Law

(57) **CLAIM**

The ornamental design for an adjustable folio, as shown and described.

DESCRIPTION

The present application is related to U.S. Design patent application Ser. No. 29/649,419, entitled Convertible Laptop Computer, and to U.S. Design patent application Ser. No. 29/649,425, entitled Stylus Loop, both filed concurrently herewith, the entire disclosures of which are incorporated herein by reference.

FIG. **1** is a top perspective view of the adjustable folio according to a first embodiment of our design in a closed configuration in a first state of use;
FIG. **2** is a front elevation view thereof;
FIG. **3** is a rear elevation view thereof;
FIG. **4** is a right side elevation view thereof;
FIG. **5** is a left side elevation view thereof;
FIG. **6** is a top elevation view thereof;
FIG. **7** is a bottom elevation view thereof;
FIG. **8** is a top perspective view of the adjustable folio according to a second embodiment of our design in the first closed configuration in the first state of use;
FIG. **9** is a front elevation view thereof;
FIG. **10** is a rear elevation view thereof;
FIG. **11** is a right side elevation view thereof;
FIG. **12** is a left side elevation view thereof;
FIG. **13** is a top elevation view thereof;
FIG. **14** is a bottom elevation view thereof;
FIG. **15** is a top perspective view of the adjustable folio according to our design in a second state of use;
FIG. **16** is a front elevation view thereof;
FIG. **17** is a rear elevation view thereof;
FIG. **18** is a right side elevation view thereof;
FIG. **19** is a left side elevation view thereof;
FIG. **20** is a top elevation view thereof;
FIG. **21** is a bottom elevation view thereof;
FIG. **22** is a top perspective view of the adjustable folio according to our design in a third state of use;
FIG. **23** is a front elevation view thereof;
FIG. **24** is a rear elevation view thereof;
FIG. **25** is a right side elevation view thereof;
FIG. **26** is a left side elevation view thereof;
FIG. **27** is a top elevation view thereof;
FIG. **28** is a bottom elevation view thereof;
FIG. **29** is a top perspective view of the adjustable folio according to our design in a fourth state of use;
FIG. **30** is a front elevation view thereof;
FIG. **31** is a rear elevation view thereof;
FIG. **32** is a right side elevation view thereof;
FIG. **33** is a left side elevation view thereof;
FIG. **34** is a top elevation view thereof;
FIG. **35** is a bottom elevation view thereof;
FIG. **36** is a top perspective view of the adjustable folio according to our design in a fifth state of use;
FIG. **37** is a front elevation view thereof;
FIG. **38** is a top perspective view of the adjustable folio according to our design in a sixth state of use;
FIG. **39** is a front elevation view thereof;
FIG. **40** is a top perspective view of the adjustable folio according to our design in a seventh state of use;
FIG. **41** is a front elevation view thereof;

FIG. **42** is a top perspective view of the adjustable folio according our design in an eighth state of use;
FIG. **43** is a front elevation view thereof;
FIG. **44** is a top perspective view of the adjustable folio according to our design in a ninth statue of use;
FIG. **45** is a front elevation view thereof;
FIG. **46** is a top perspective view of the adjustable folio according to our design in a tenth state of use;
FIG. **47** is a front elevation view thereof;
FIG. **48** is a rear elevation view thereof;
FIG. **49** is a right side elevation view thereof;
FIG. **50** is a left side elevation view thereof;
FIG. **51** is a top elevation view thereof; and,
FIG. **52** is a bottom elevation view thereof.
Broken lines are environmental only and form no part of the claimed design.

1 Claim, 42 Drawing Sheets

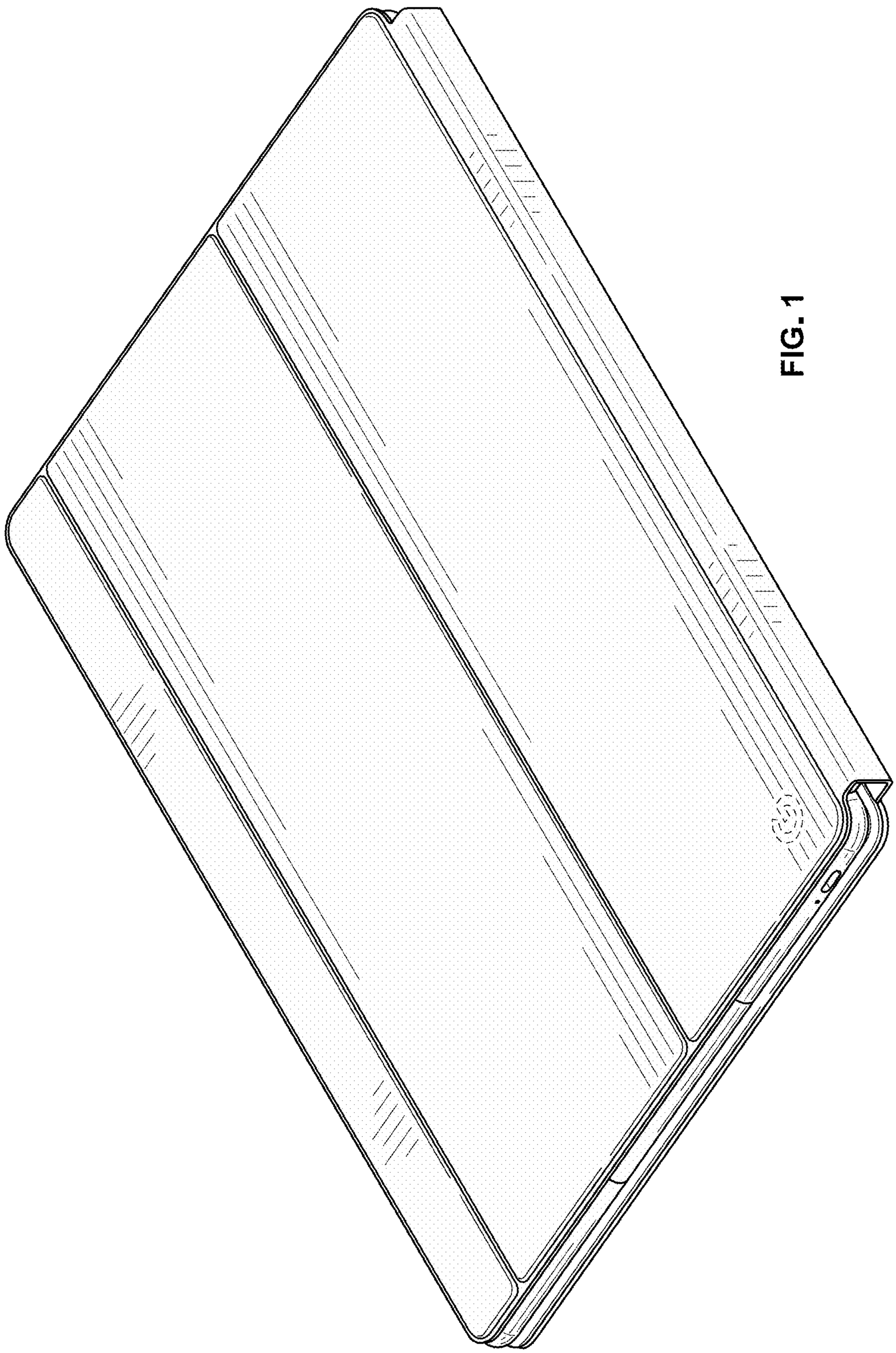

FIG. 1

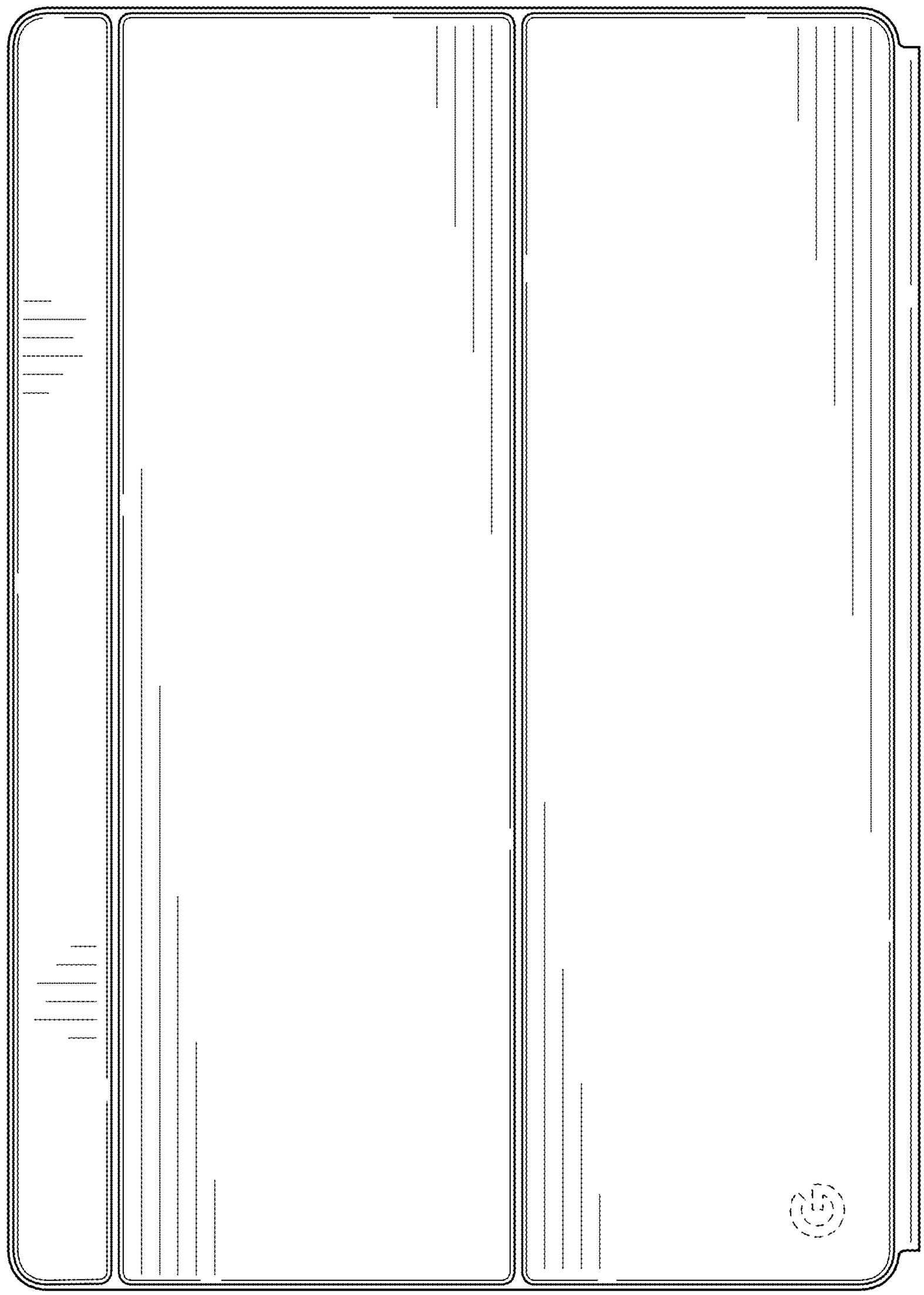

FIG. 2

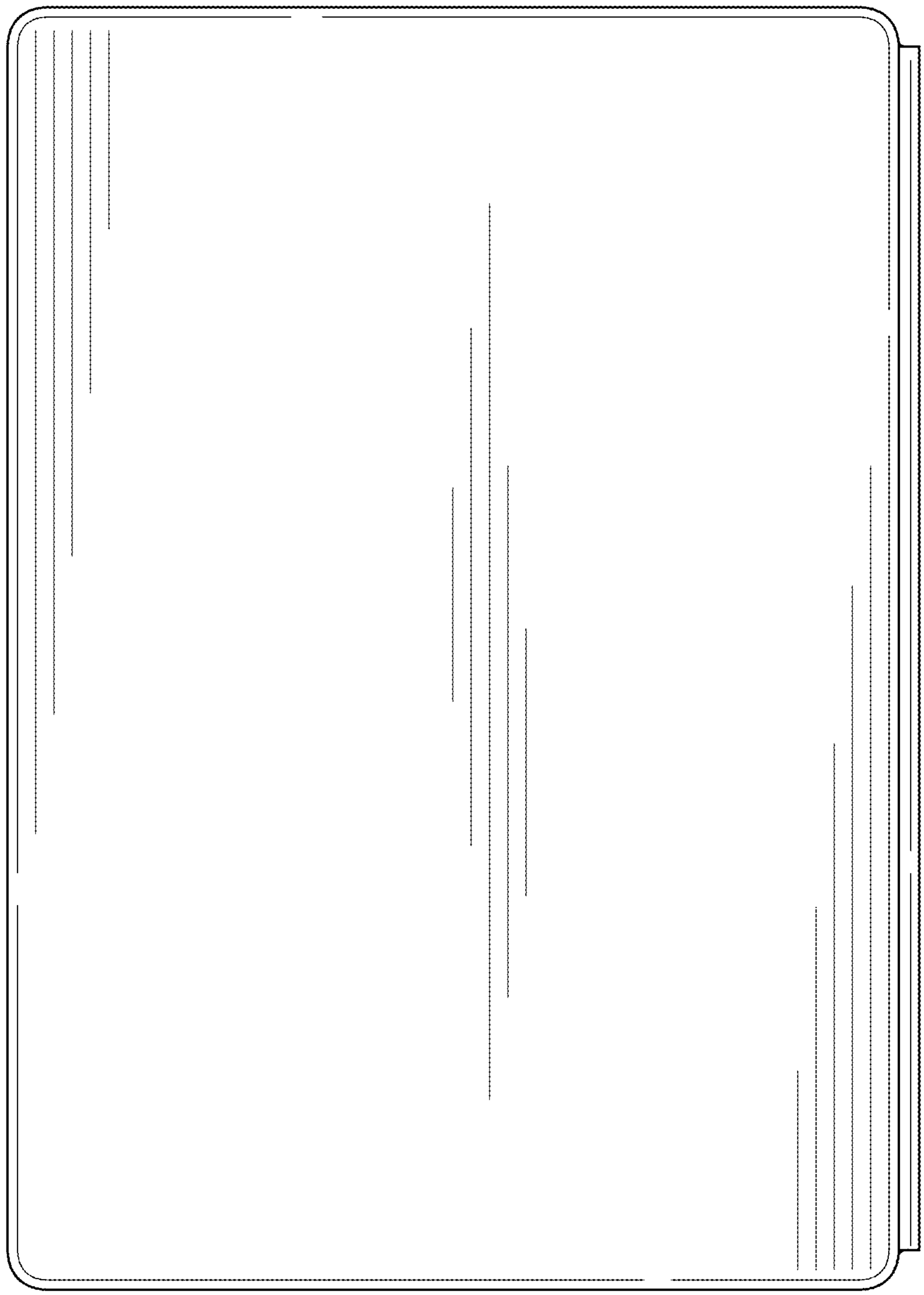

FIG. 3

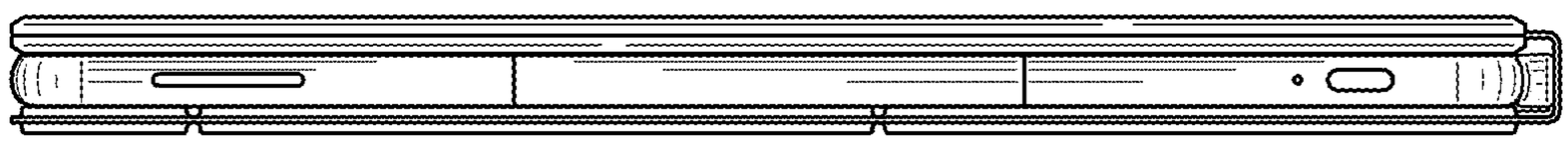

FIG. 5

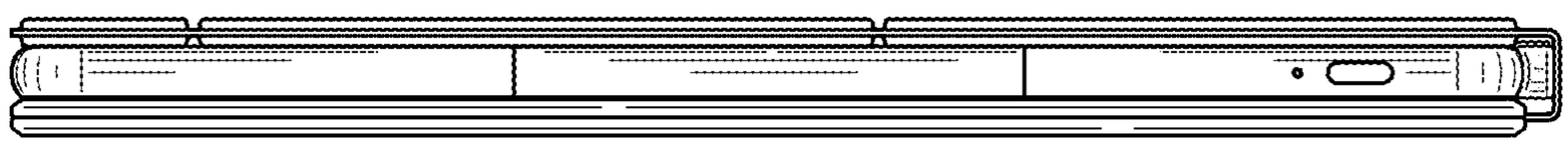

FIG. 4

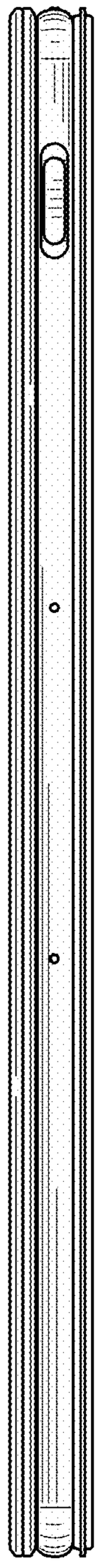

FIG. 6

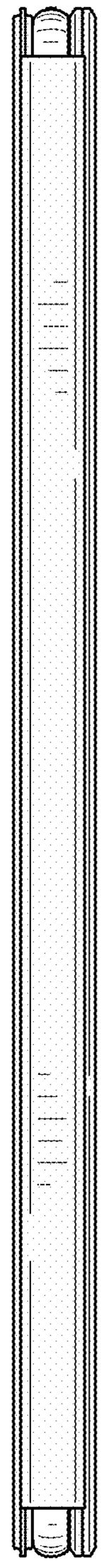

FIG. 7

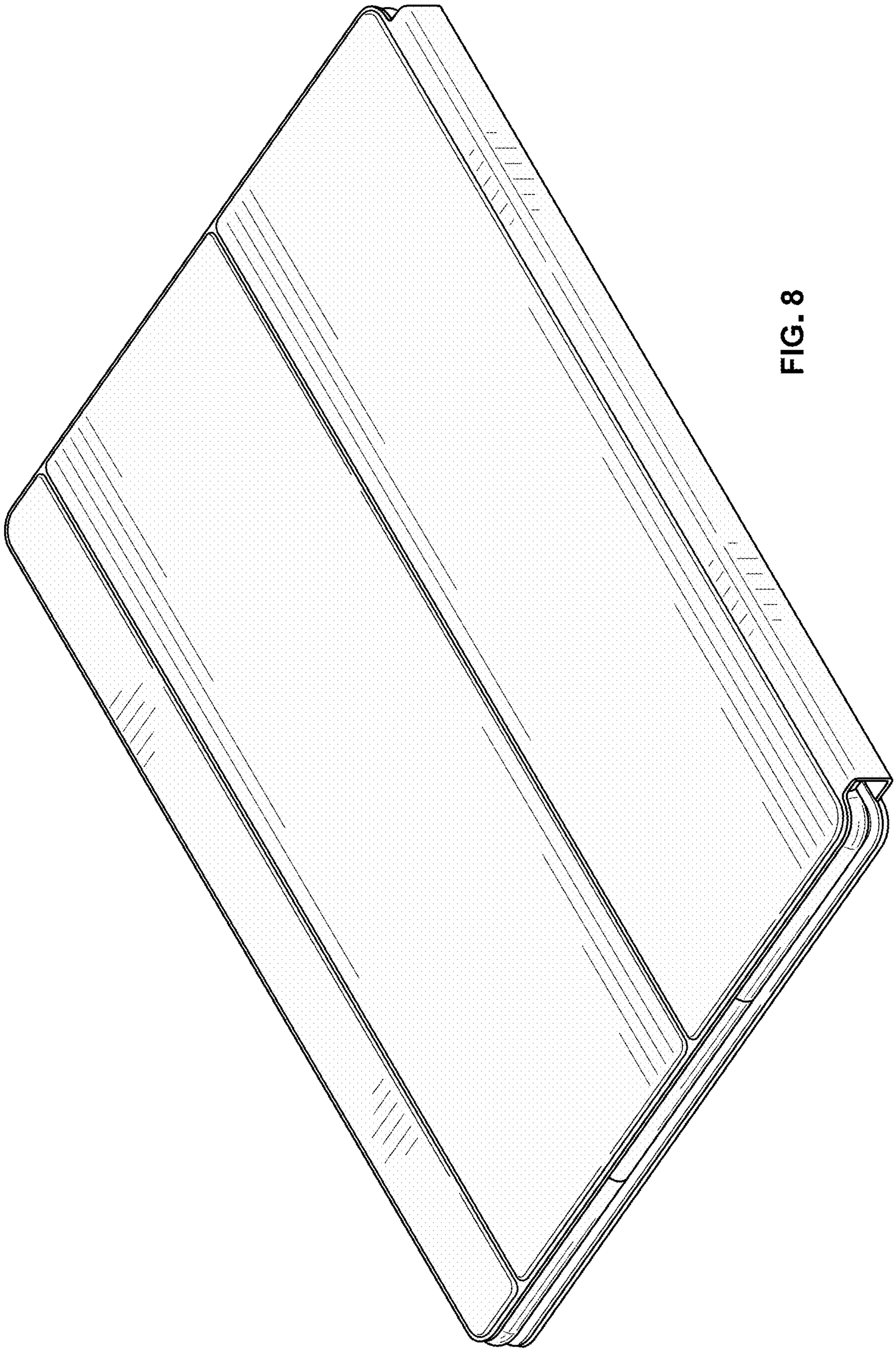

FIG. 8

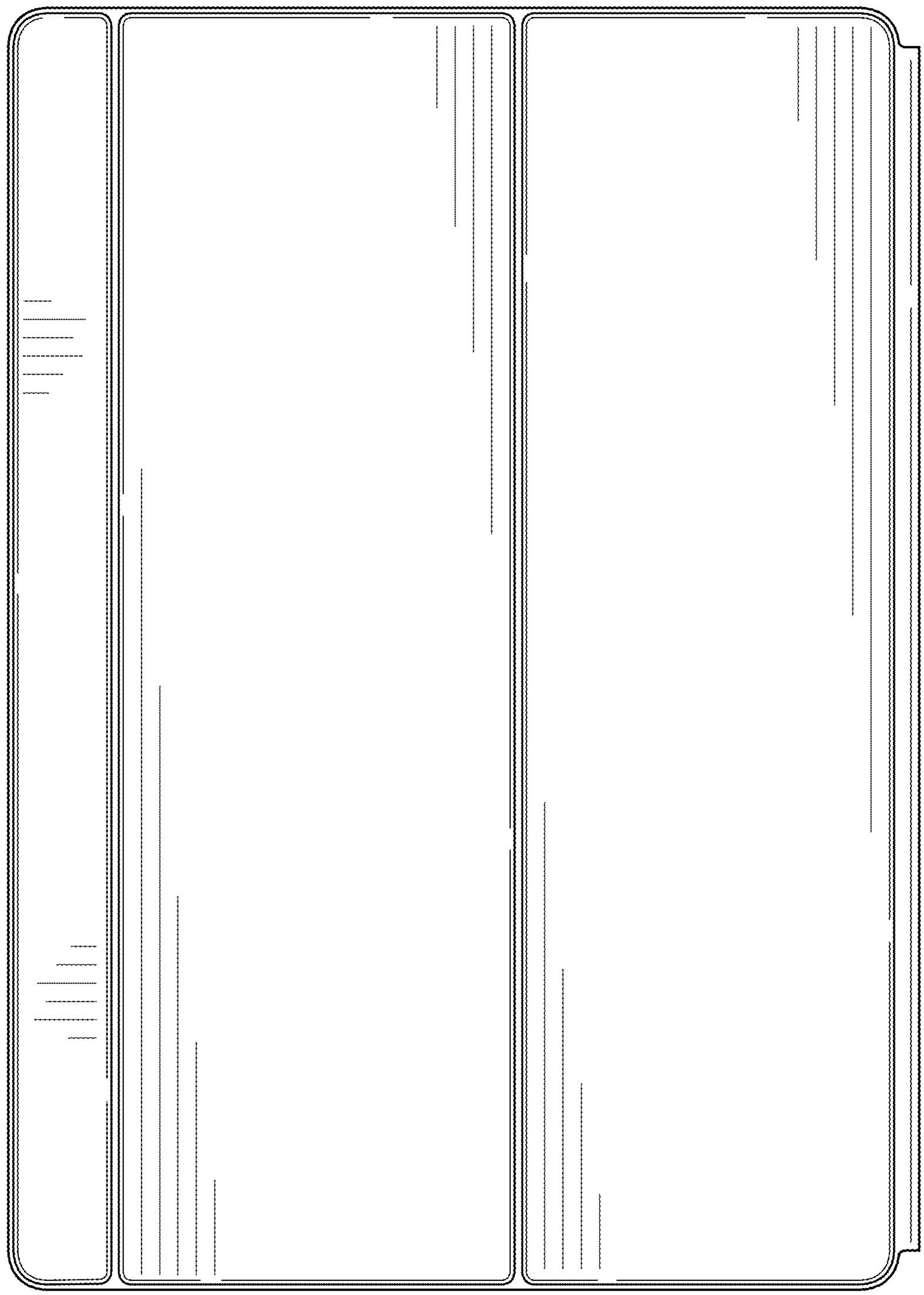

FIG. 9

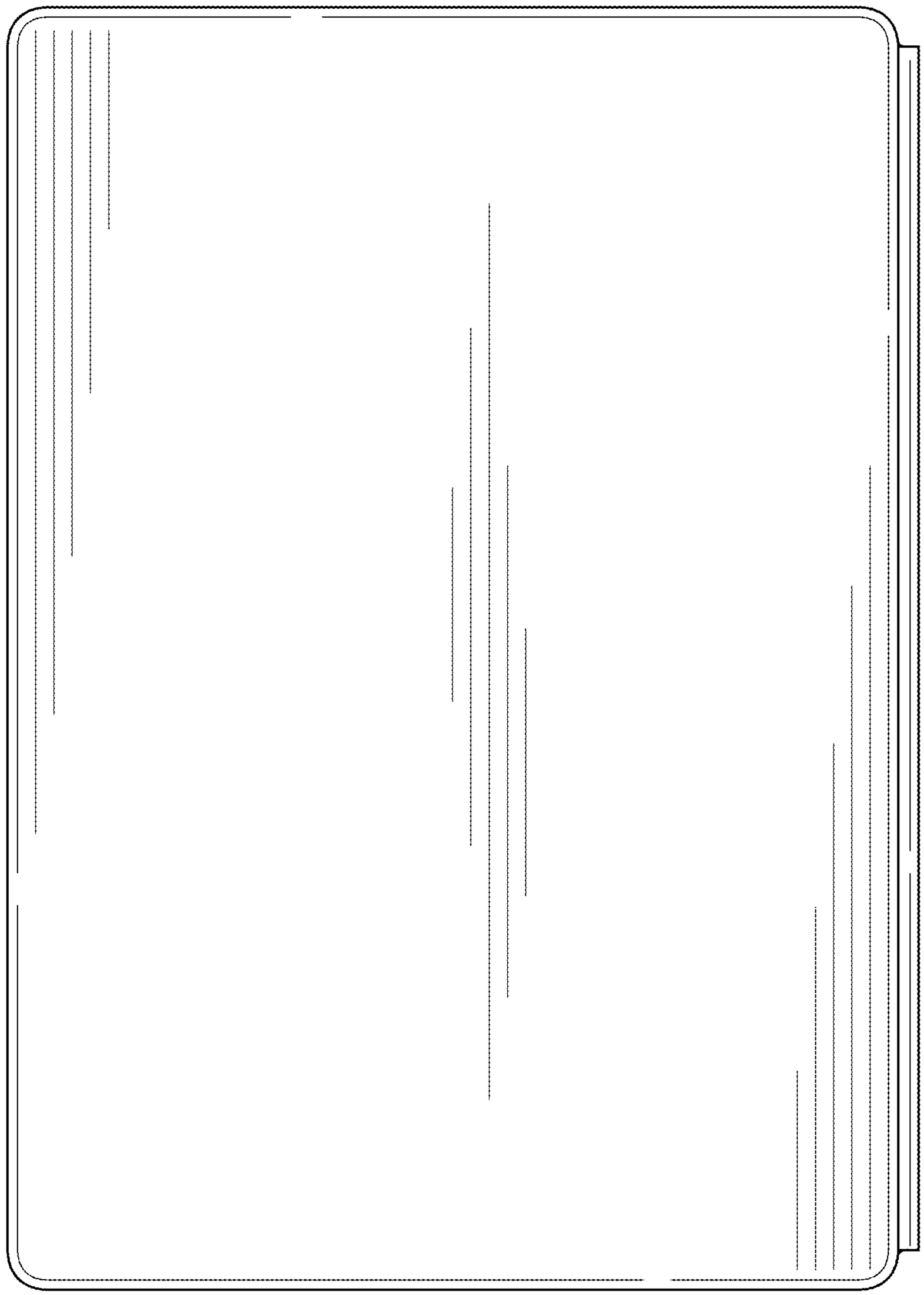

FIG. 10

FIG. 12

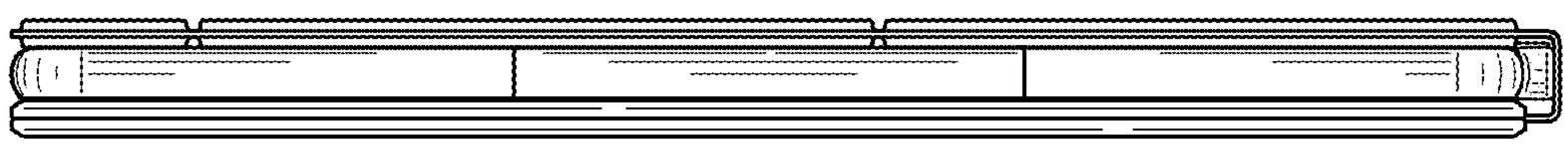

FIG. 11

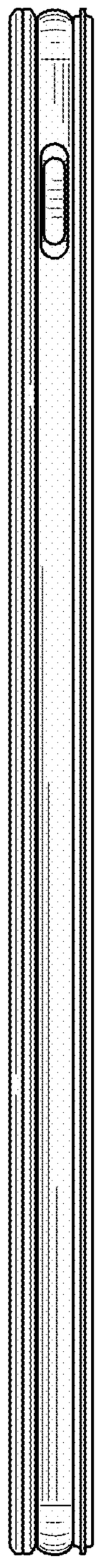

FIG. 13

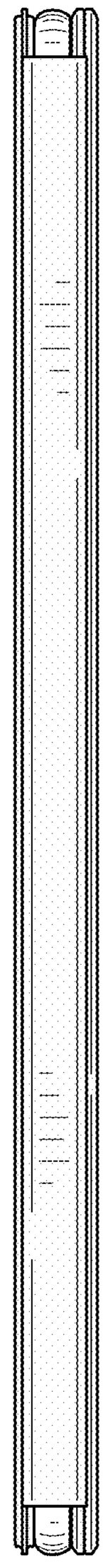

FIG. 14

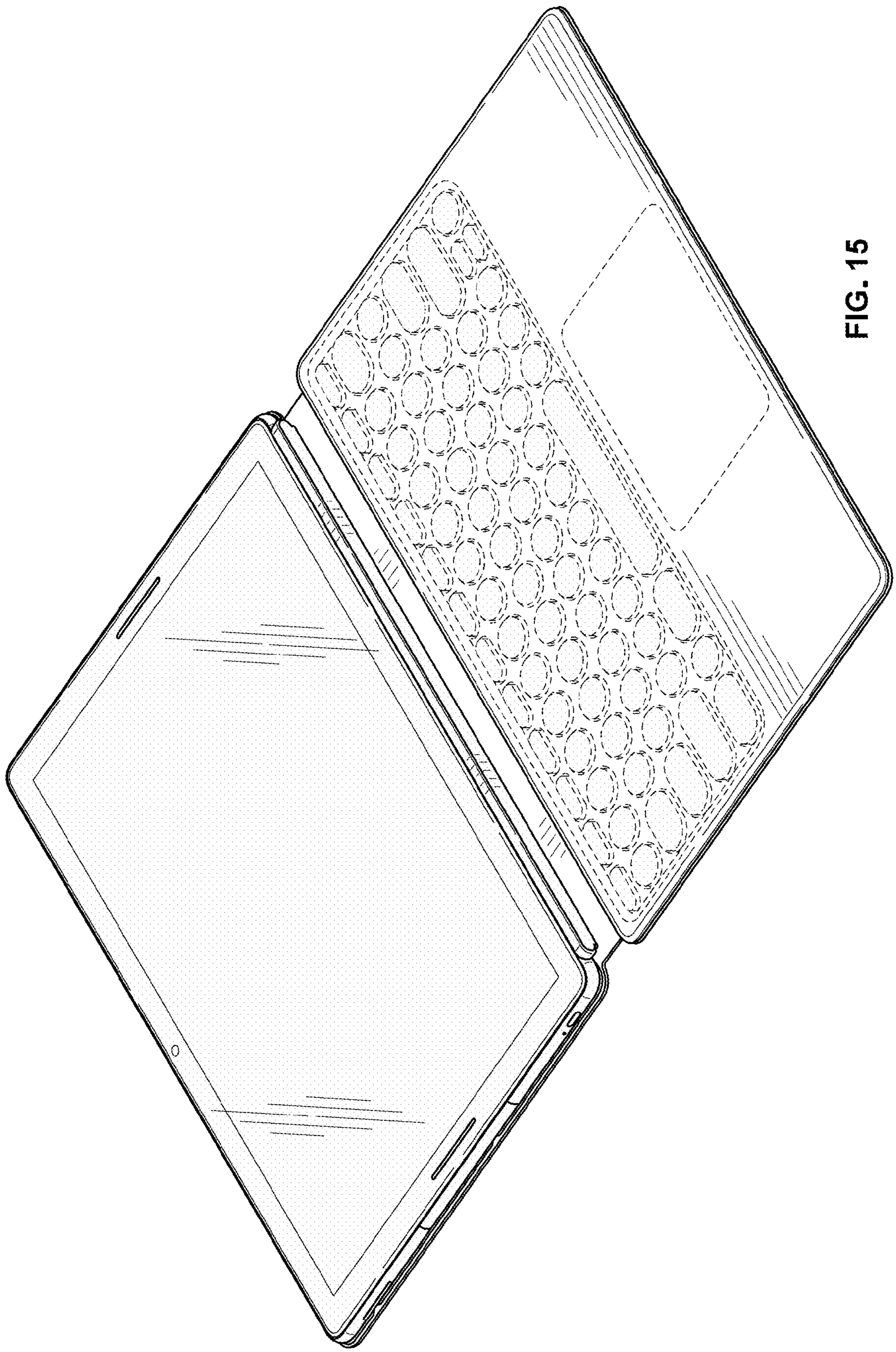

FIG. 15

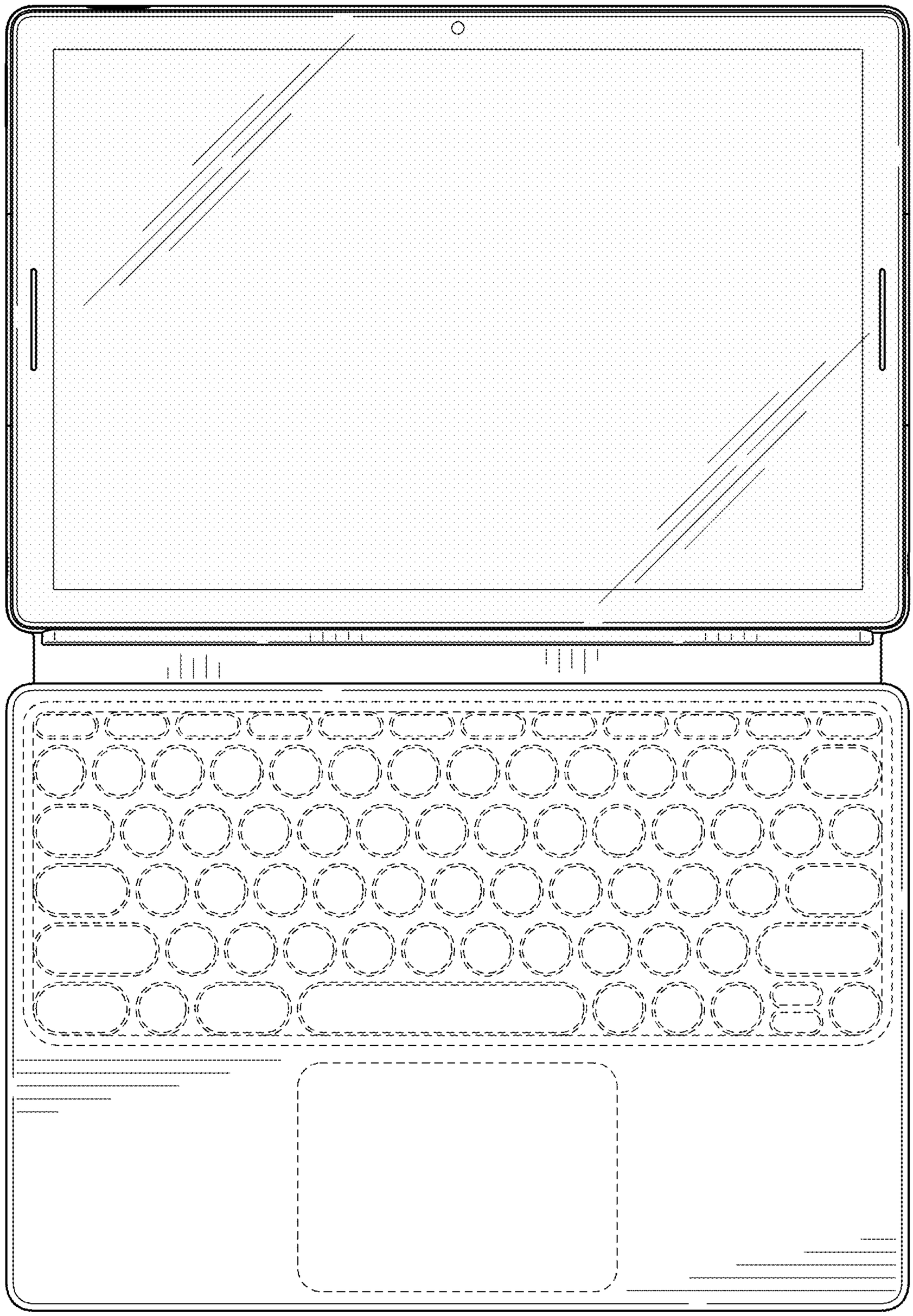

FIG. 16

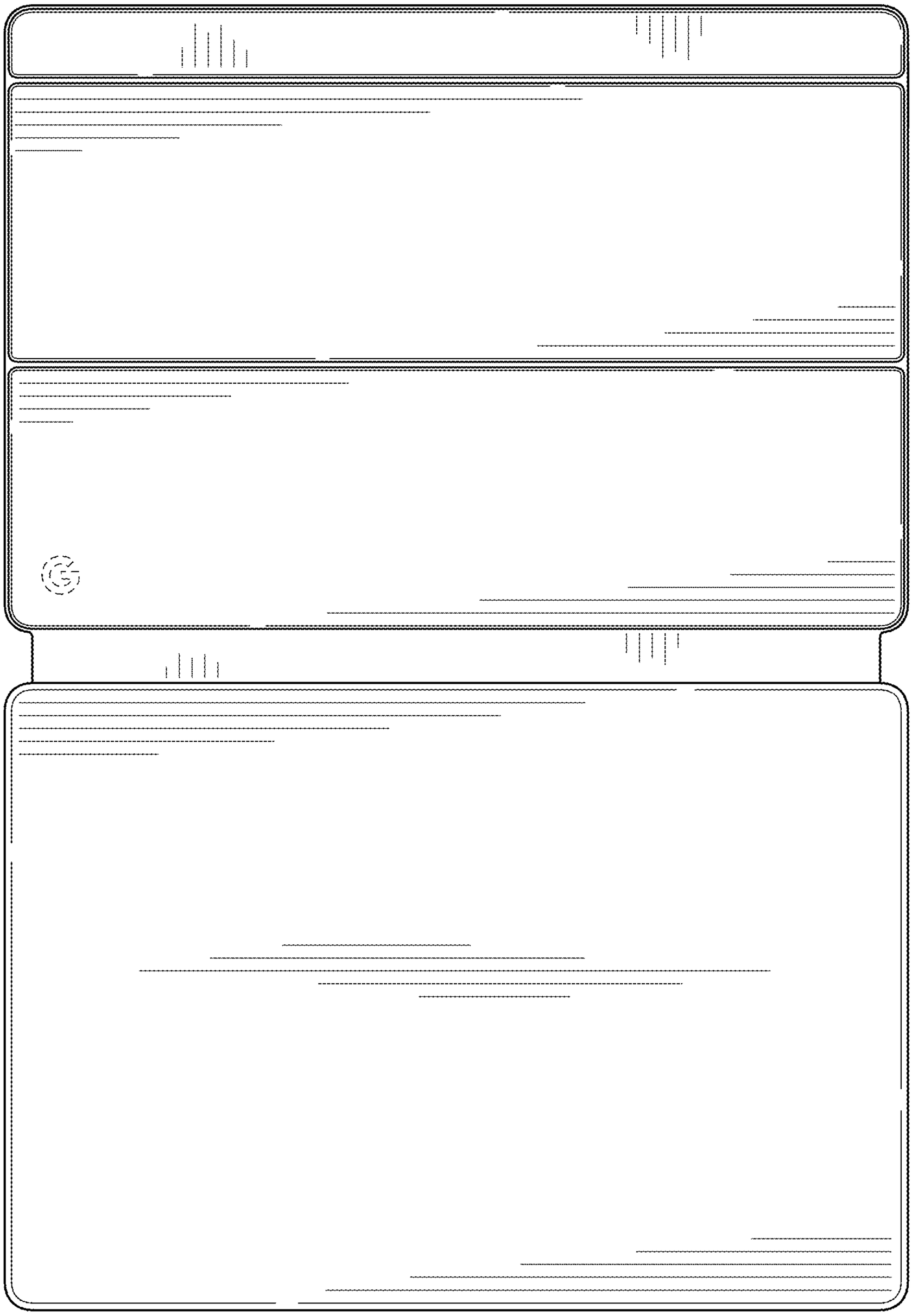

FIG. 17

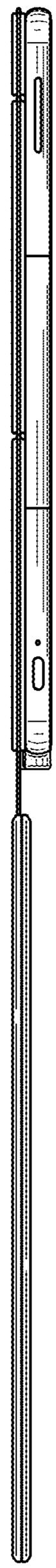

FIG. 18

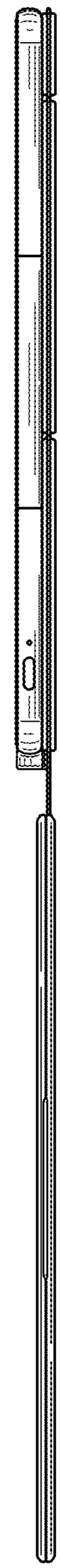

FIG. 19

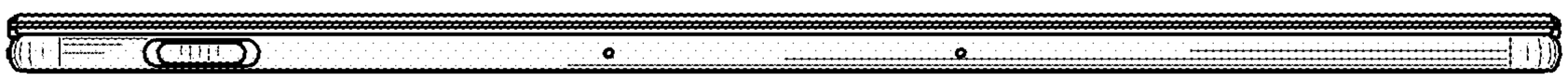

FIG. 20

FIG. 21

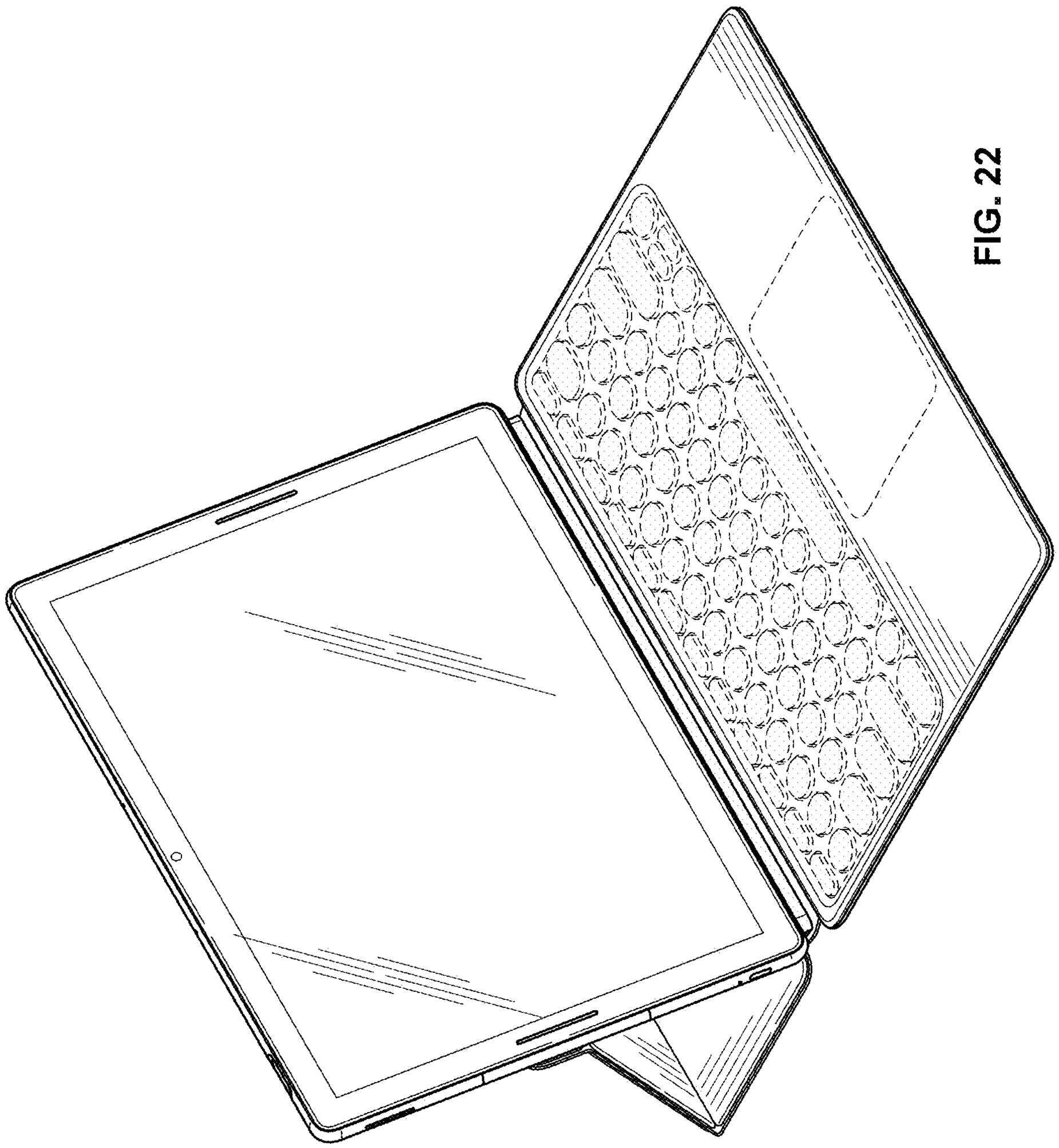

FIG. 22

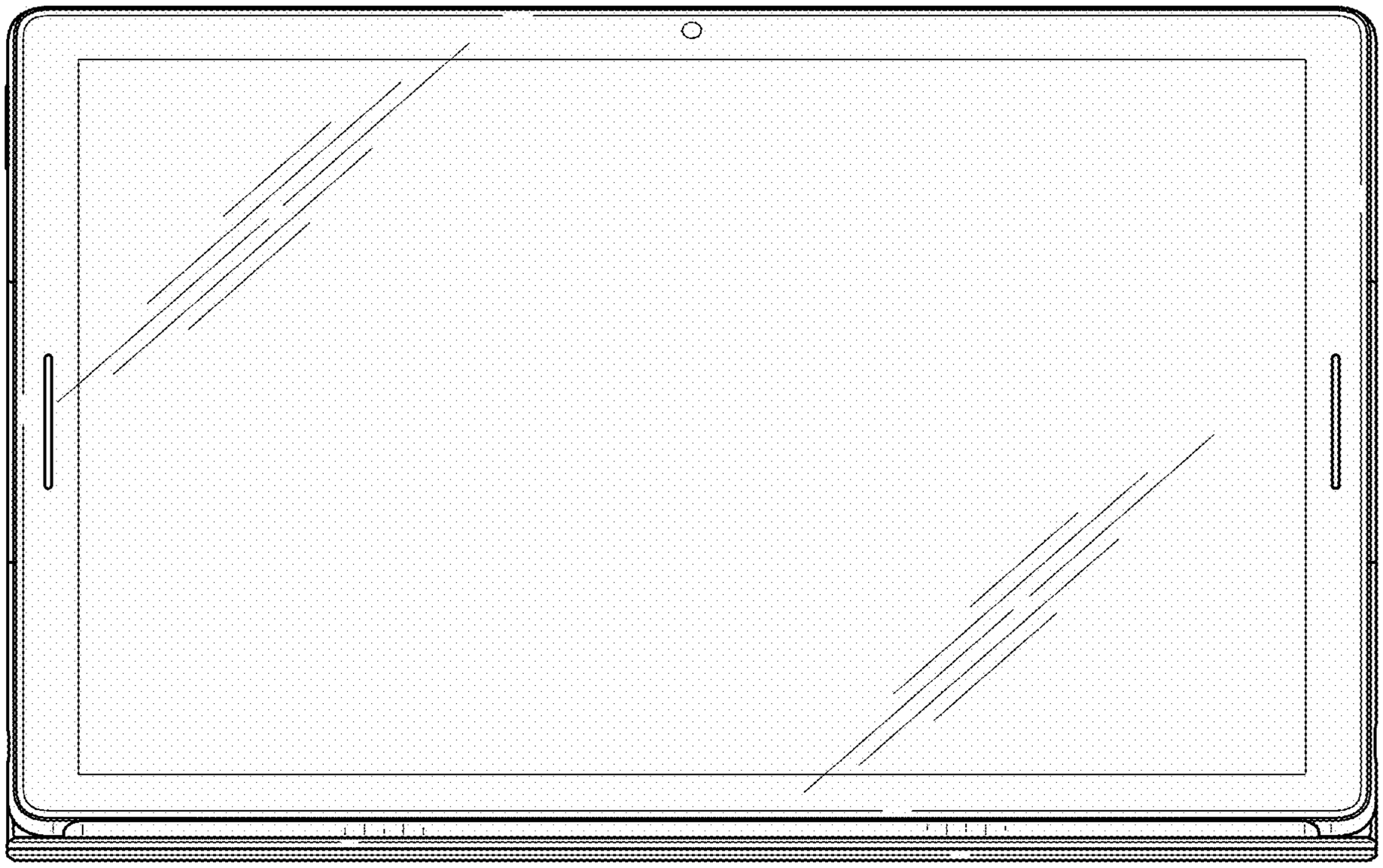

FIG. 23

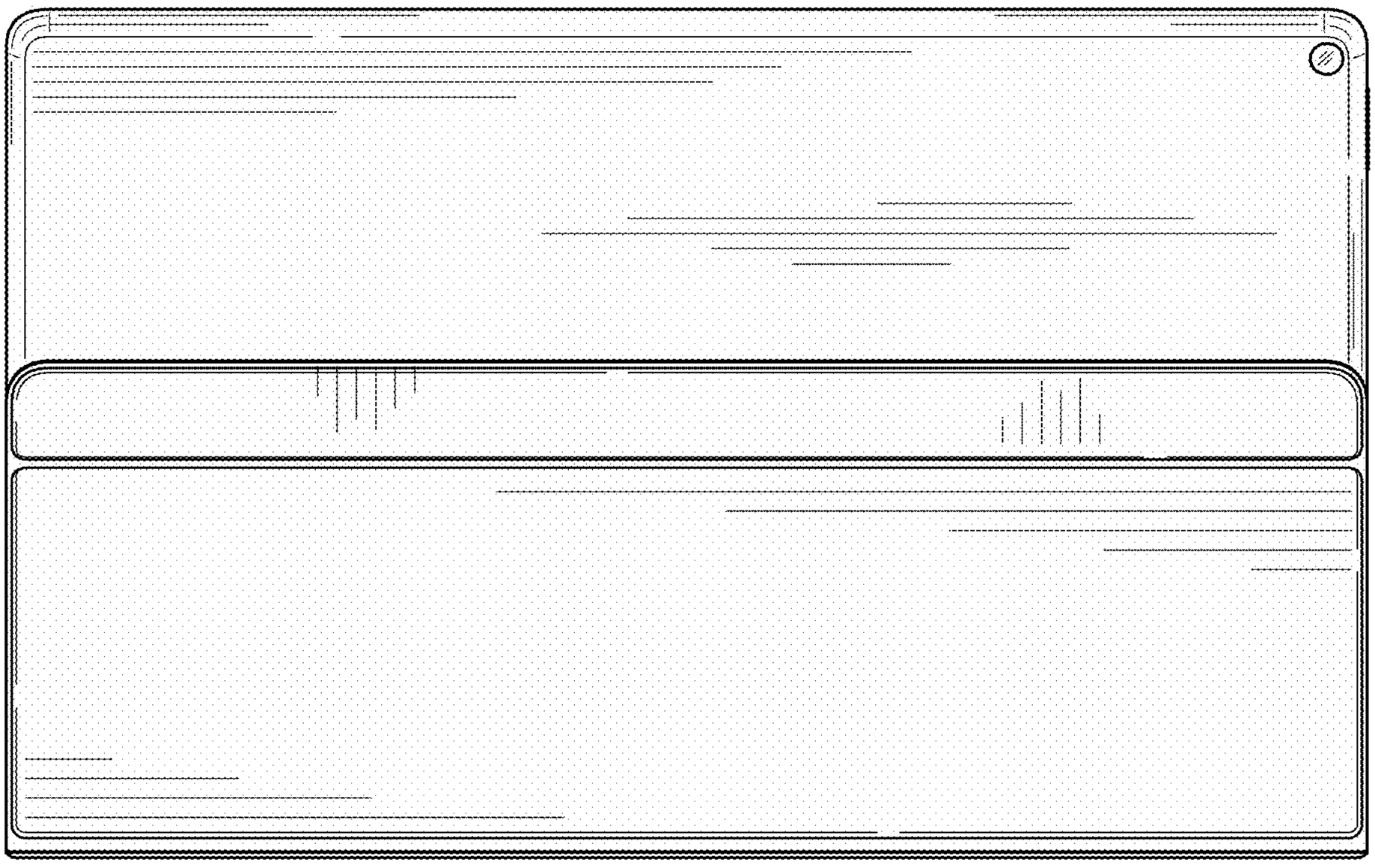

FIG. 24

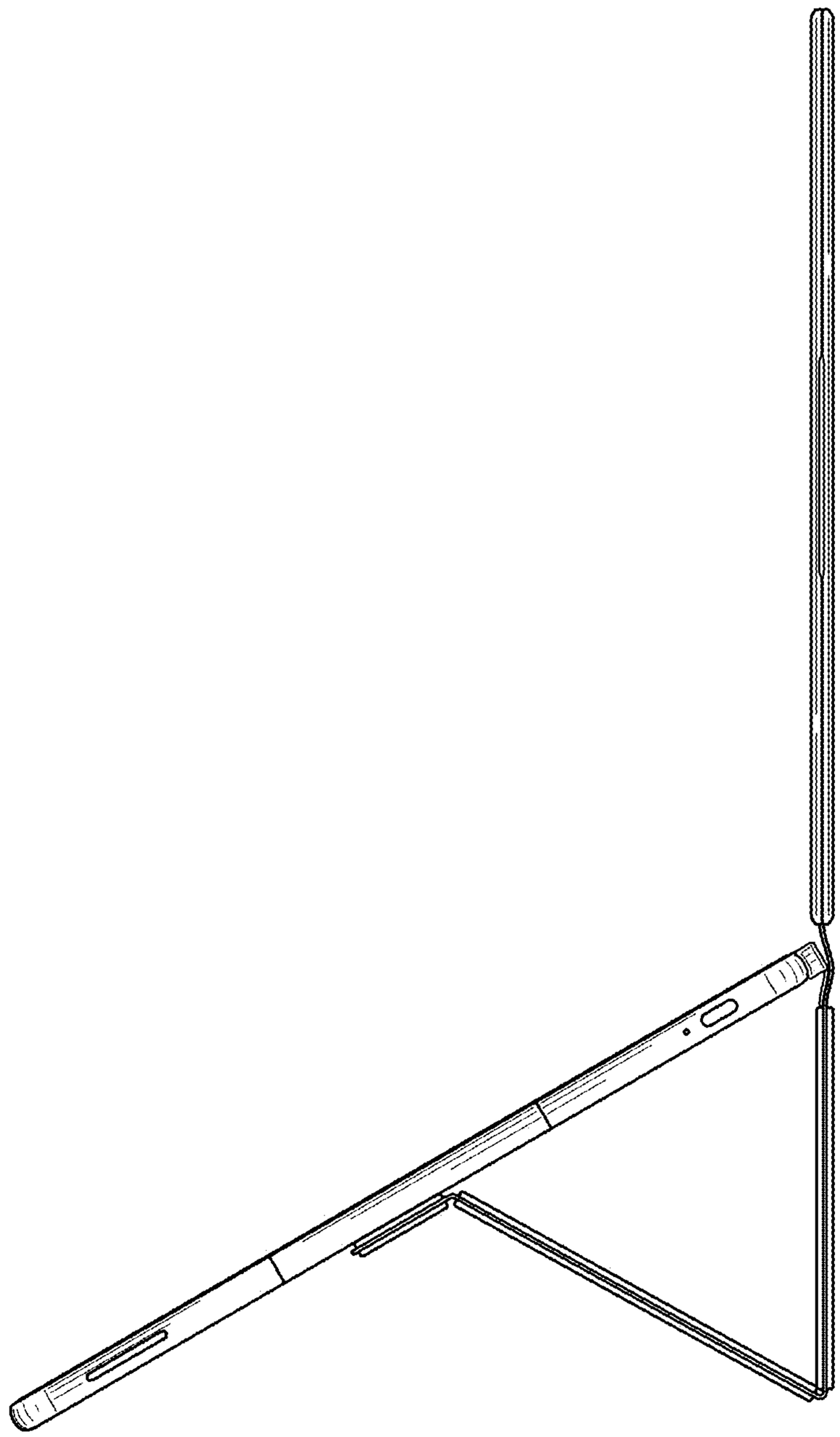

FIG. 25

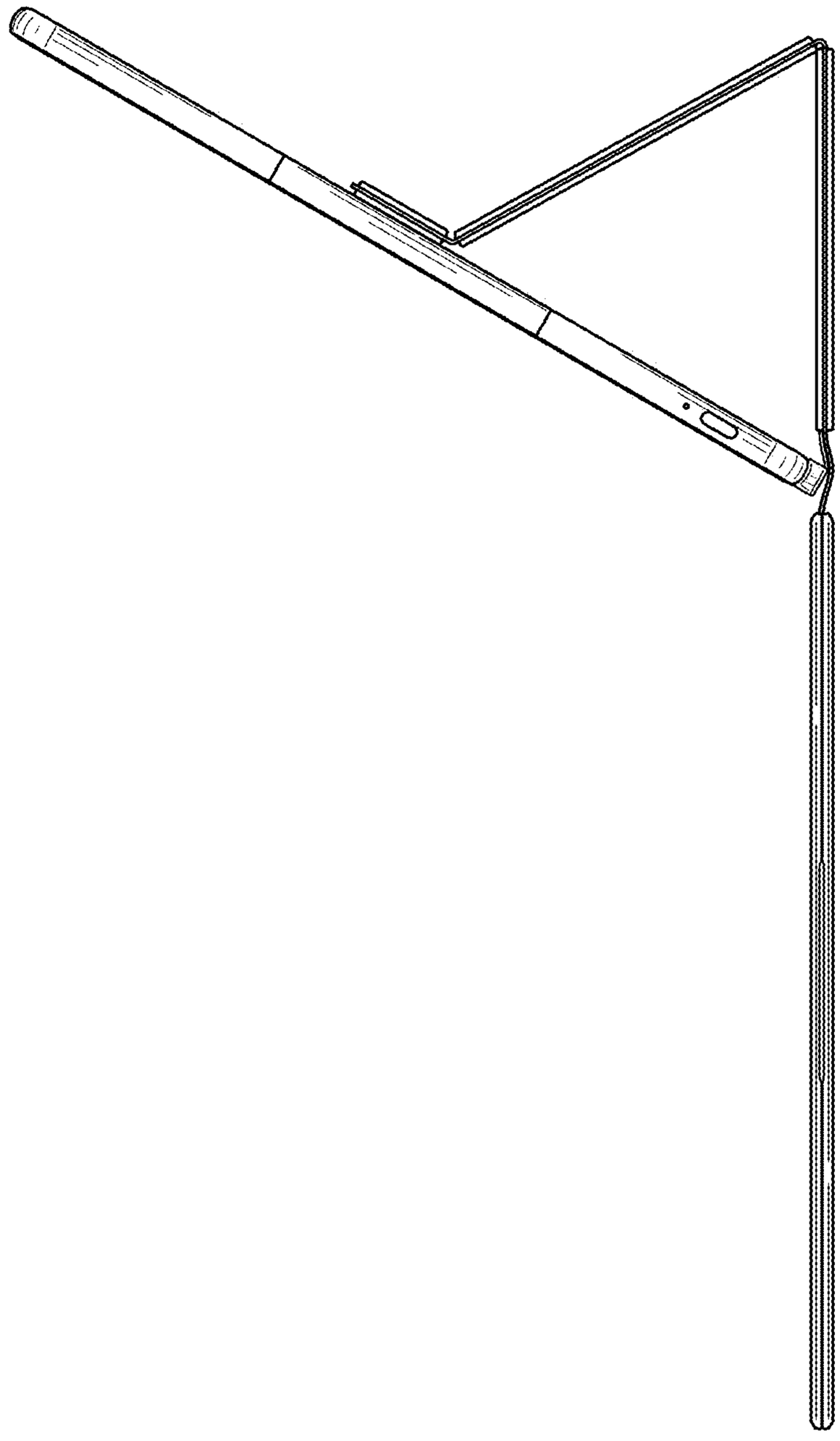

FIG. 26

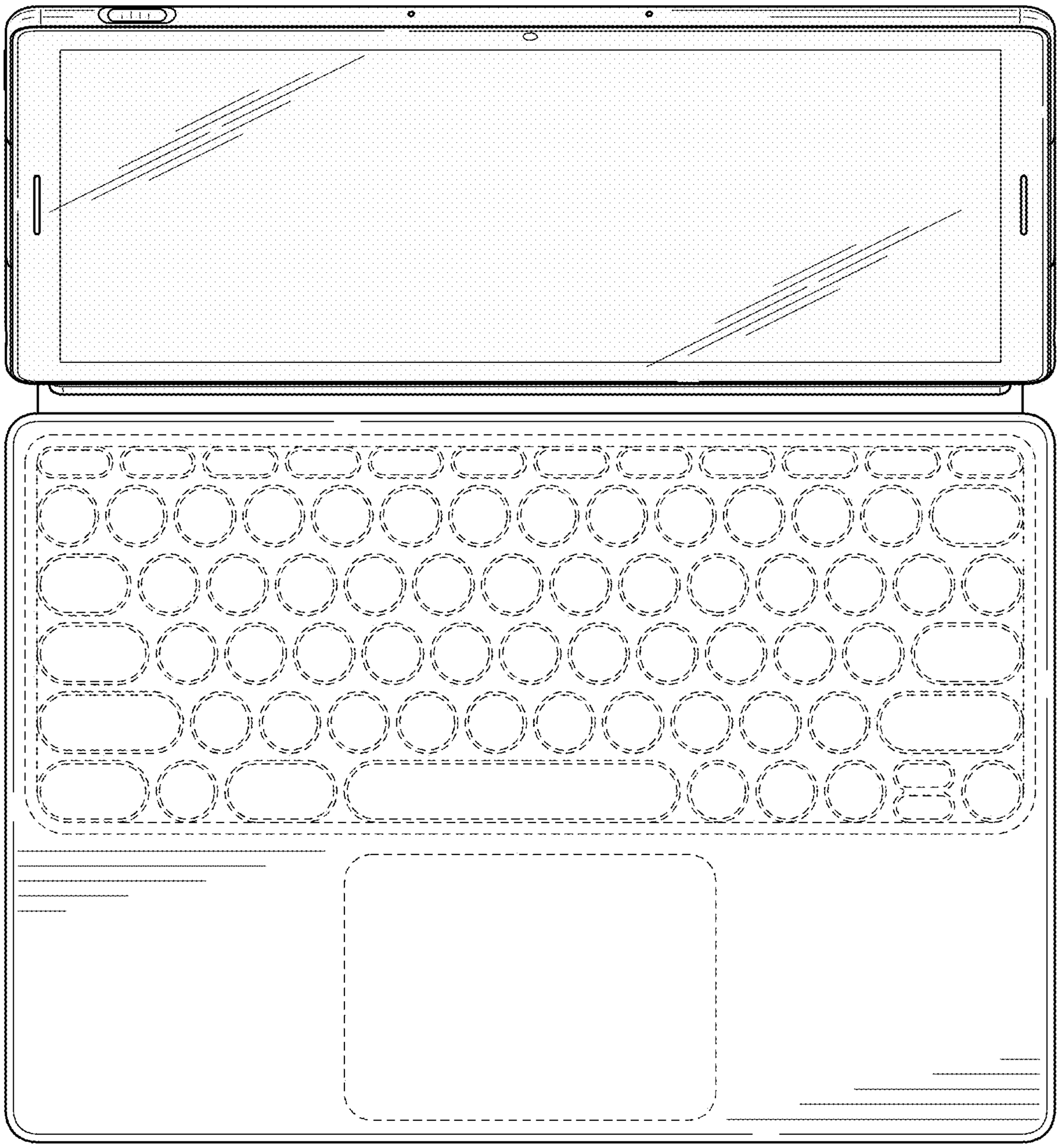

FIG. 27

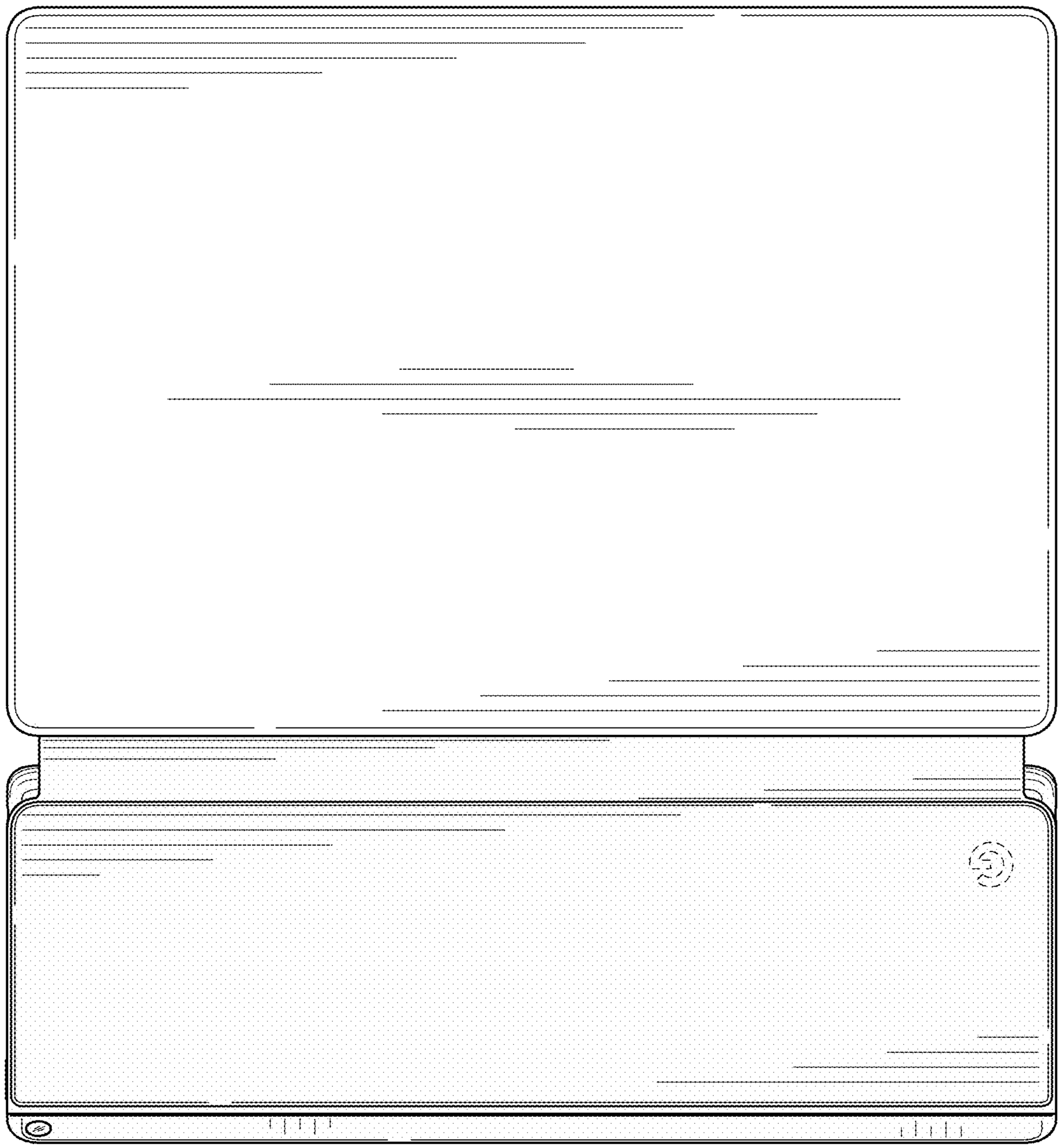

FIG. 28

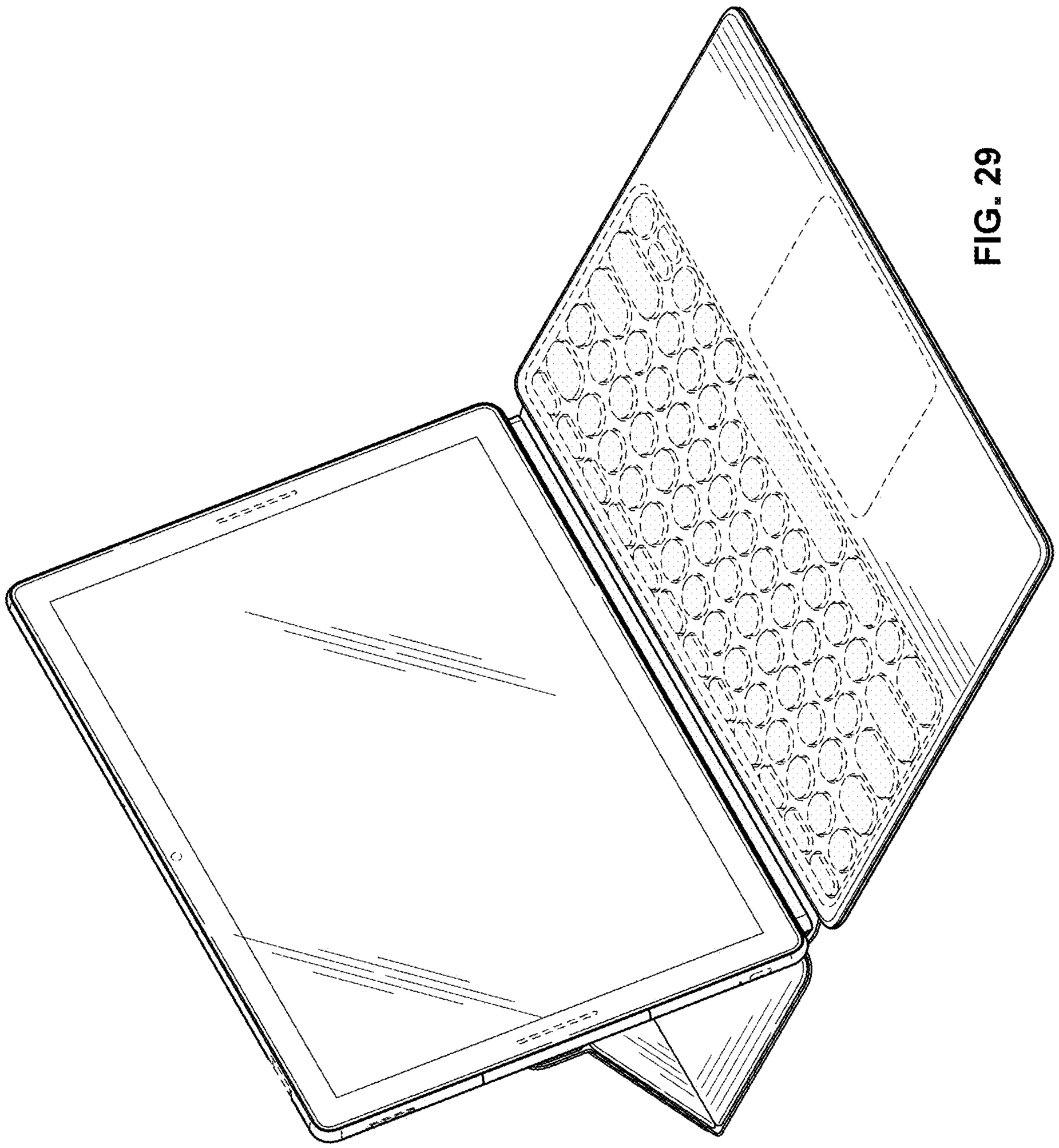

FIG. 29

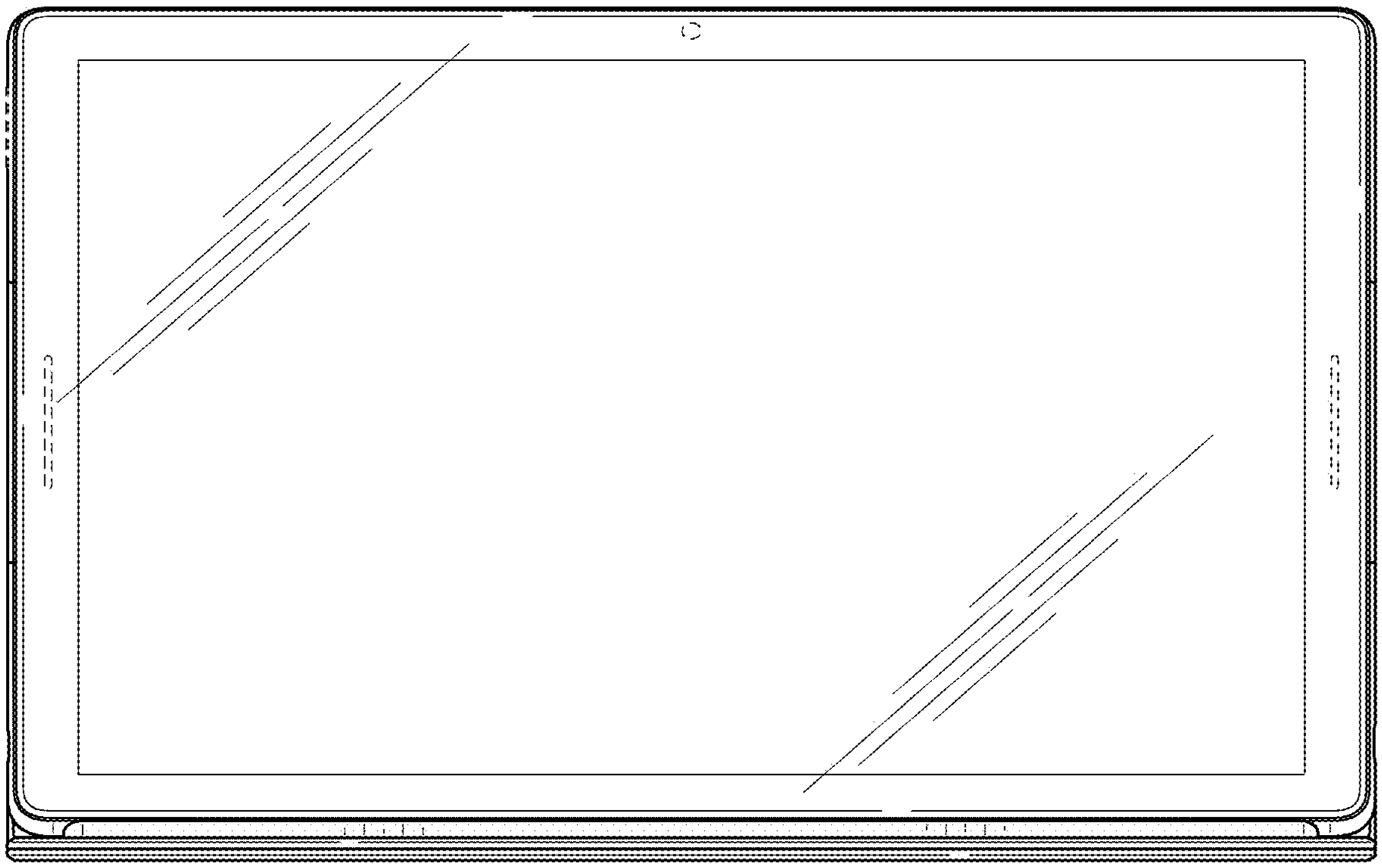

FIG. 30

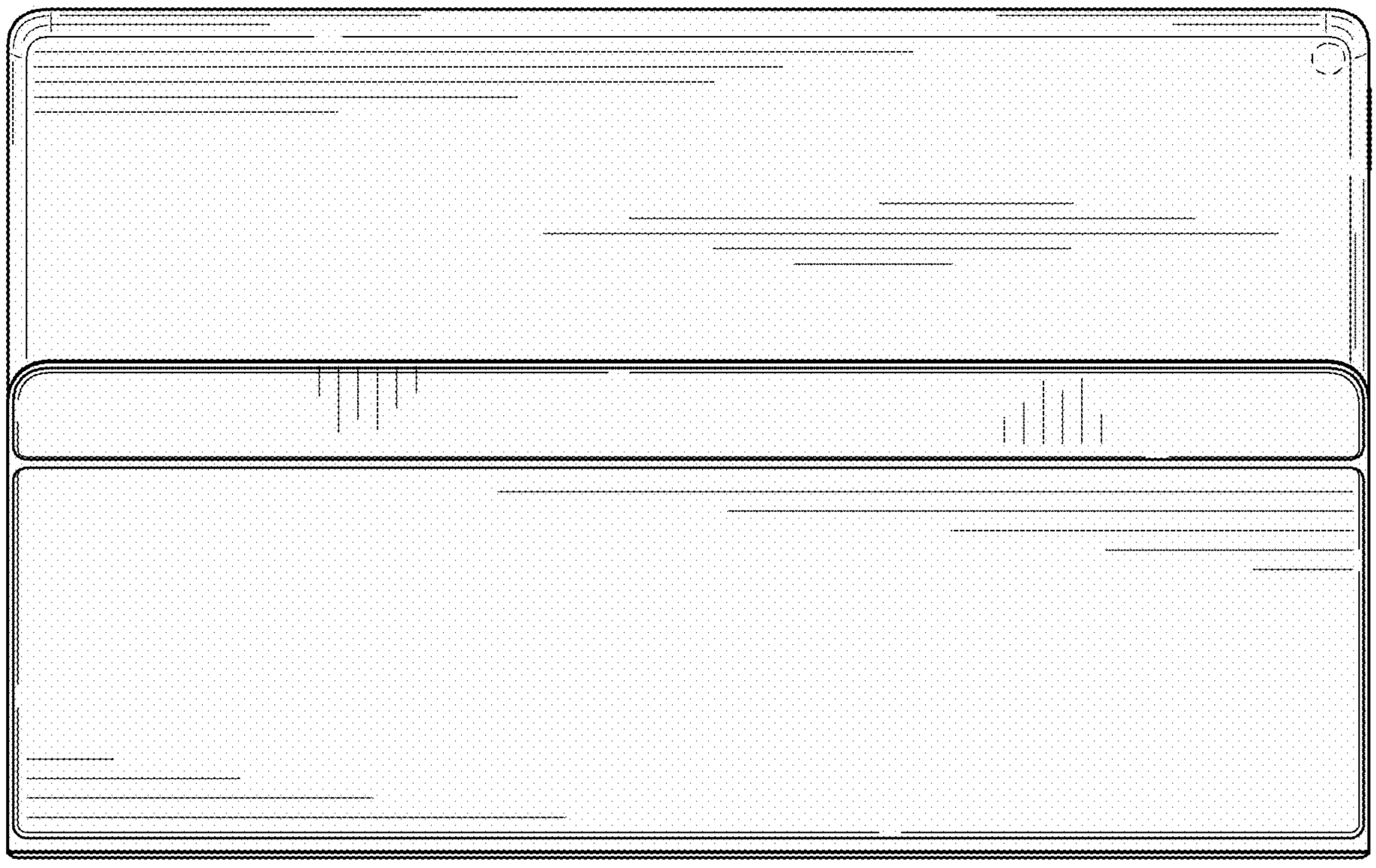

FIG. 31

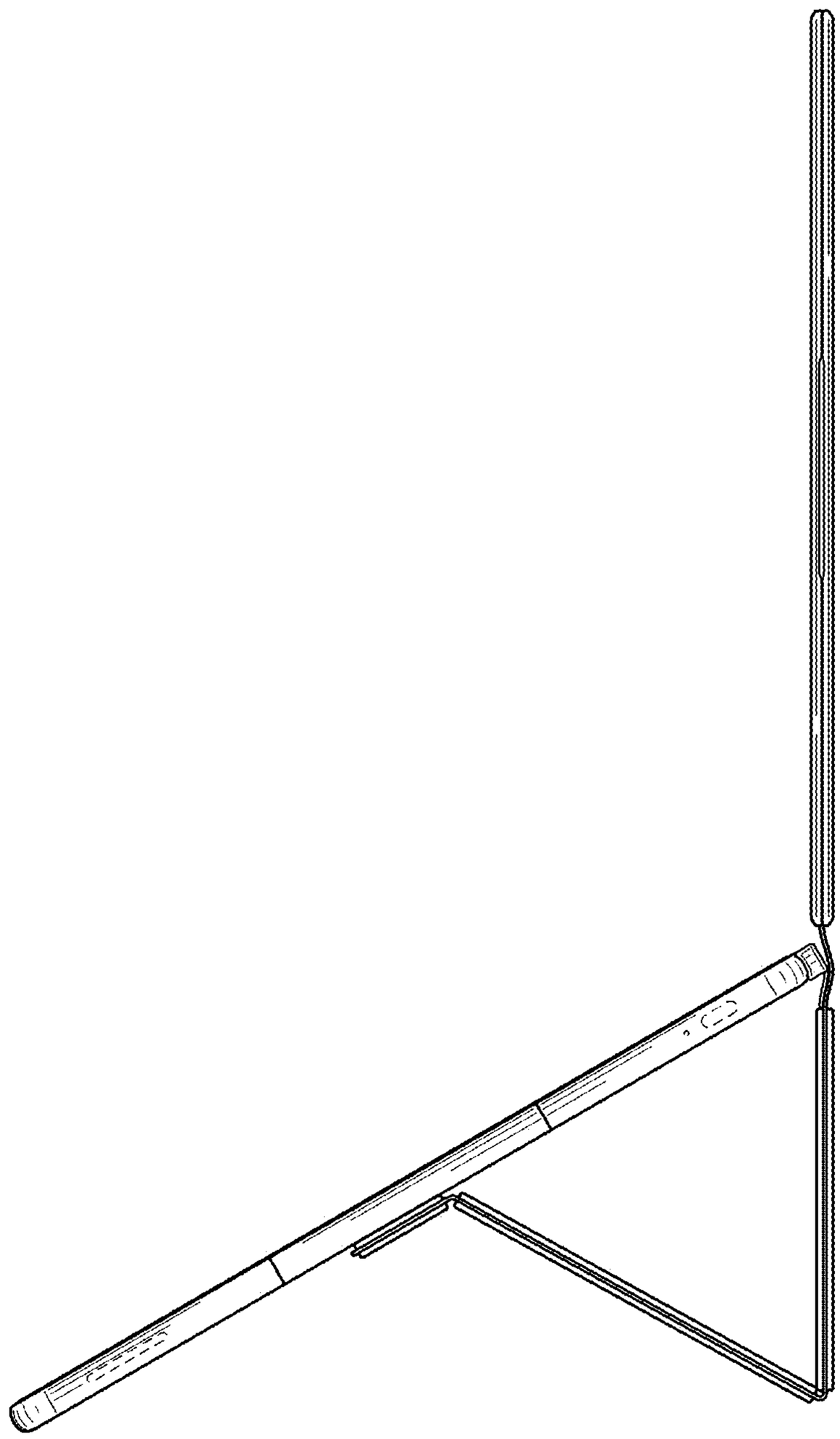

FIG. 32

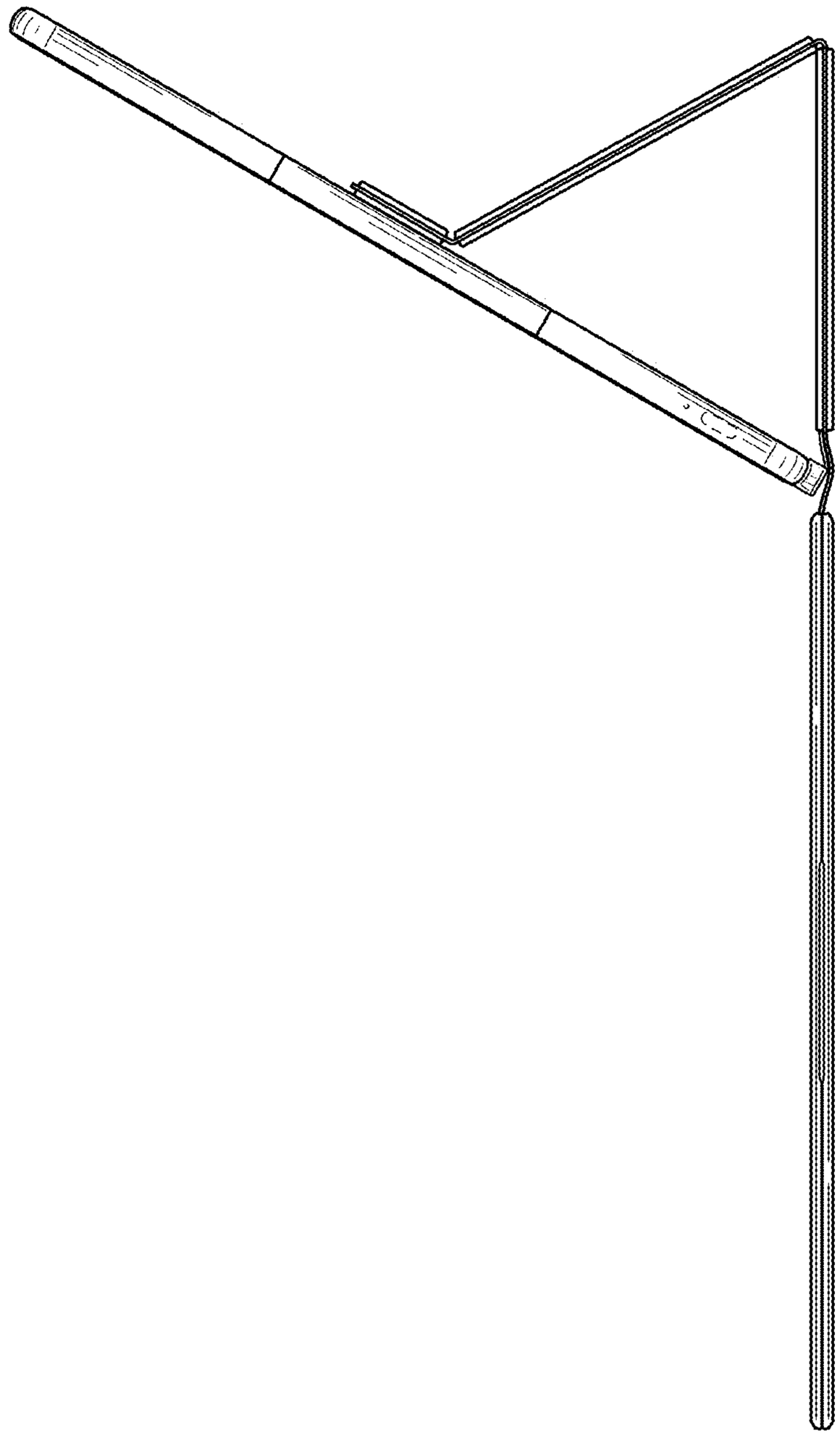

FIG. 33

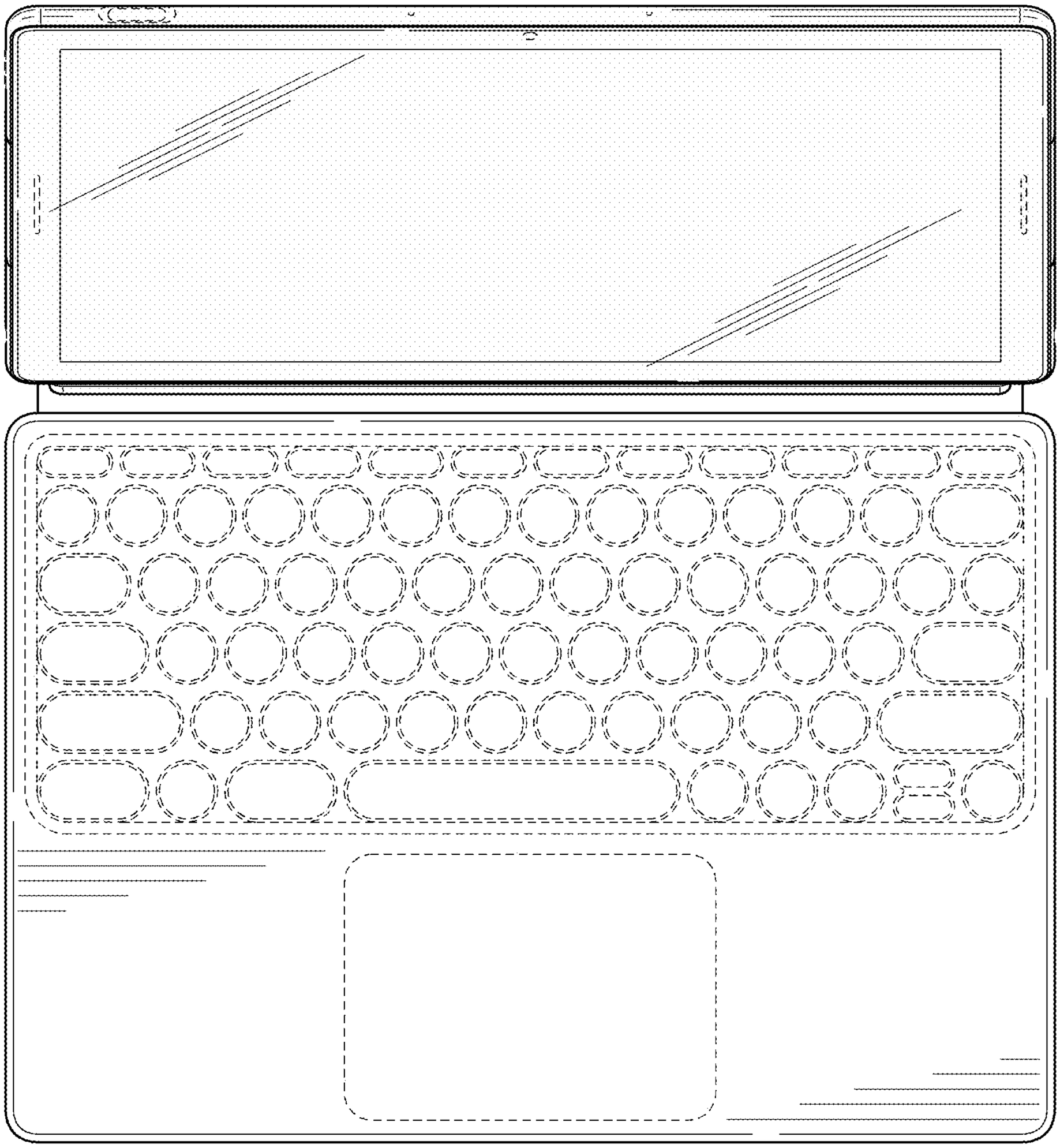

FIG. 34

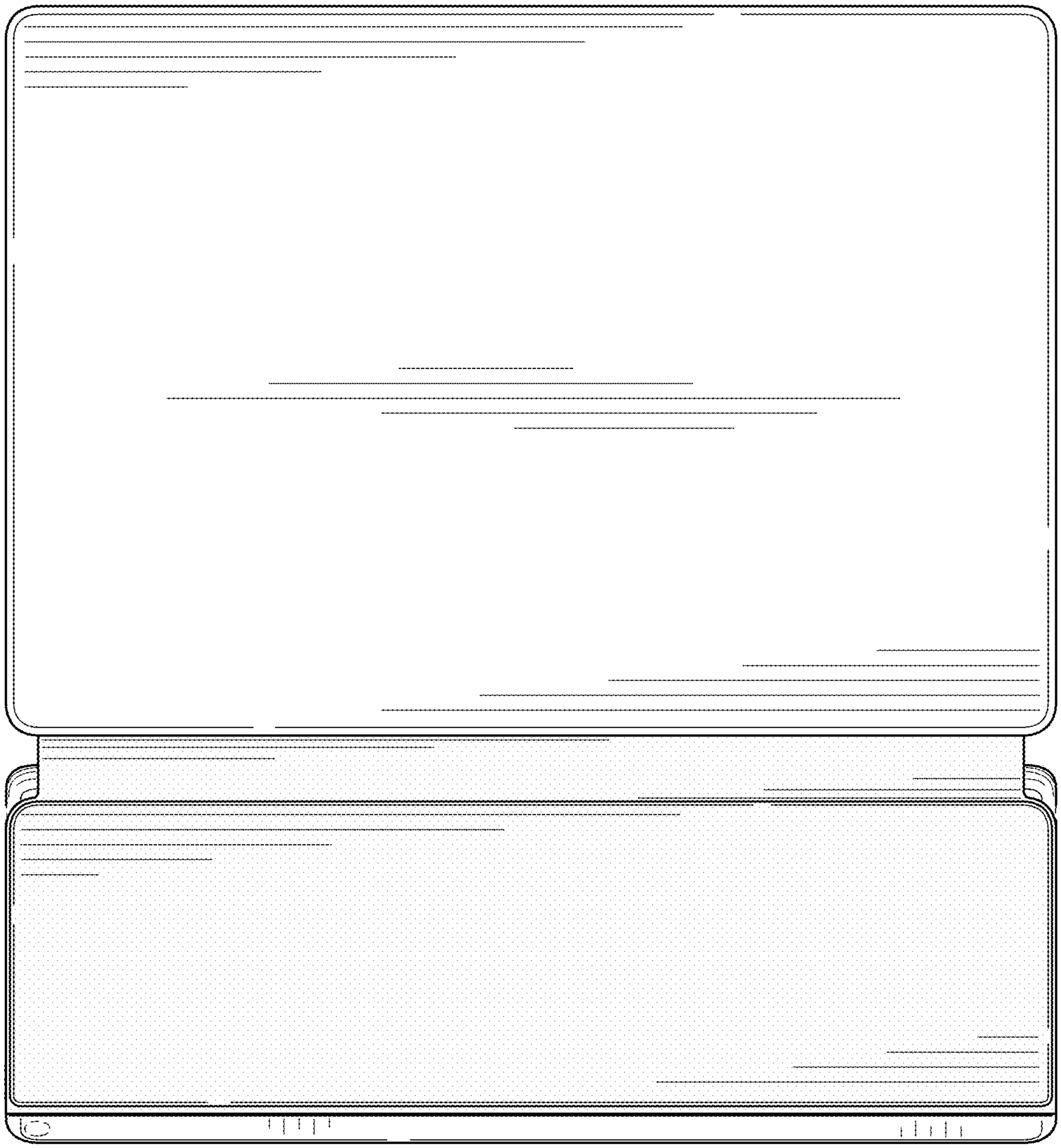

FIG. 35

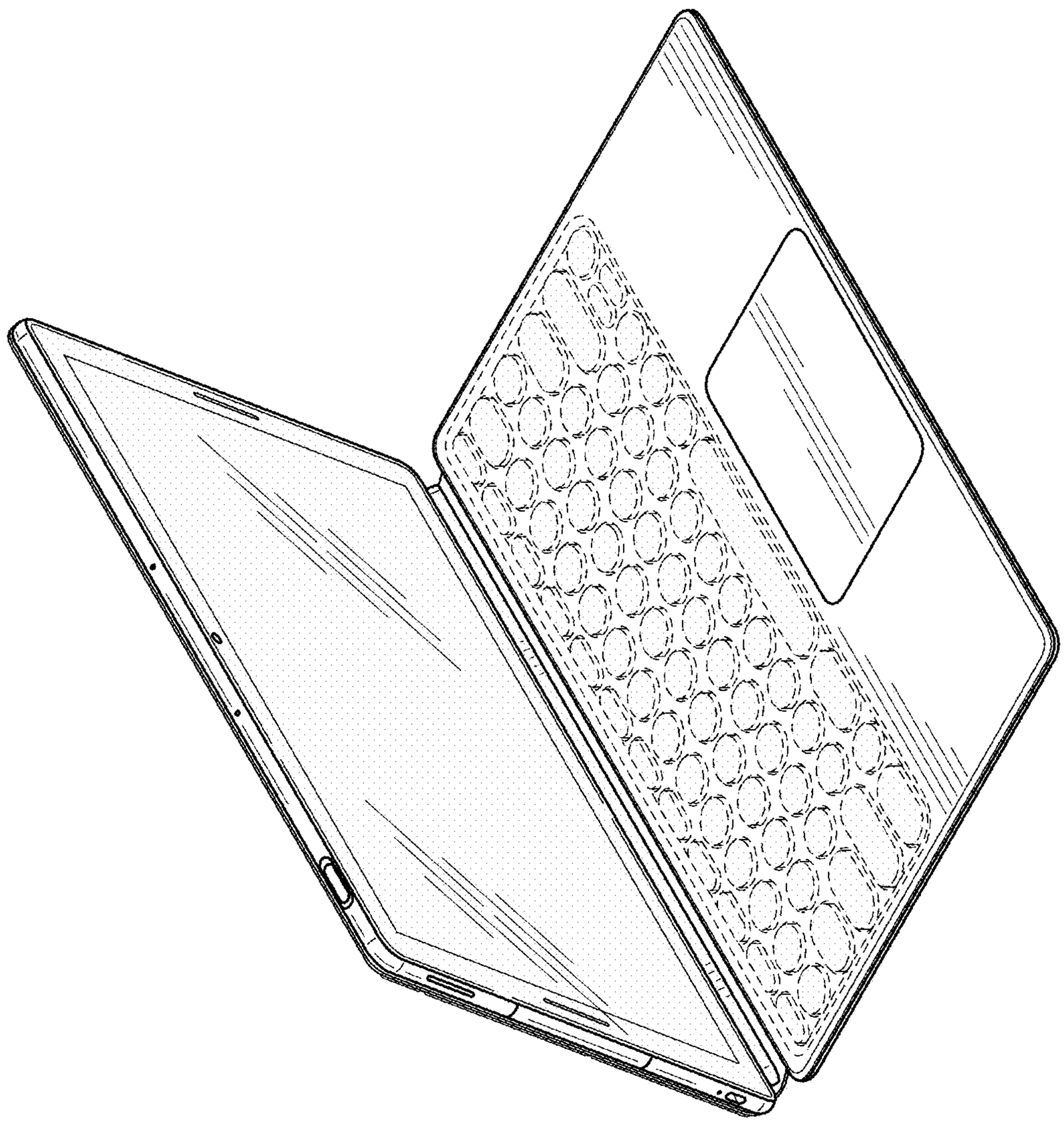

FIG. 36

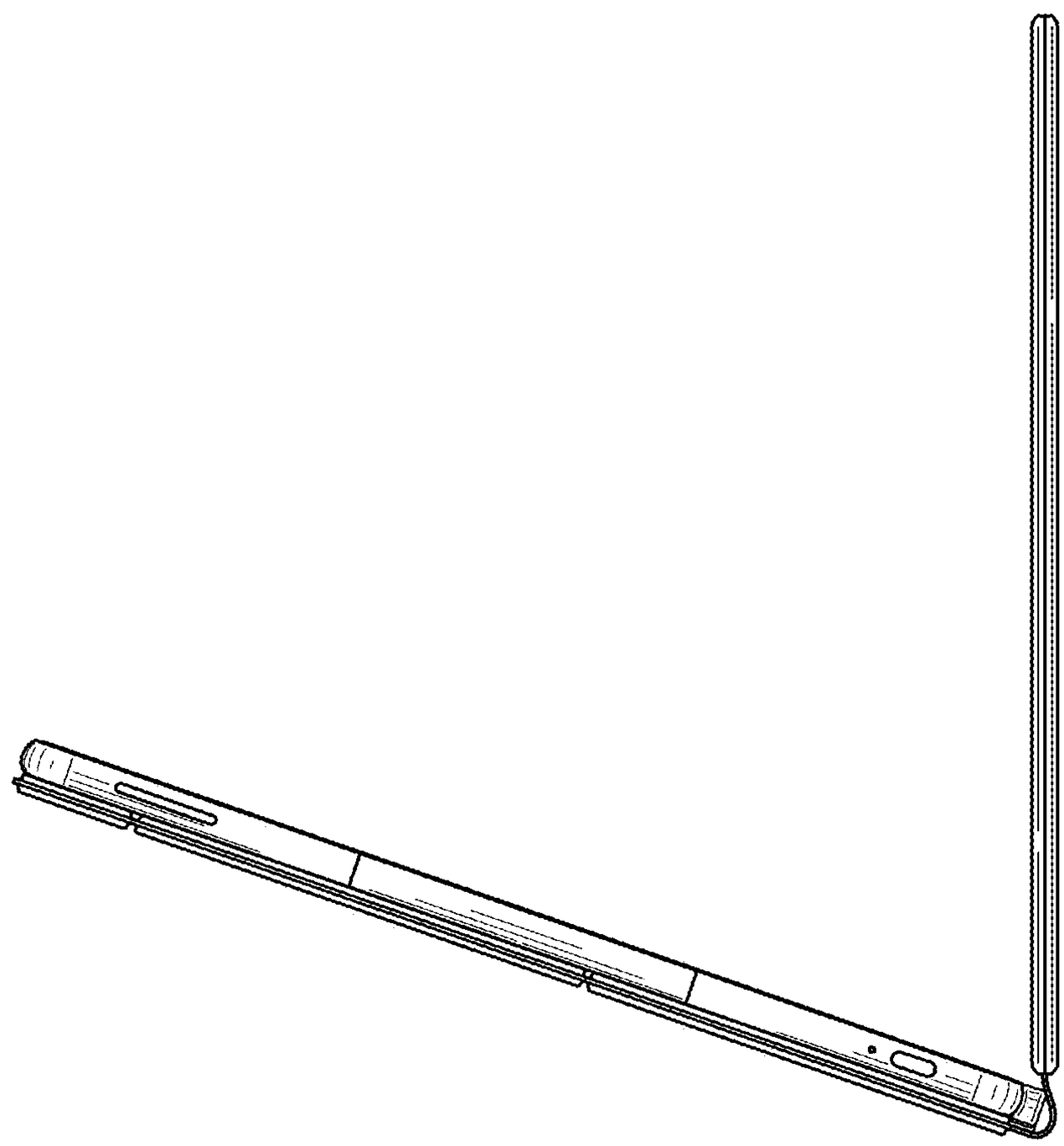

FIG. 37

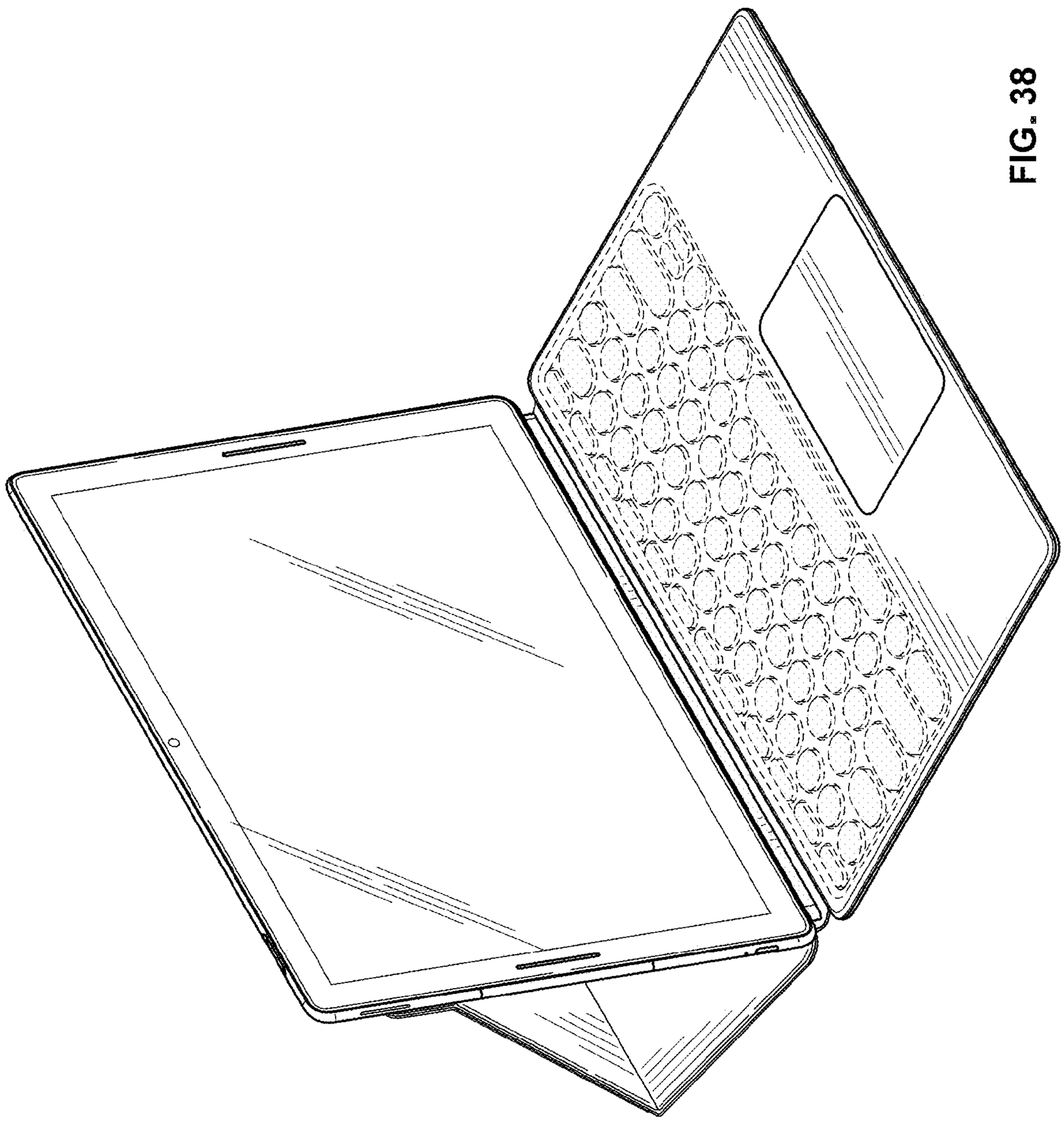

FIG. 38

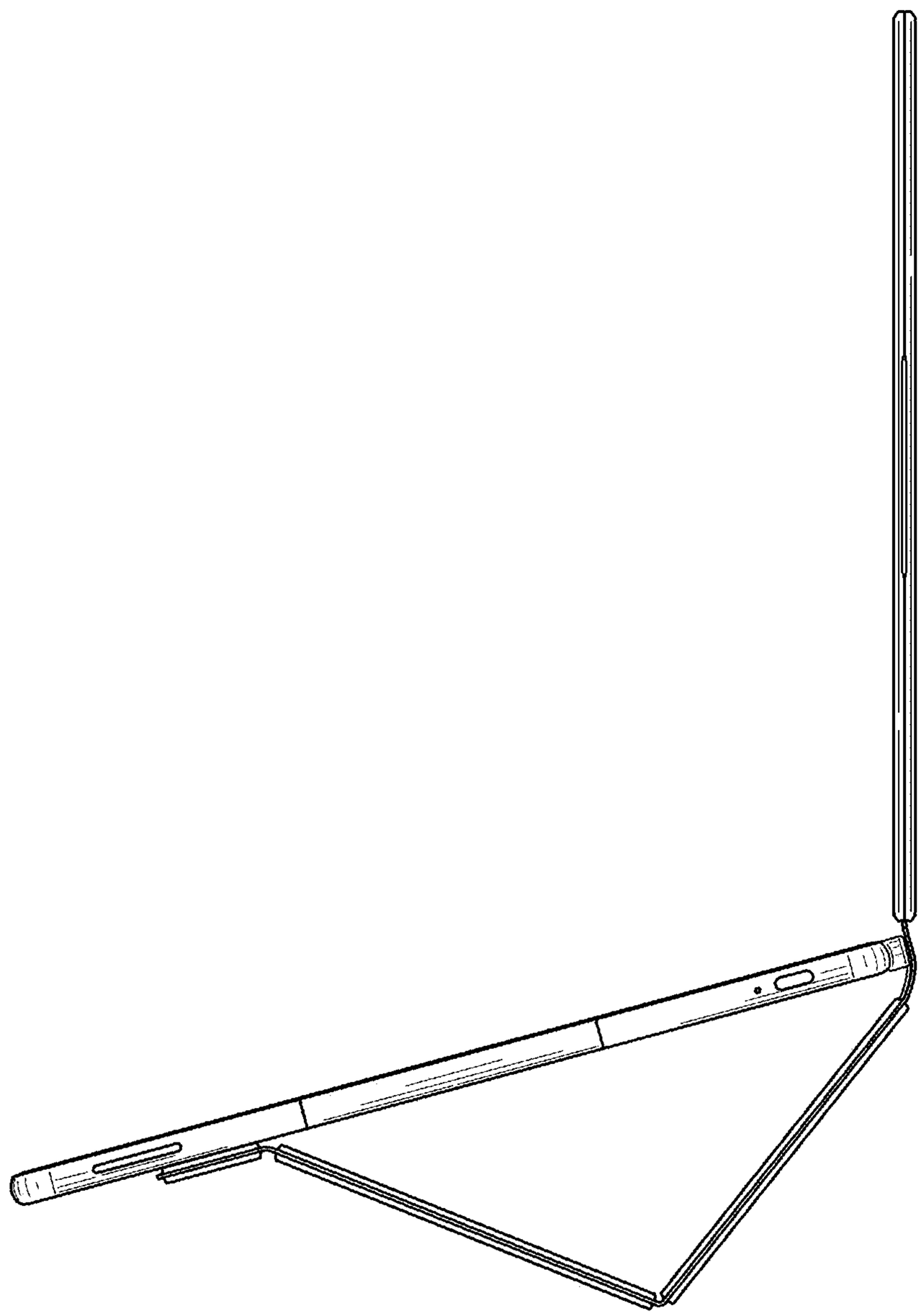

FIG. 39

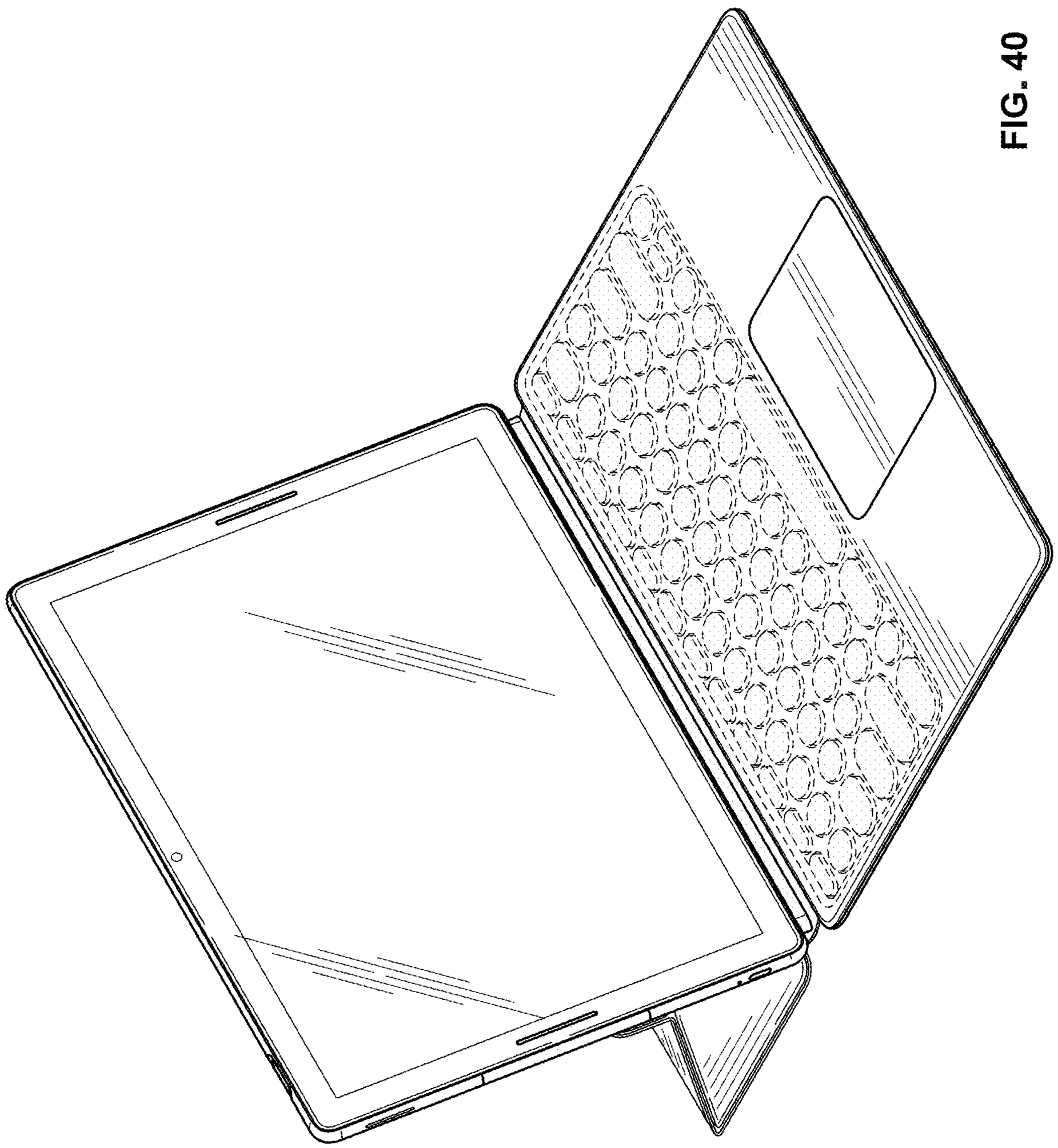

FIG. 40

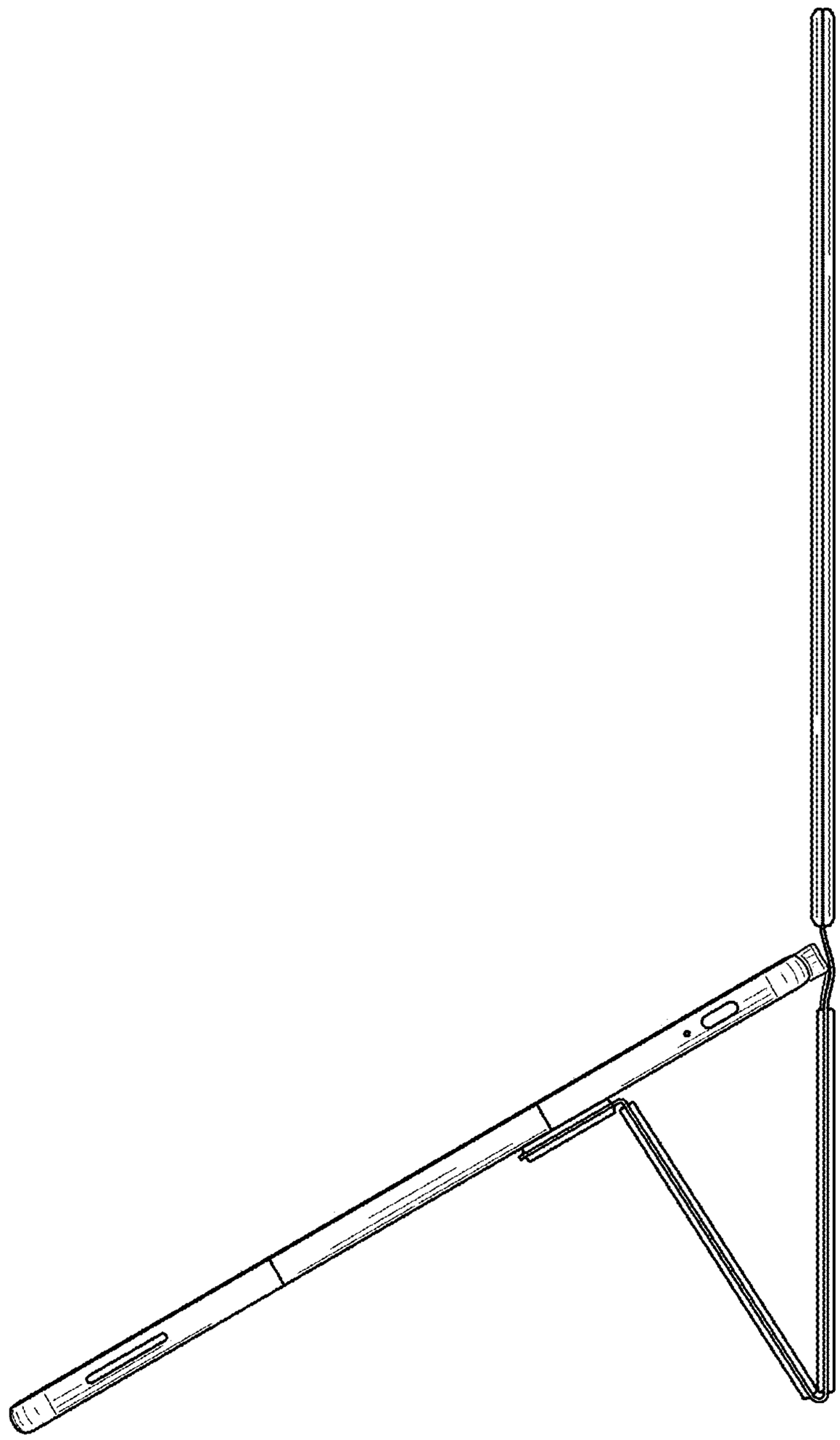

FIG. 41

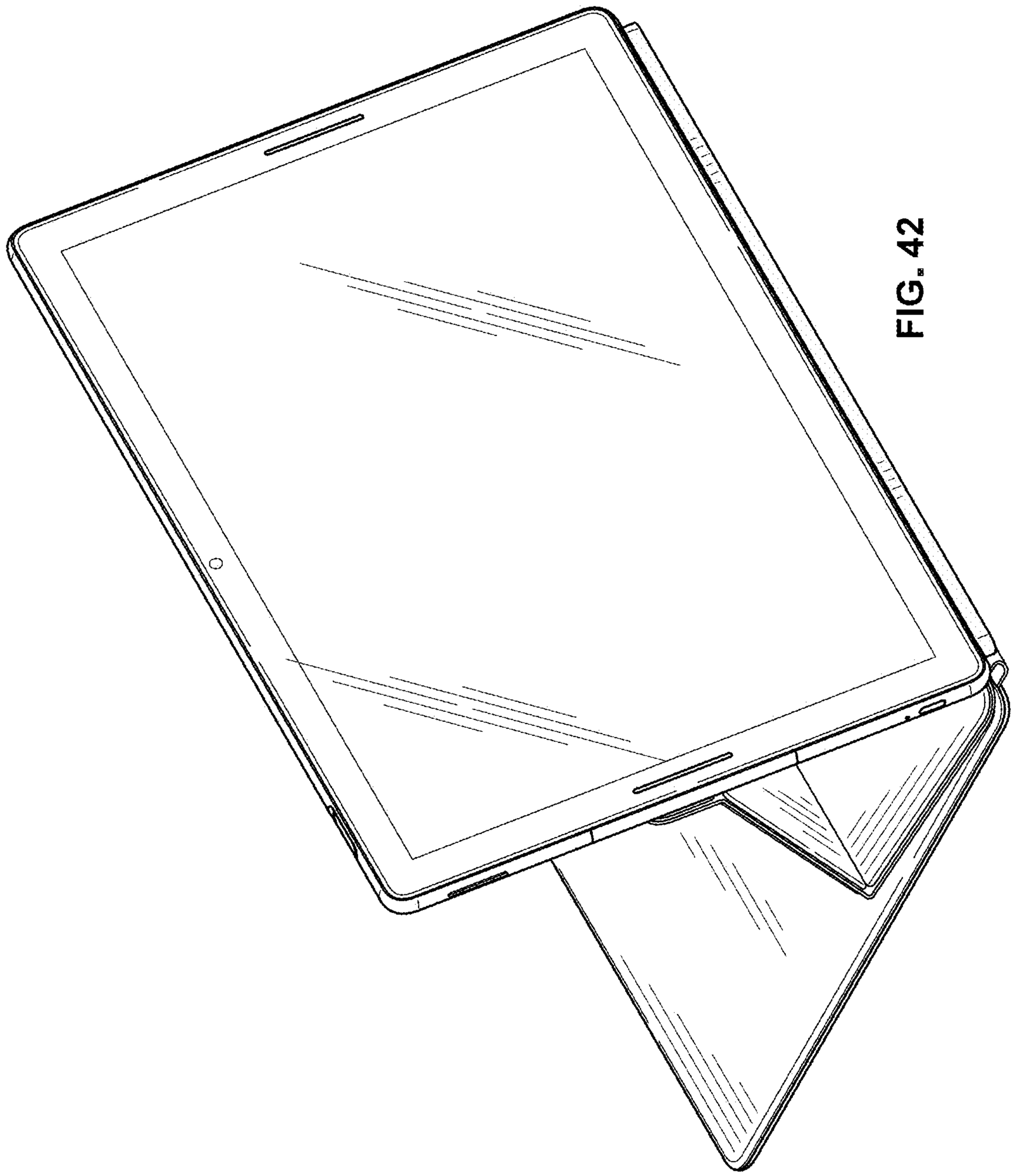

FIG. 42

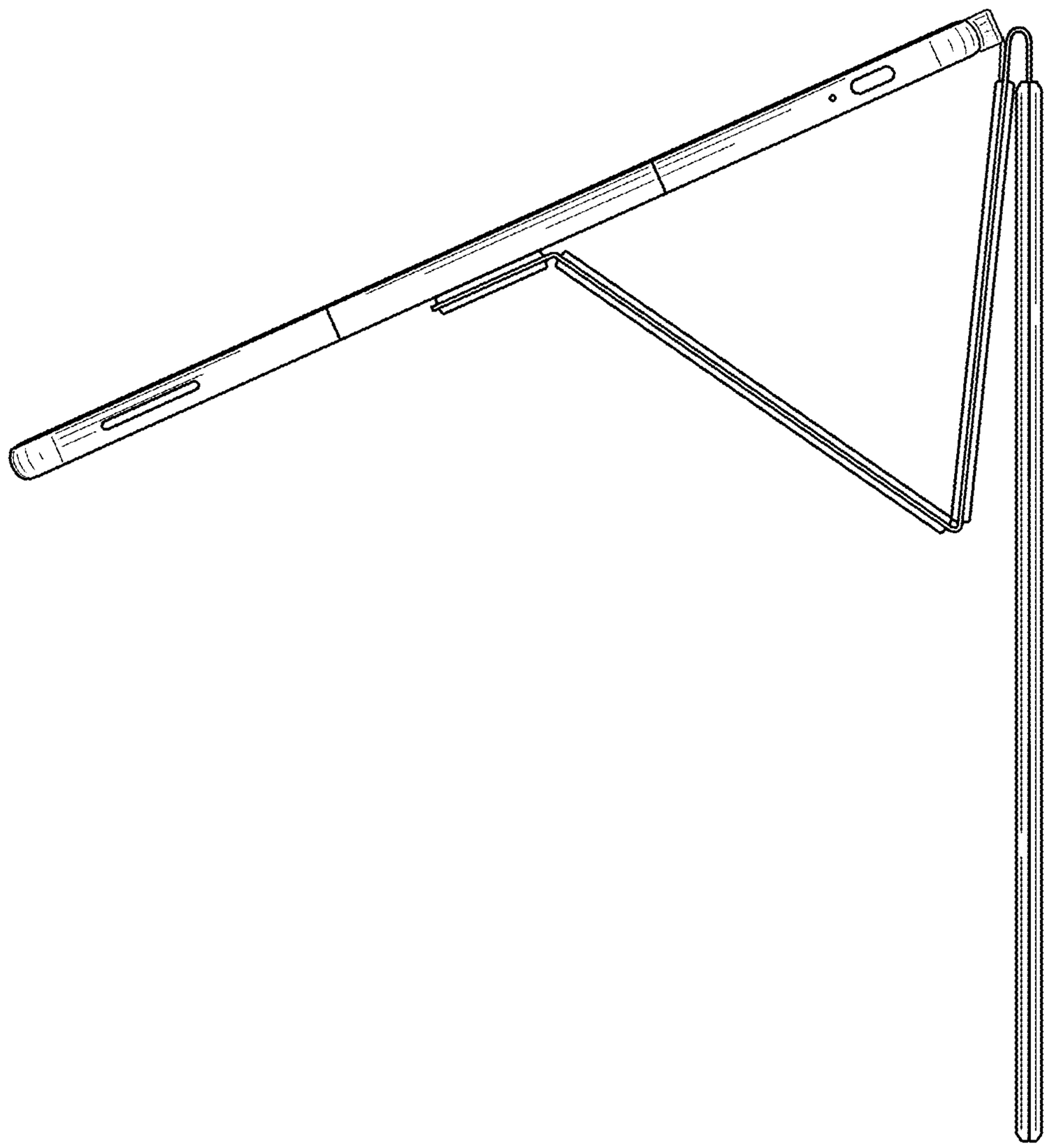

FIG. 43

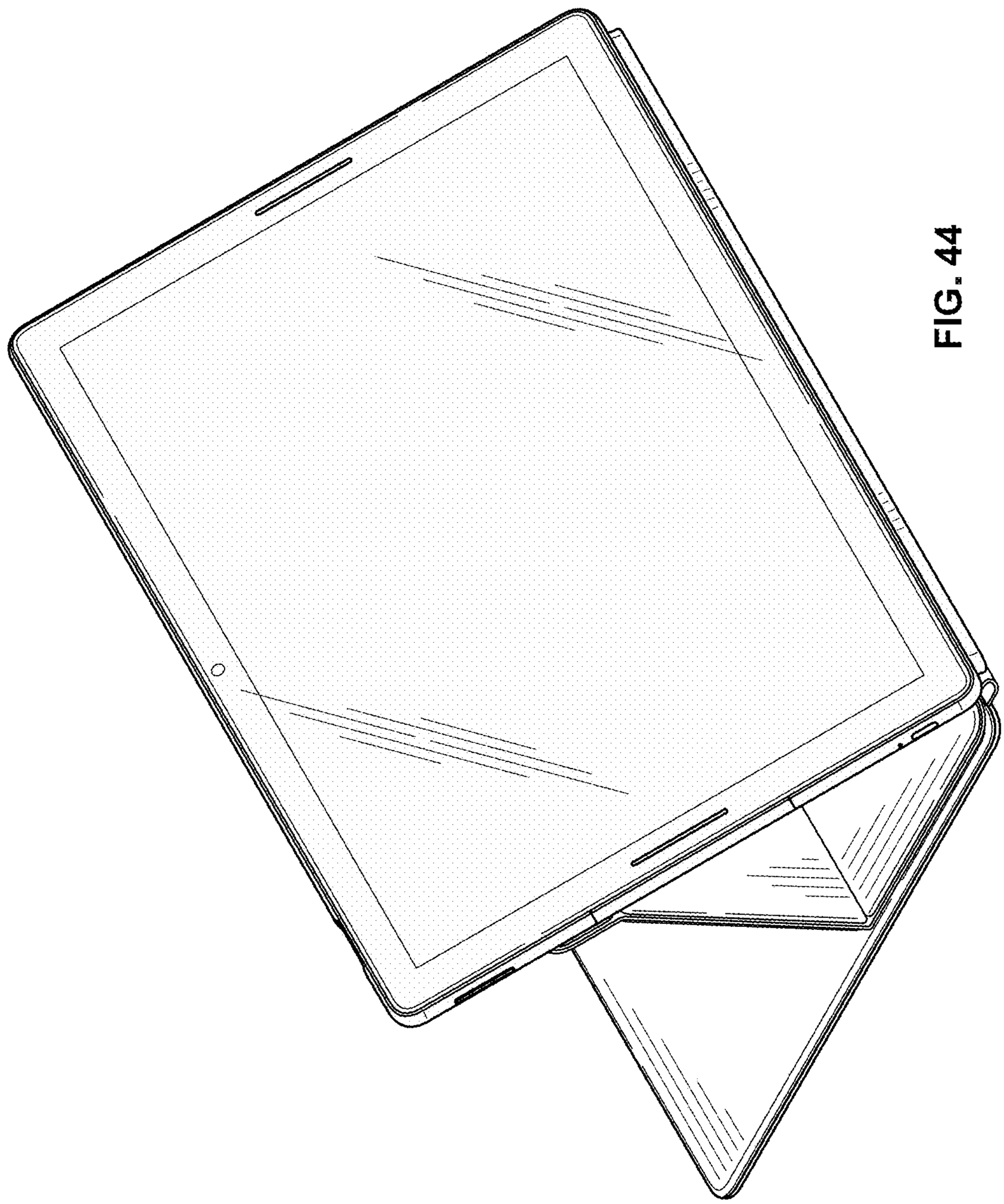

FIG. 44

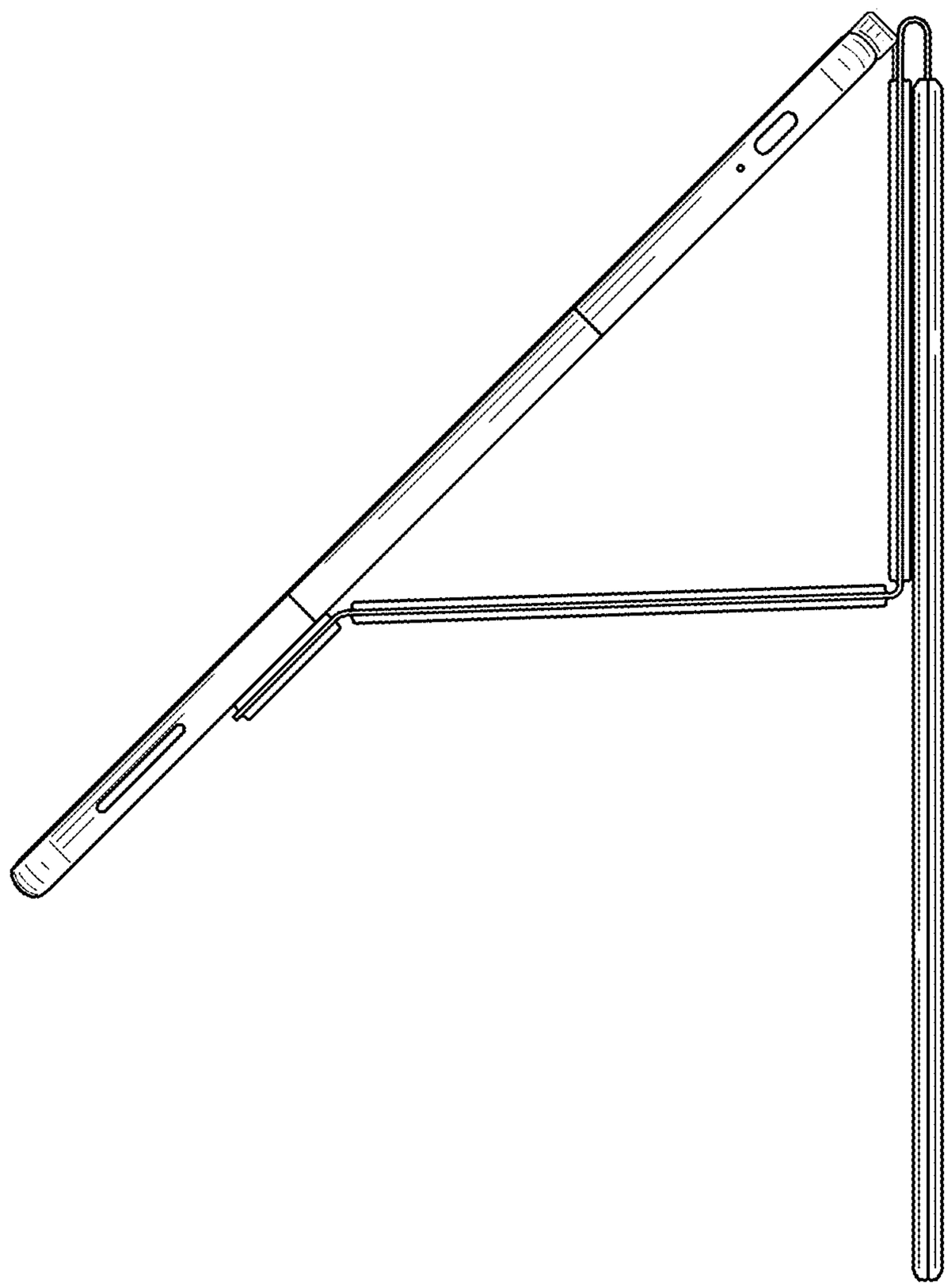

FIG. 45

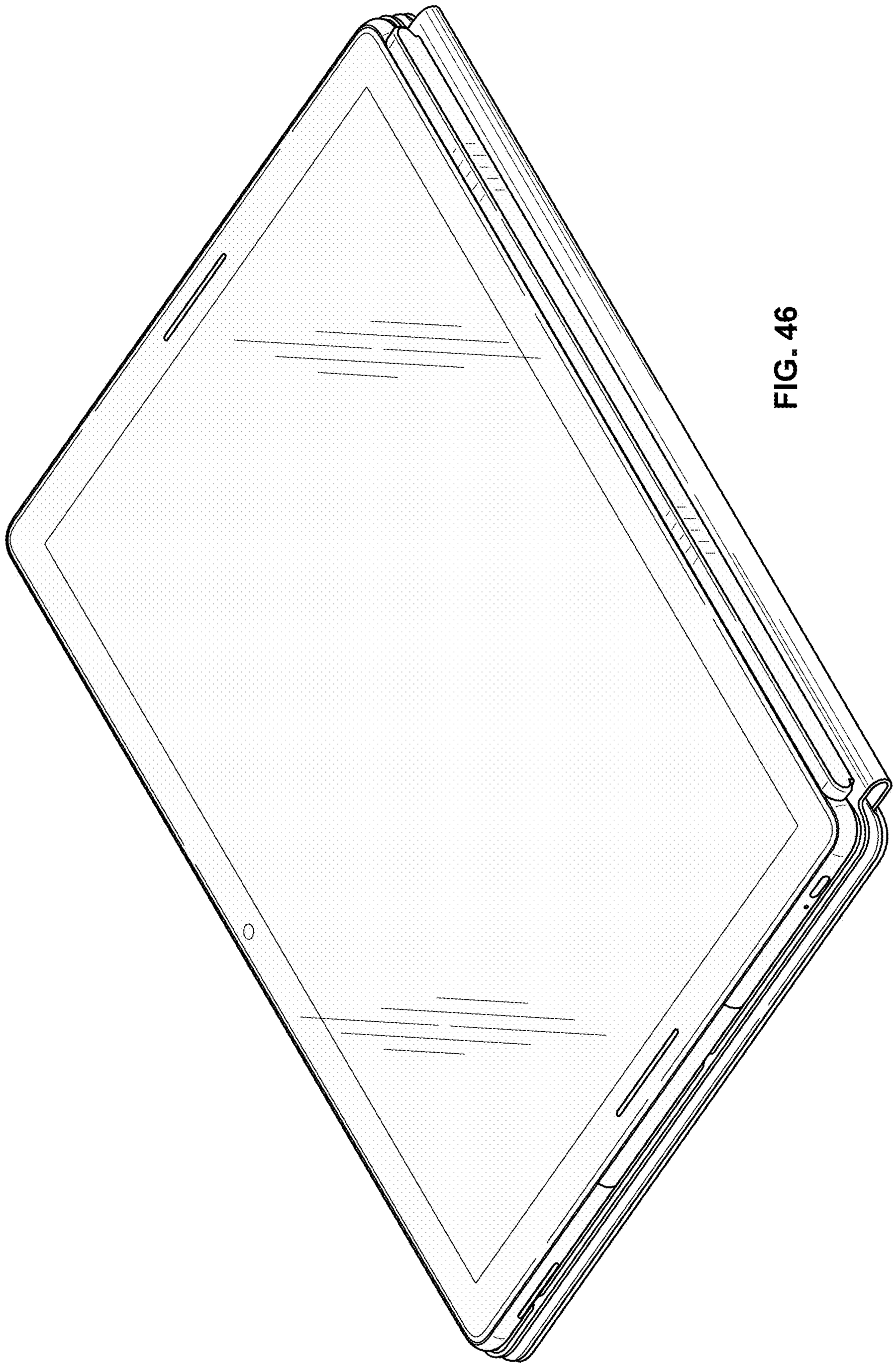

FIG. 46

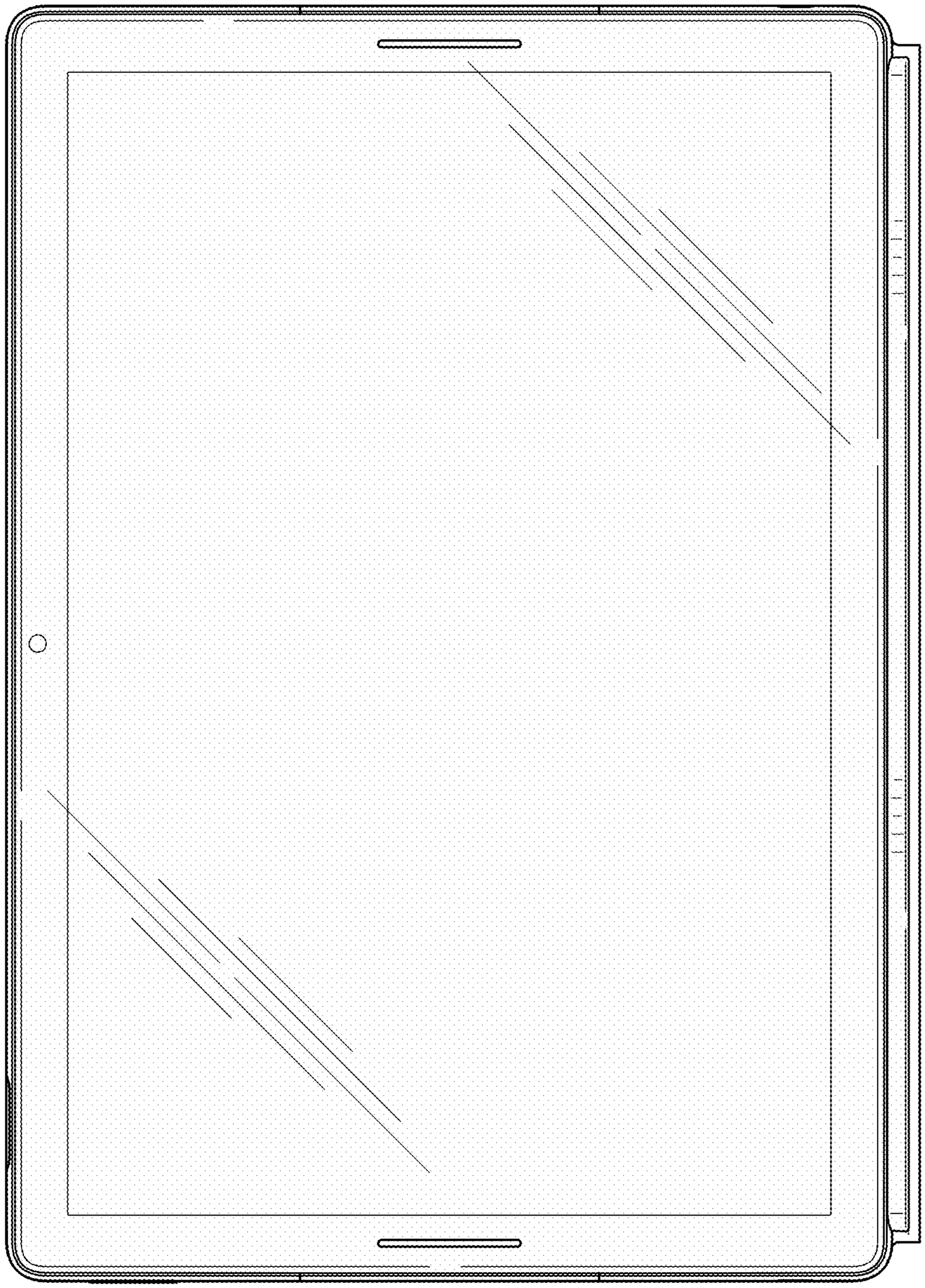

FIG. 47

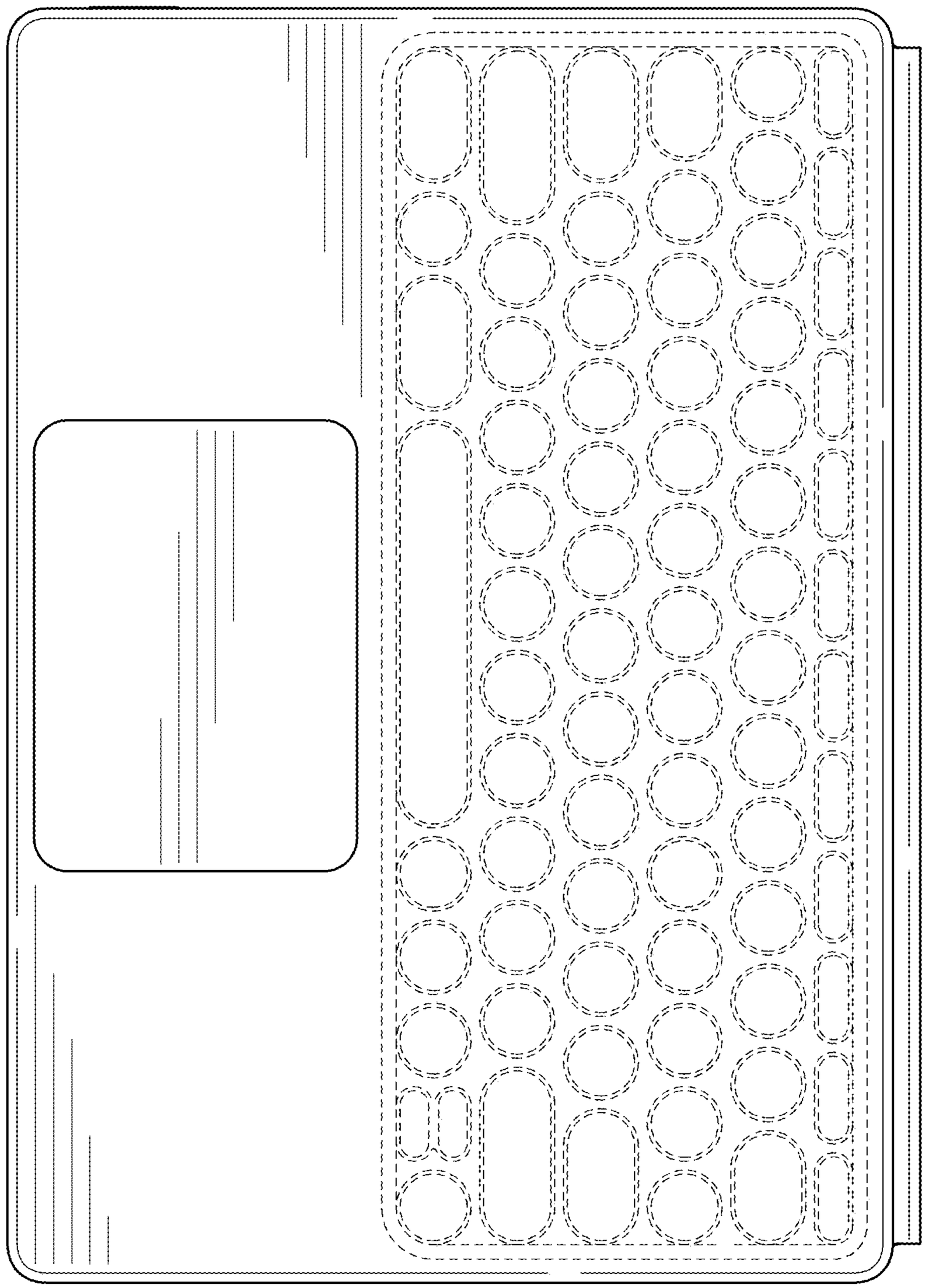

FIG. 48

FIG. 50

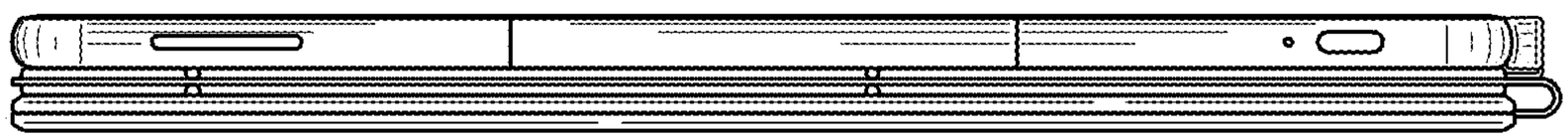

FIG. 49

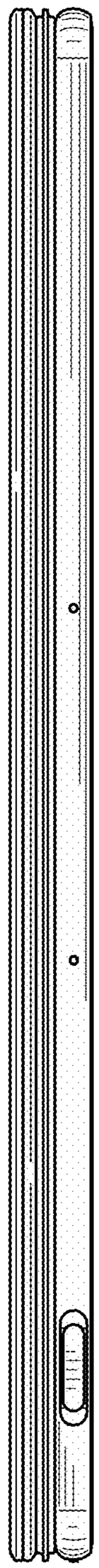

FIG. 51

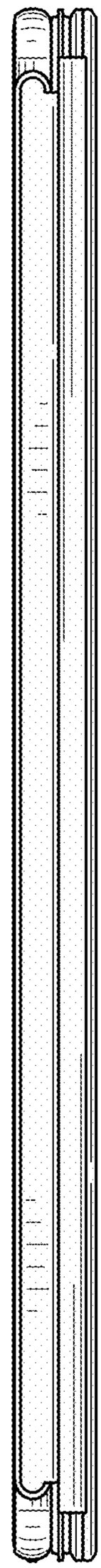

FIG. 52