US00D884957S

(12) United States Design Patent

Dennis et al.

(10) Patent No.: US D884,957 S
(45) Date of Patent: ** May 19, 2020

(54) **LUMINAIRE**

(71) Applicant: **Lightforce Australia Pty Ltd.**, Hindmarsh (AU)

(72) Inventors: **Raymond L. Dennis**, Adelaide (AU); **Robert T. Dall**, Adelaide (AU)

(73) Assignee: **Lightforce Australia Pty Ltd.**, Hindmarsh (AU)

(**) Term: **15 Years**

(21) Appl. No.: **29/656,200**

(22) Filed: **Jul. 11, 2018**

(51) **LOC (12) Cl.** **26-03**

(52) **U.S. Cl.**
USPC **D26/118**; D26/63

(58) **Field of Classification Search**
USPC D26/1, 24, 61, 63, 65, 85, 92, 118, 28
CPC F21V 21/14; F21V 15/01; F21V 14/02; F21V 21/30; F21V 21/00; F21V 14/00; F21S 8/00; F21S 8/003; F21S 8/043; F21Y 2105/001
See application file for complete search history.

(56) **References Cited**

U.S. PATENT DOCUMENTS

D566,318	S	*	4/2008	Quiogue	D26/63
D573,286	S	*	7/2008	Zettl	D26/63
7,997,761	B2	*	8/2011	Peck	F21V 21/116 362/249.02
D675,758	S	*	2/2013	Adams	D26/28
D676,162	S		2/2013	Adams	
D680,893	S		4/2013	Adams	
D688,399	S		8/2013	Adams	
D704,363	S		5/2014	Adams	
D704,364	S		5/2014	Adams	
D704,365	S		5/2014	Adams	
D708,778	S	*	7/2014	Sibitzky	D26/118
D718,478	S		11/2014	Adams	
D732,219	S		6/2015	Adams	
D739,072	S	*	9/2015	Adams	D26/118
D775,401	S	*	12/2016	Sibitzky	D26/118
D775,402	S		12/2016	Sibitzky et al.	
D775,403	S		12/2016	Adams et al.	
D784,599	S		4/2017	Sibitzky et al.	
D799,079	S		10/2017	Dennis et al.	
D867,629	S	*	11/2019	Renvall	D26/28
D872,920	S	*	1/2020	Korpi	D26/63
2013/0265755	A1		10/2013	Adams	
2014/0016317	A1		1/2014	Adams	

* cited by examiner

Primary Examiner — Brian N. Vinson
(74) *Attorney, Agent, or Firm* — Wood Herron & Evans LLP

(57) **CLAIM**

The ornamental design for a luminaire, as shown and described.

DESCRIPTION

FIG. **1** is a front isometric view of the luminaire;
FIG. **2** is a rear isometric view;
FIG. **3** is a rear perspective view;
FIG. **4** is a front elevational view;
FIG. **5** is a rear elevational view;
FIG. **6** is a left side elevational view
FIG. **7** is a right side elevational view;
FIG. **8** is a top plan view; and,
FIG. **9** is a bottom plan view.
The features of the luminaire shown in broken lines are for illustrative purposes only and form no part of the claimed design.

1 Claim, 9 Drawing Sheets

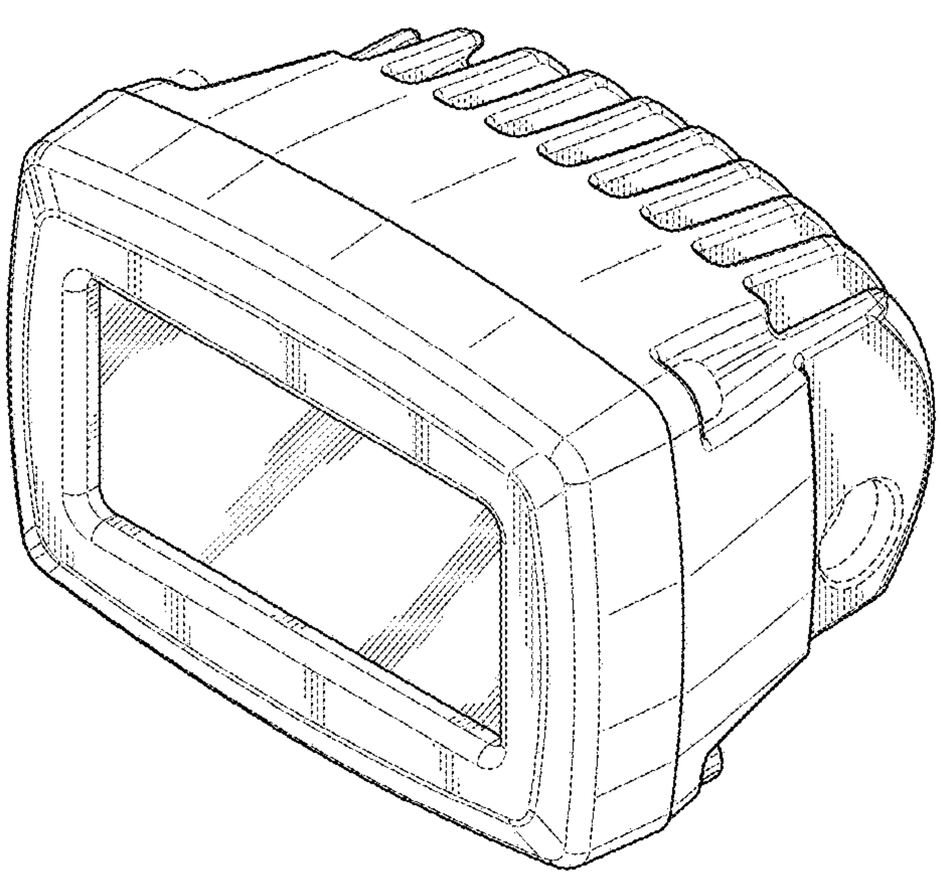

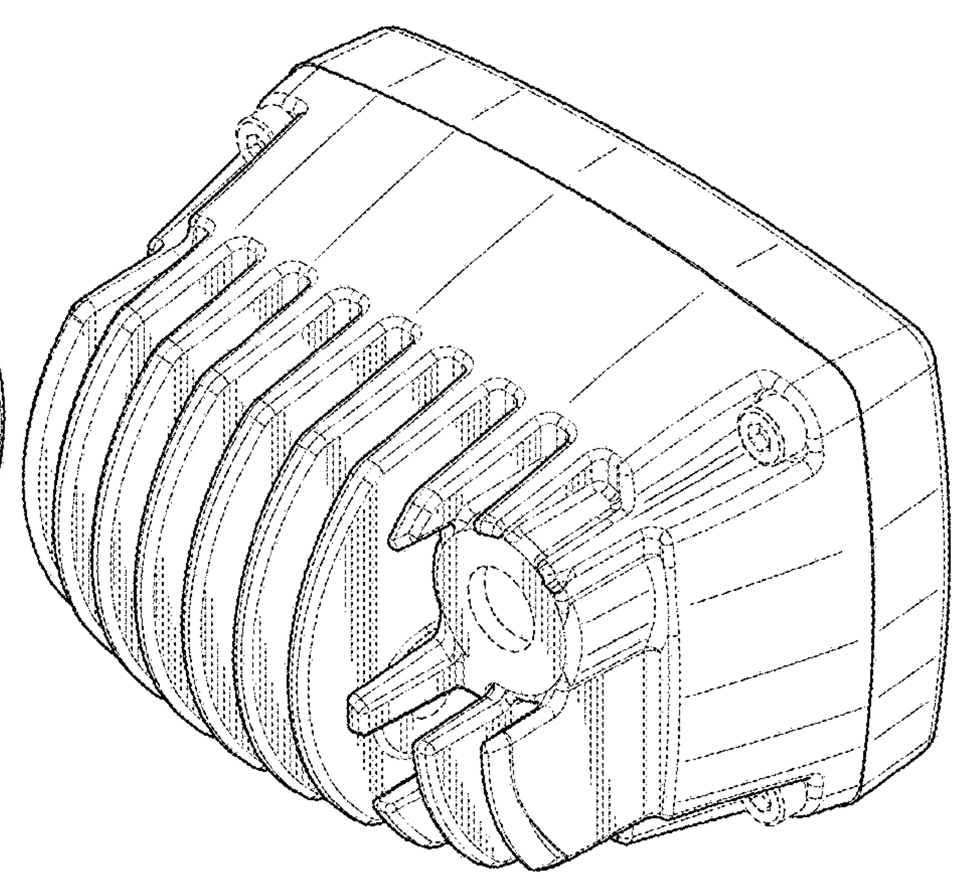

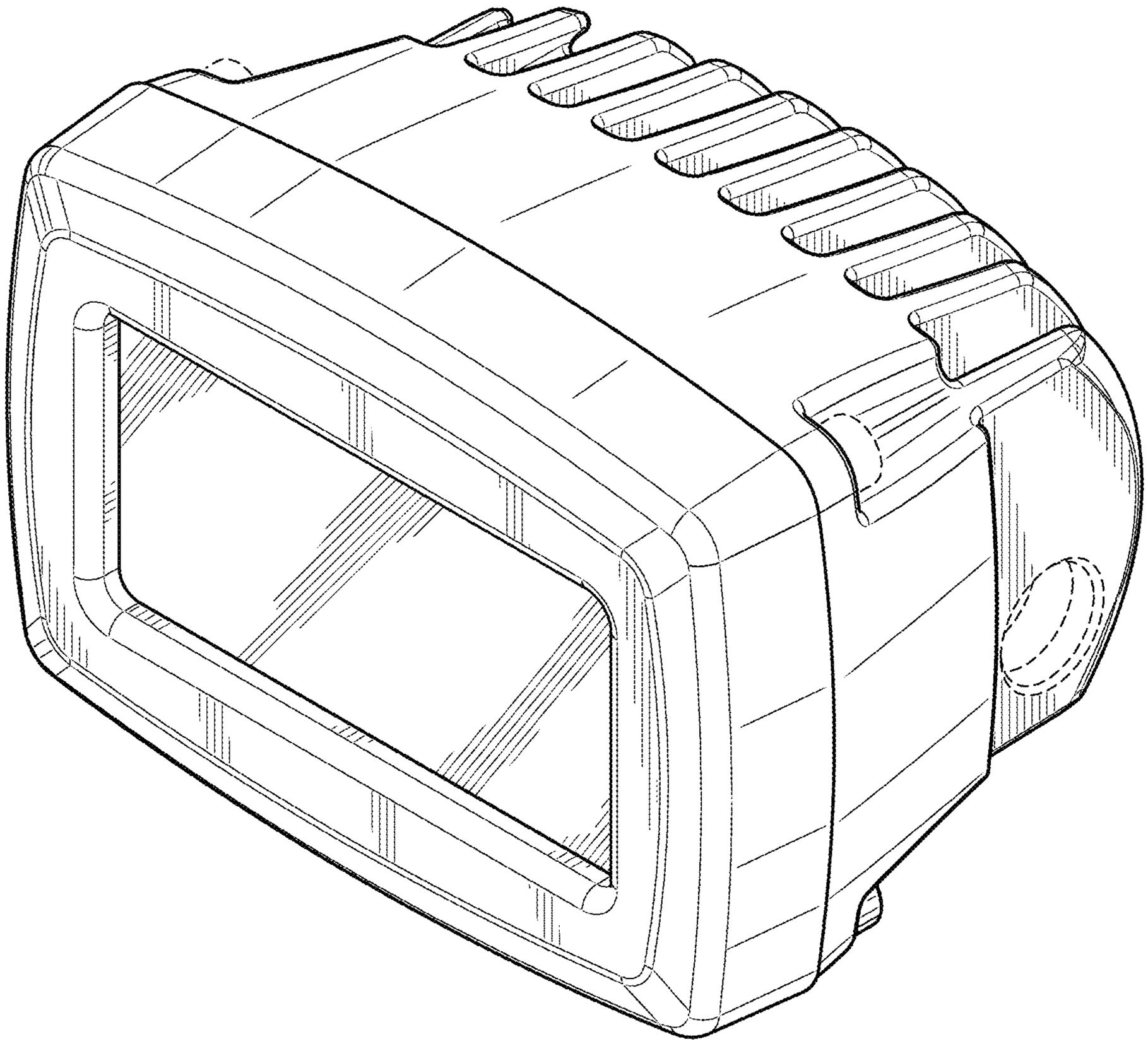

FIG. 1

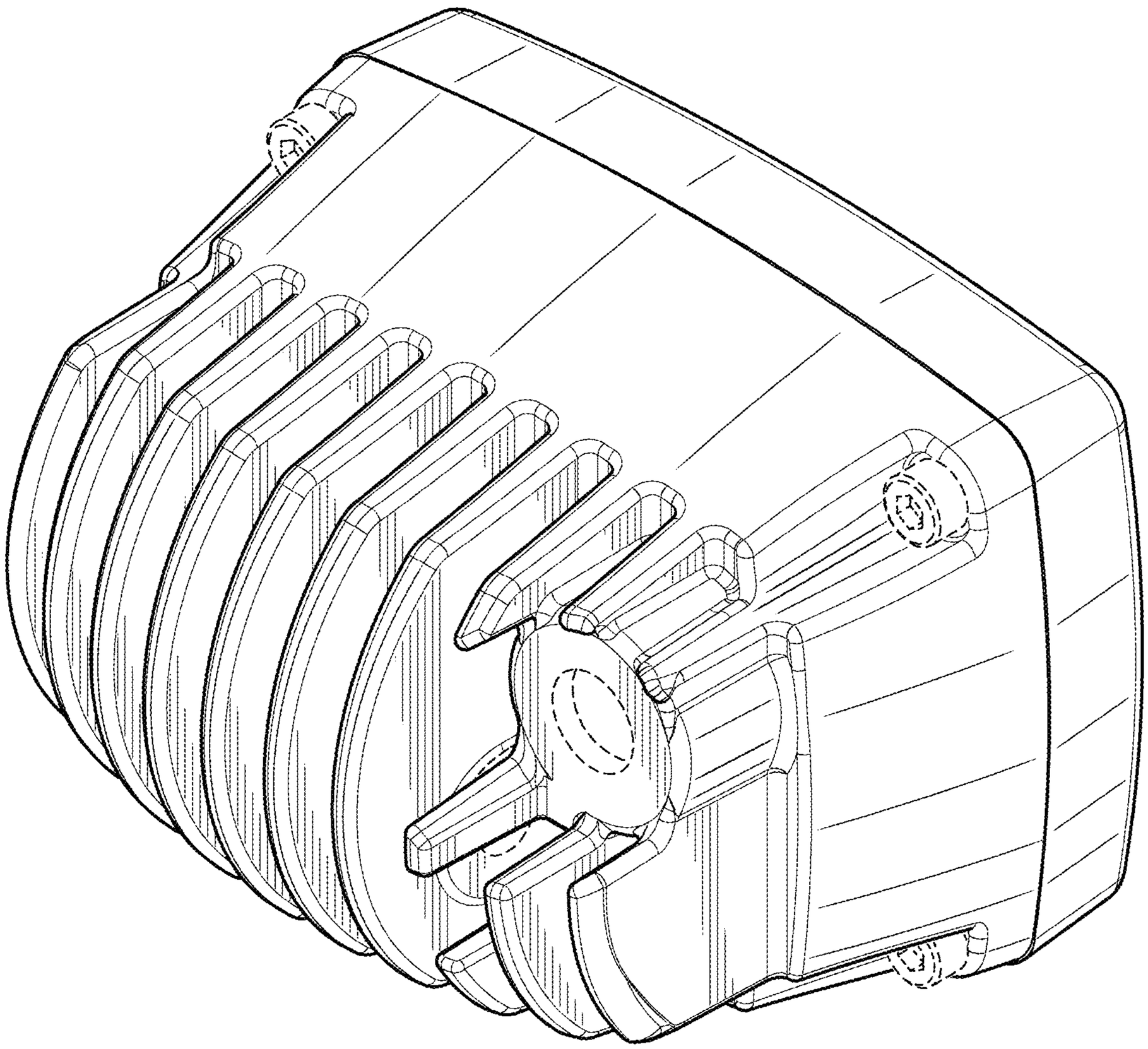

FIG. 2

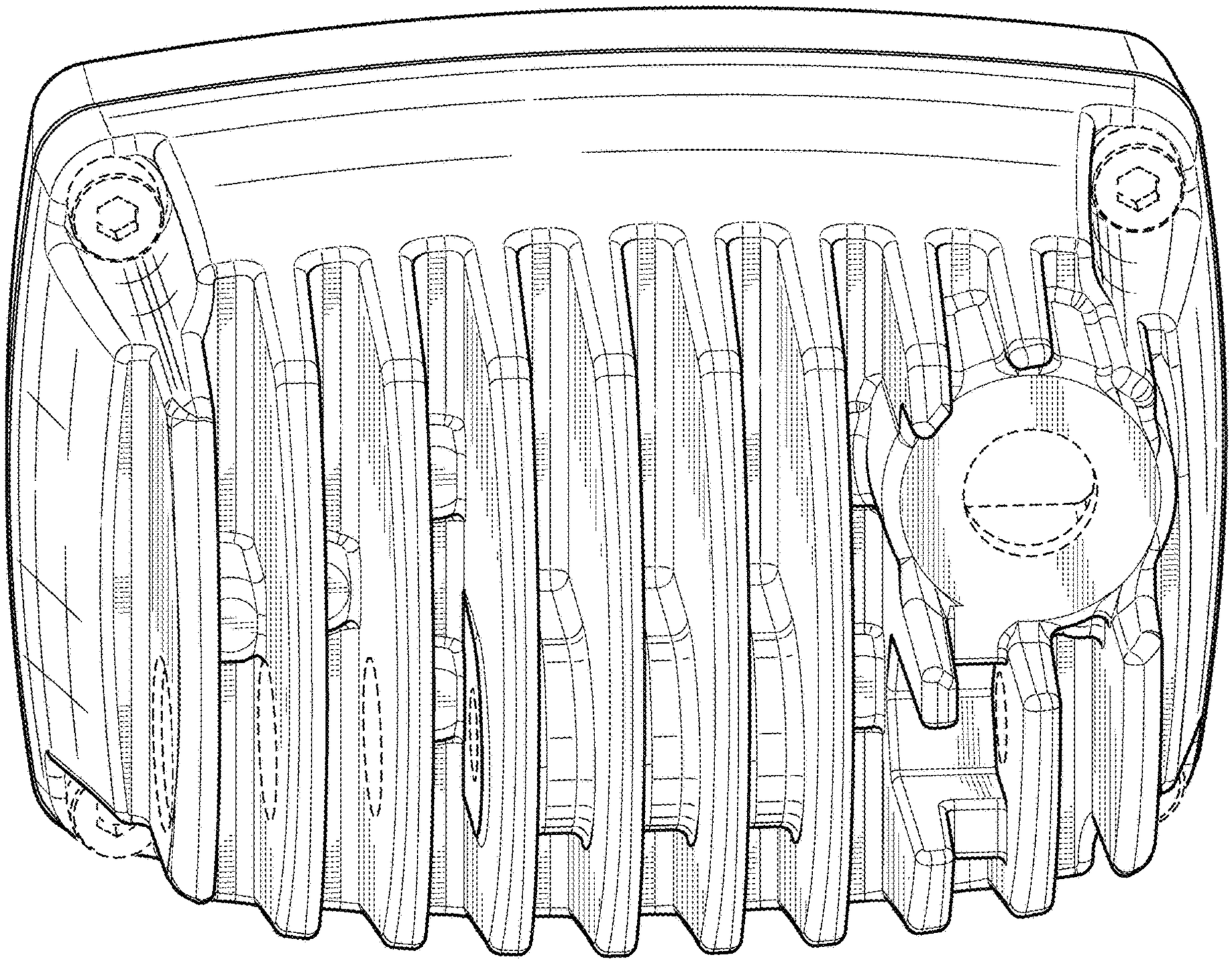

FIG. 3

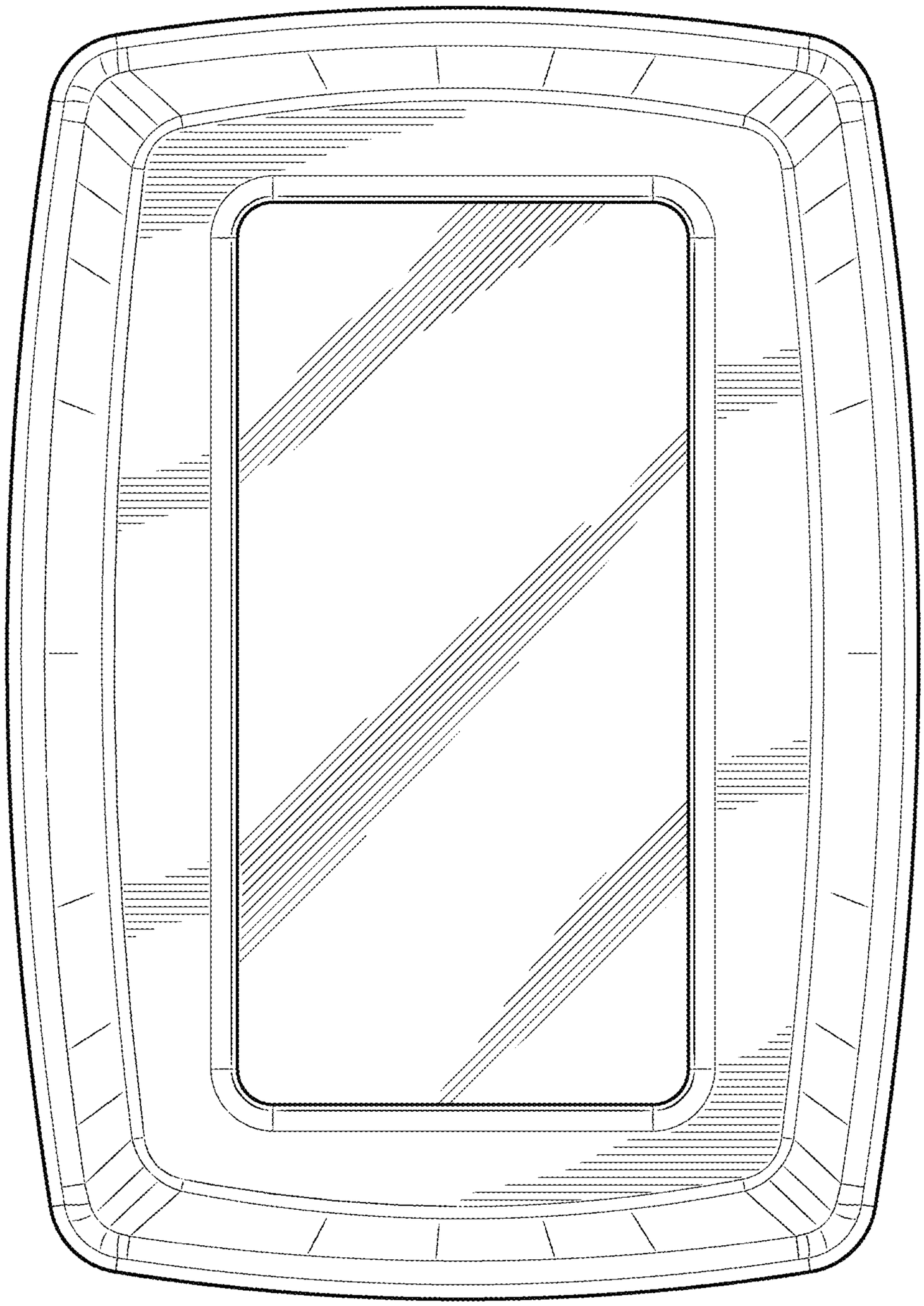

FIG. 4

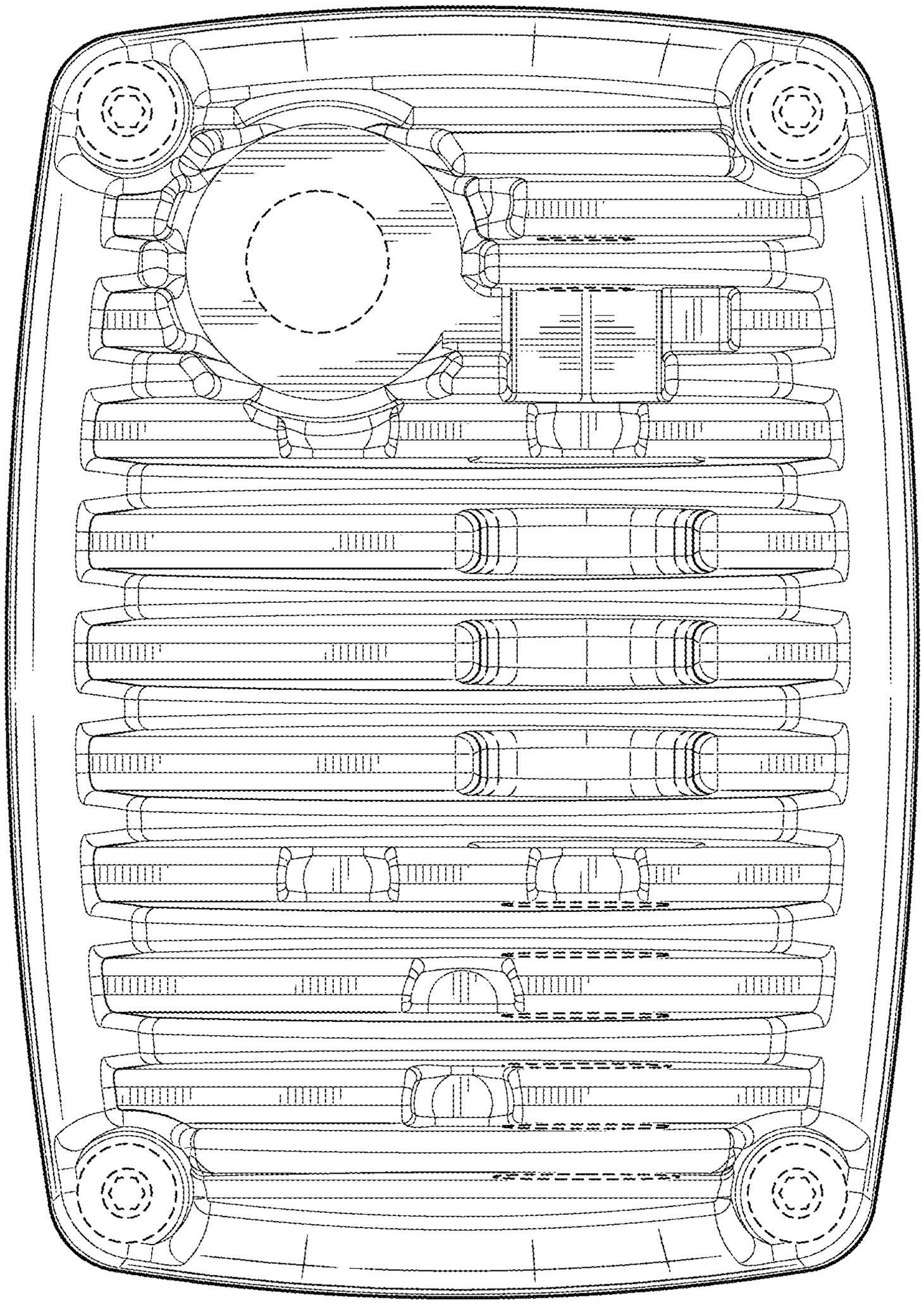

FIG. 5

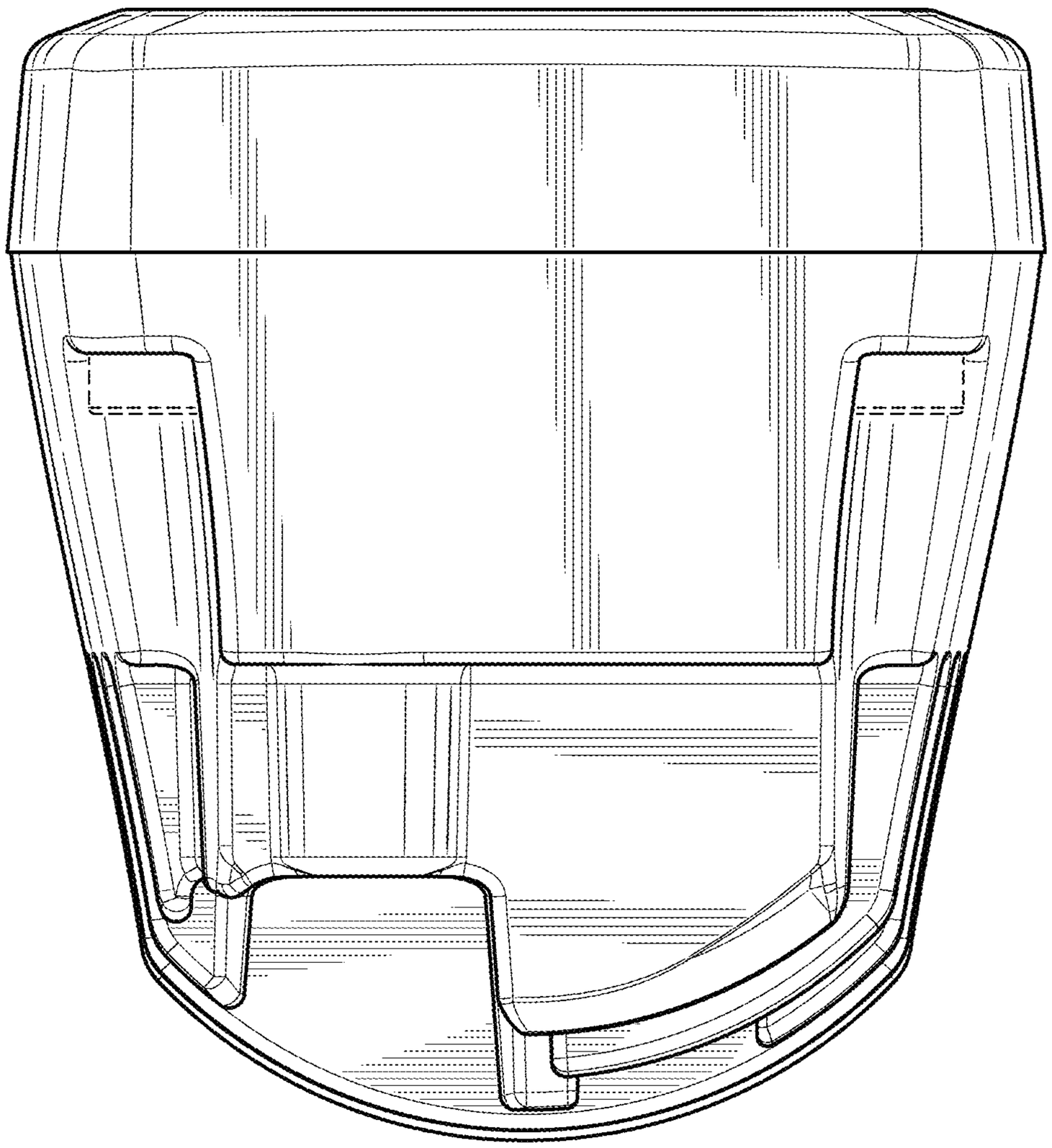

FIG. 6

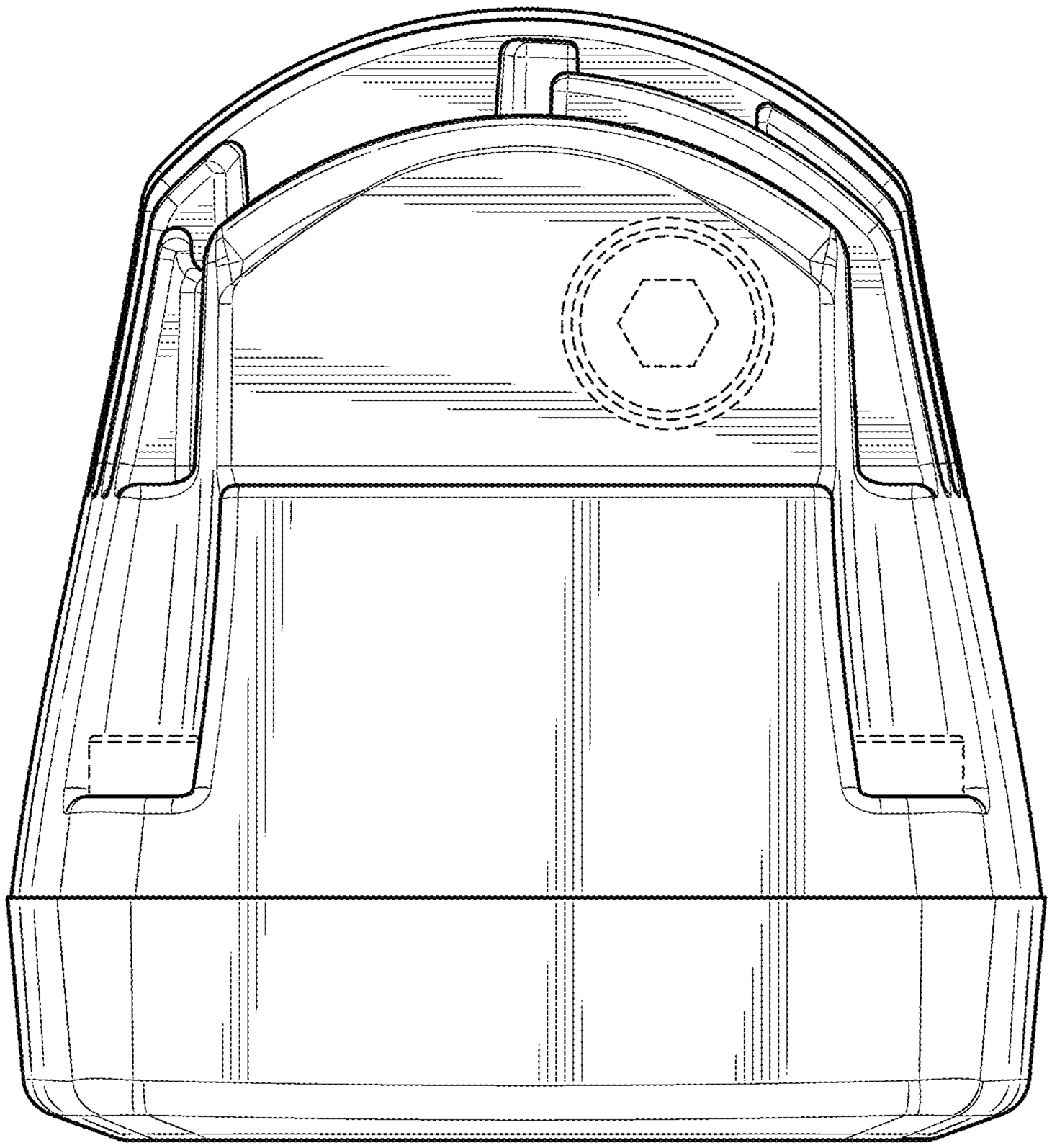

FIG. 7

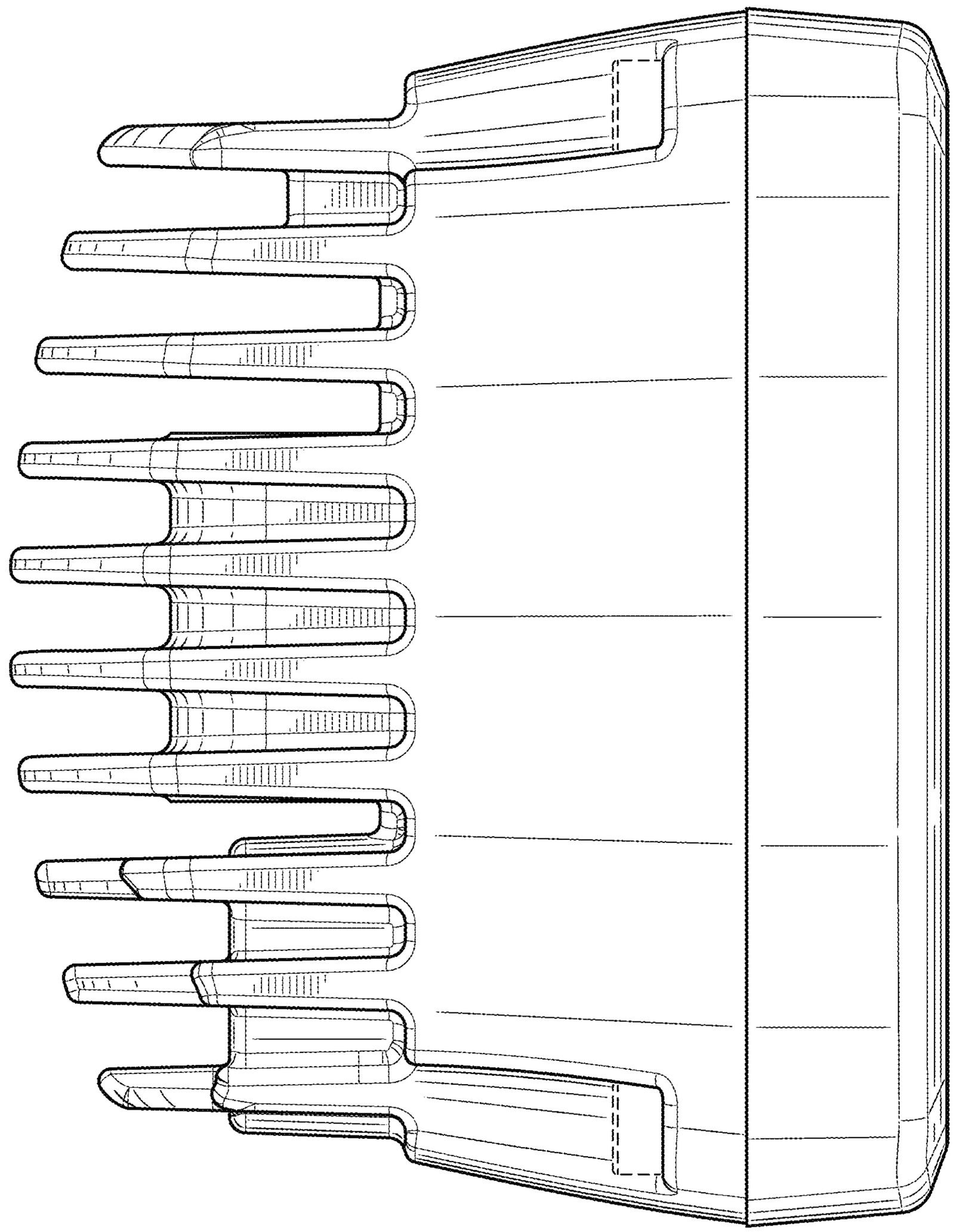

FIG. 8

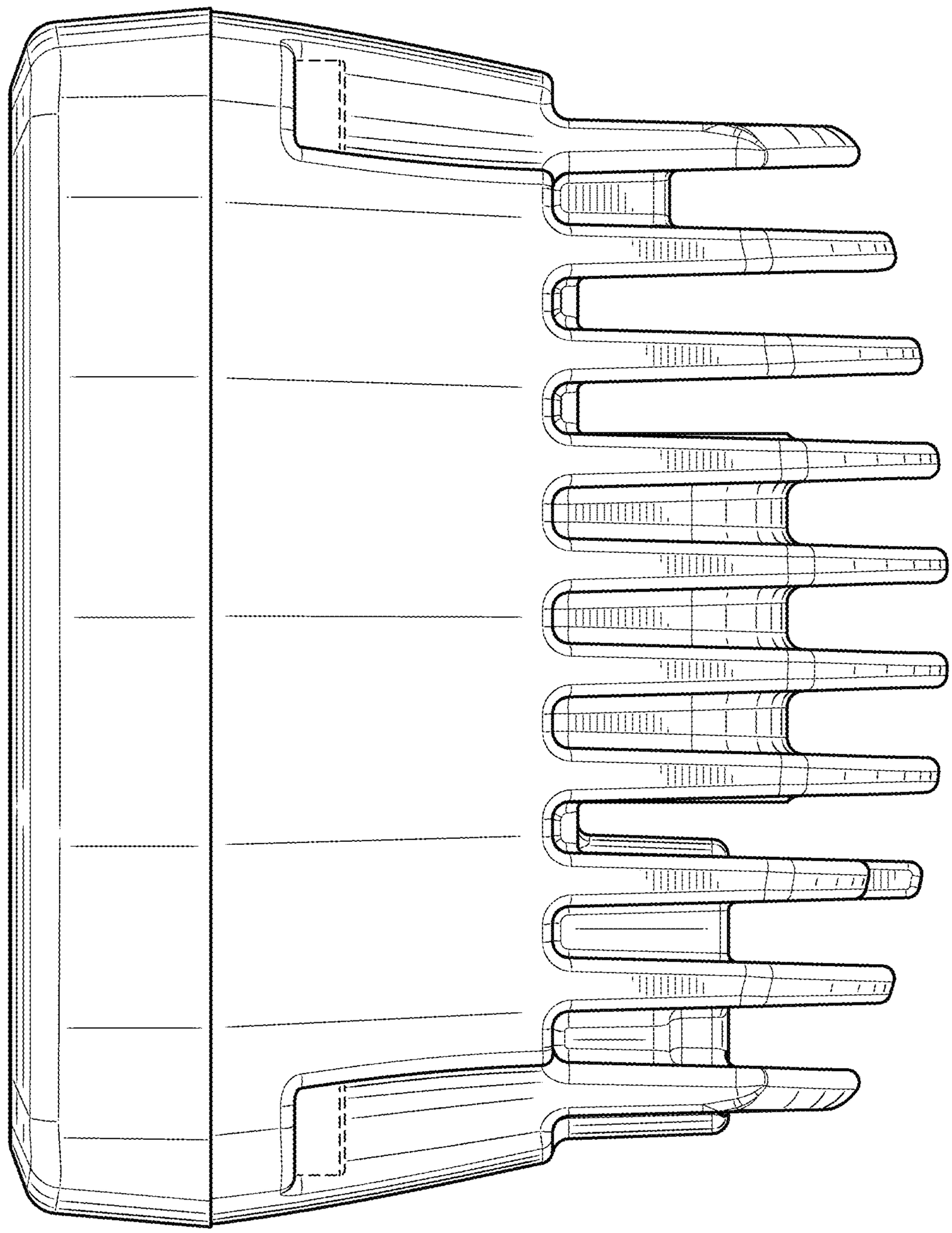

FIG. 9