US00D884897S

(12) United States Design Patent

Fateh et al.

(10) Patent No.: US D884,897 S
(45) Date of Patent: ** May 19, 2020

(54) **DENTAL IMPLANT**

(71) Applicants: **Ardavan Fateh**, Denver, CO (US); **Emilio Ivan Arguello**, Aurora, CO (US)

(72) Inventors: **Ardavan Fateh**, Denver, CO (US); **Emilio Ivan Arguello**, Aurora, CO (US)

(**) Term: **15 Years**

(21) Appl. No.: **29/679,477**

(22) Filed: **Feb. 6, 2019**

Related U.S. Application Data

(63) Continuation of application No. 14/588,726, filed on Jan. 2, 2015, now abandoned.

(51) **LOC (12) Cl.** **24-03**

(52) **U.S. Cl.**
USPC **D24/156**

(58) **Field of Classification Search**
USPC D24/155, 156
CPC A61C 8/00; A61C 8/0089; A61C 8/0069; A61C 8/0054; A61C 8/0096; A61C 8/0039; A61C 8/0063; A61C 8/006; A61C 8/0001; A61C 8/0012; A61C 8/0075; A61C 8/0083; A61C 13/225
See application file for complete search history.

(56) **References Cited**

U.S. PATENT DOCUMENTS

D562,454	S	*	2/2008	Rassoli	D24/156
D578,218	S	*	10/2008	Purga	D24/156
D588,699	S	*	3/2009	Aldecoa	D24/156
D603,514	S	*	11/2009	Emanuelli	D24/156
D604,851	S	*	11/2009	Ishikawa	D24/156
D605,291	S	*	12/2009	Ishikawa	D24/156
D657,874	S	*	4/2012	Lussi	D24/156
D659,247	S	*	5/2012	Lussi	D24/156
D748,263	S	*	1/2016	Ishiwata	D24/156
D765,857	S	*	9/2016	Cho	D24/156
D805,642	S	*	12/2017	Takahashi	D24/156
2008/0233539	A1		9/2008	Rossler et al.	
2011/0151407	A1		6/2011	Canullo	

* cited by examiner

Primary Examiner — Charles D Hanson
(74) *Attorney, Agent, or Firm* — Neugeboren O'Dowd PC

(57) **CLAIM**

The ornamental design for a dental implant, as shown and described.

DESCRIPTION

FIG. **1** is a front perspective view of a dental implant.
FIG. **2** is a top plan view of the dental implant shown in FIG. **1**.
FIG. **3** is a bottom plan view of the dental implant shown in FIG. **1**.
FIG. **4** is a left side elevation view of the dental implant shown in FIG. **1**.
FIG. **5** is a right side elevation view of the dental implant shown in FIG. **1**.
FIG. **6** is a front elevation view of the dental implant shown in FIG. **1**.
FIG. **7** is a rear elevation view of the dental implant shown in FIG. **1**.
FIG. **8** is a front elevation view showing a cross-sectional designation for FIG. **9** along line **9-9** for the dental implant shown in FIG. **1**; and,
FIG. **9** is a right side elevation view of along cross-sectional line **9-9** of the dental implant shown in FIG. **8**.

1 Claim, 9 Drawing Sheets

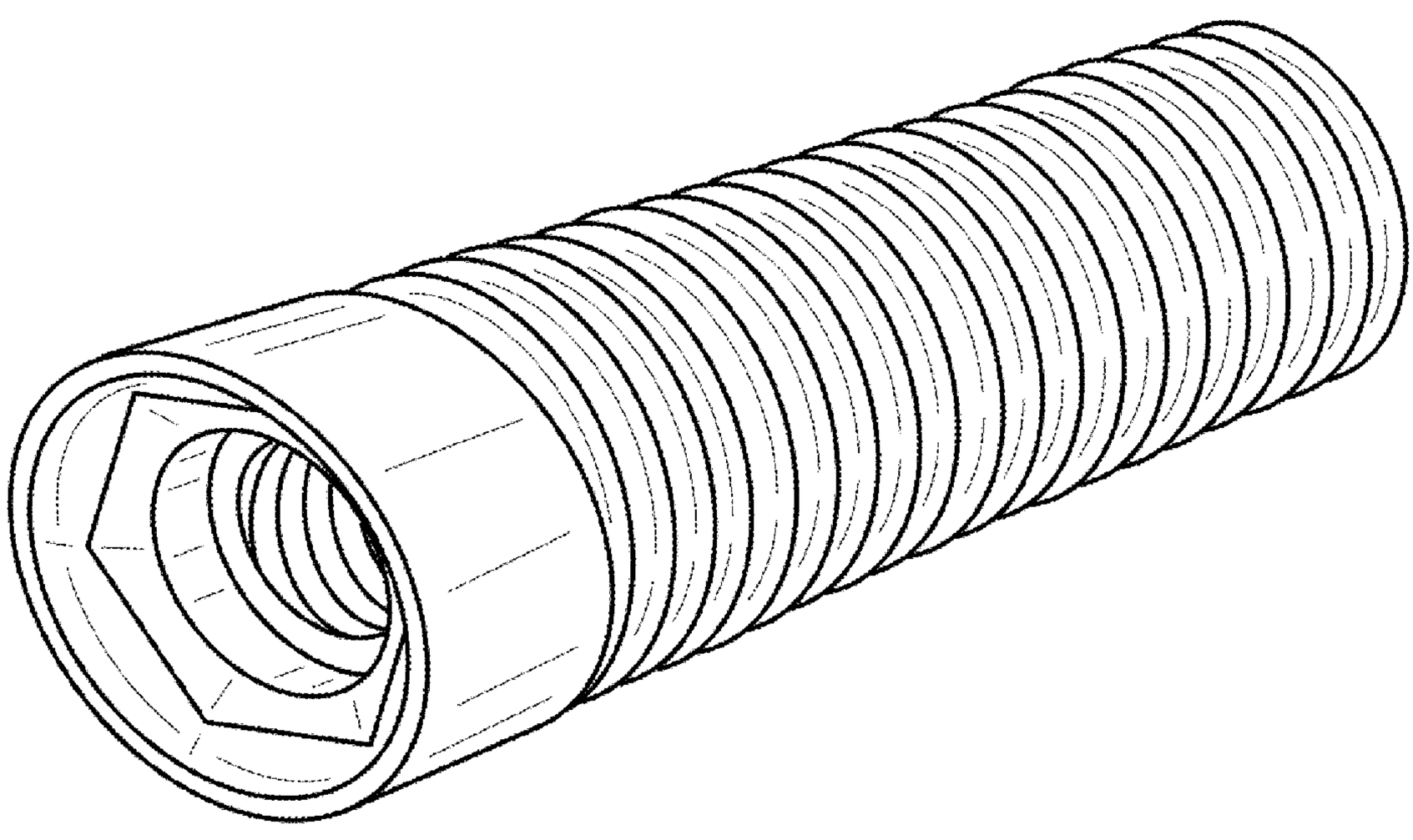

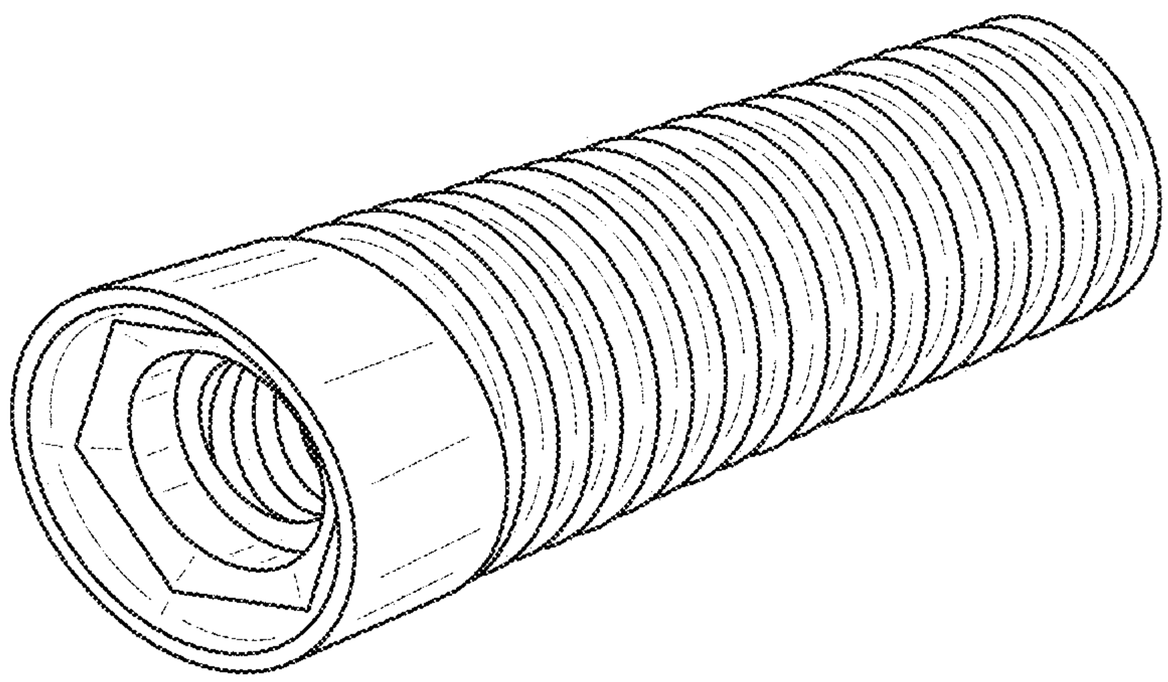

FIG. 1

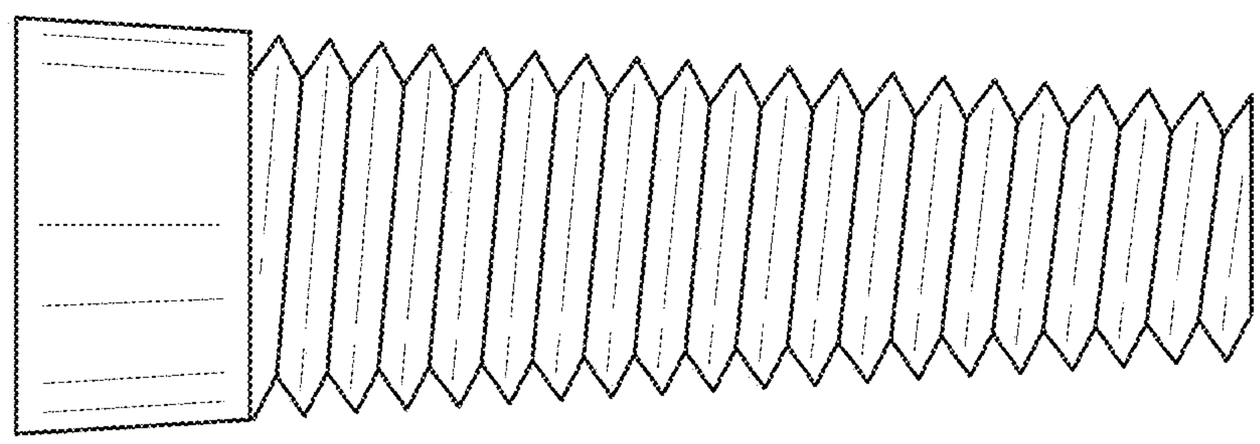

FIG. 2

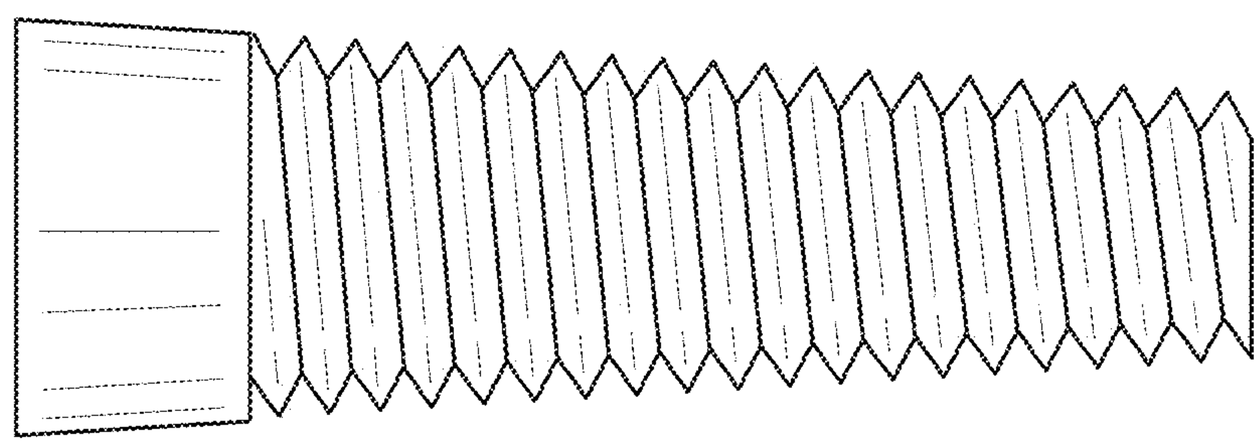

FIG. 3

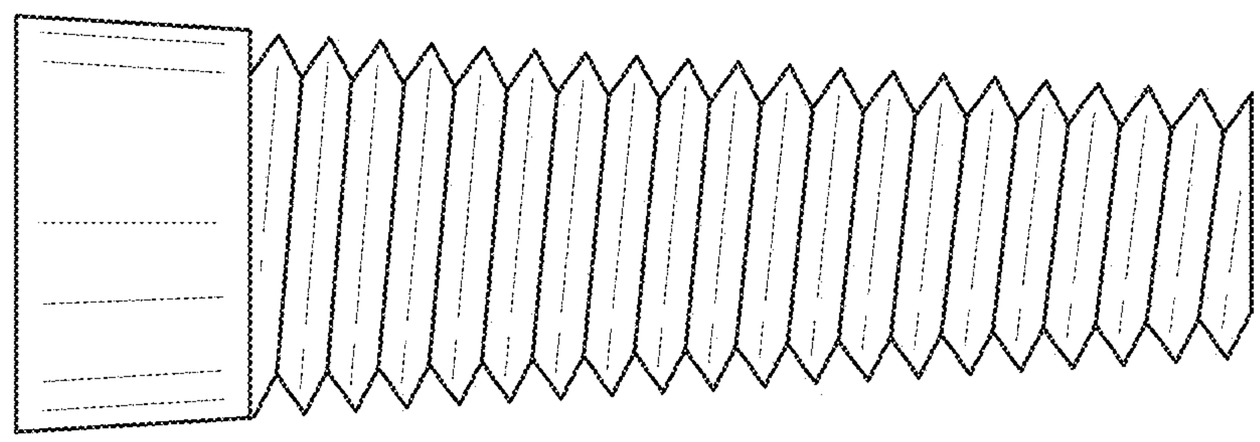

FIG. 4

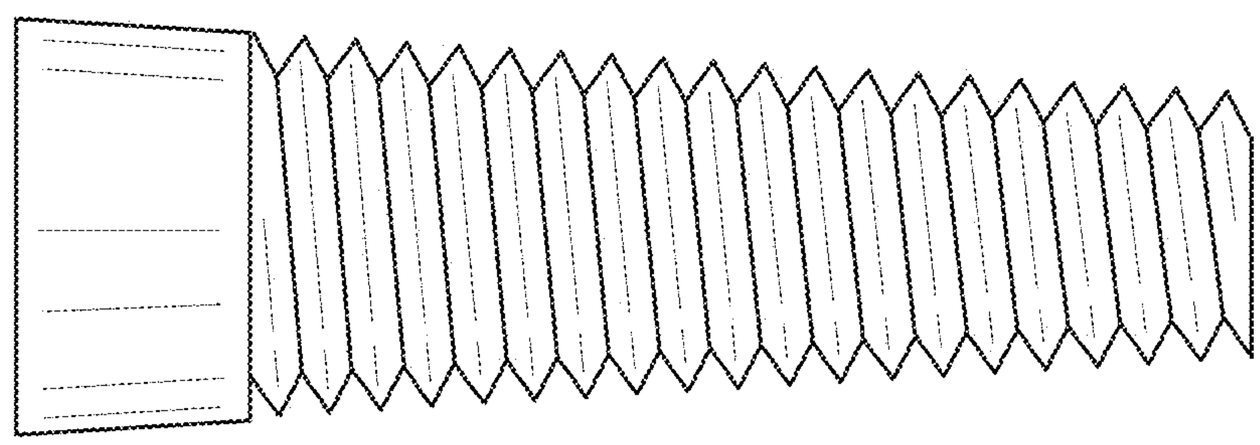

FIG. 5

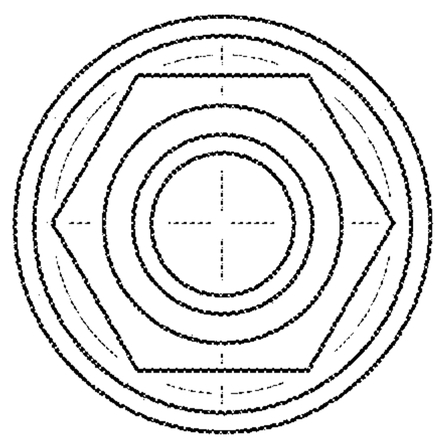

FIG. 6

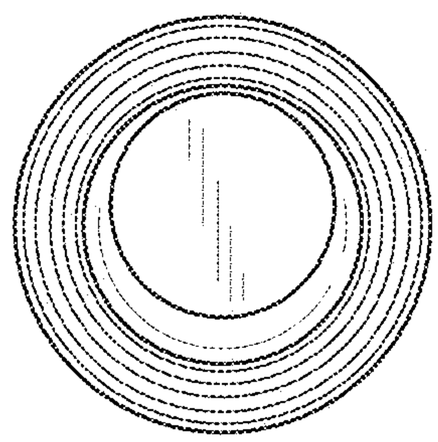

FIG. 7

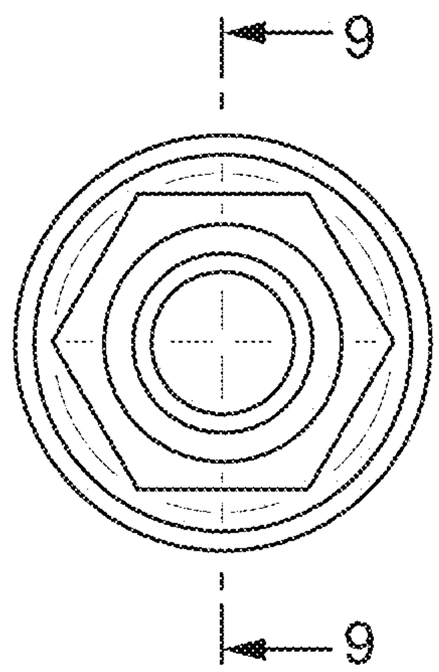

FIG. 8

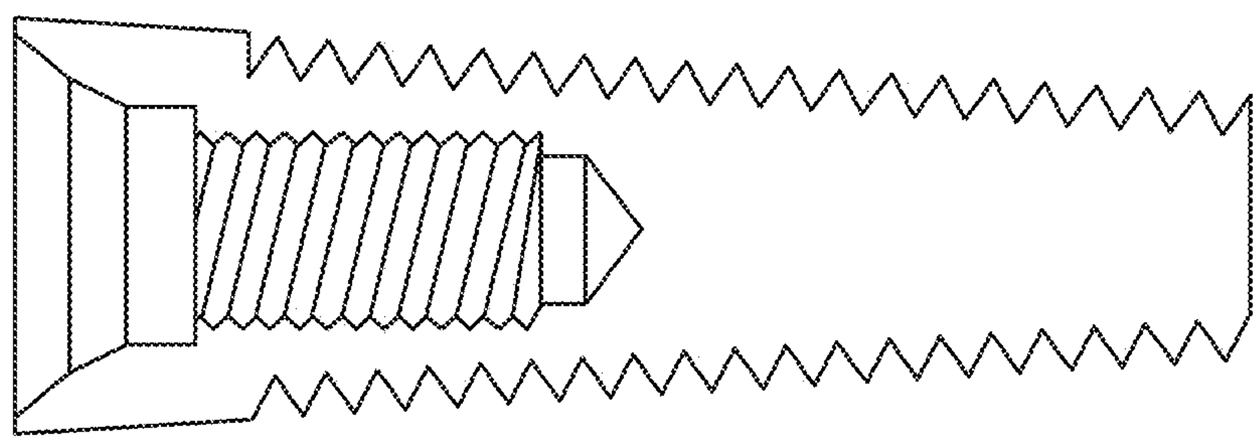

FIG. 9