US00D884692S

(12) United States Design Patent

Berini

(10) Patent No.: US D884,692 S
(45) Date of Patent: ** May 19, 2020

(54) **KIOSK**

(71) Applicant: **NextgenID, Inc.**, San Antonio, TX (US)

(72) Inventor: **Dario John Berini**, Ashburn, VA (US)

(73) Assignee: **NextgenID, Inc.**, San Antonio, TX (US)

(**) Term: **15 Years**

(21) Appl. No.: **29/644,538**

(22) Filed: **Apr. 18, 2018**

Related U.S. Application Data

(60) Continuation of application No. 29/588,562, filed on Dec. 21, 2016, now Pat. No. Des. 818,464, which is

(Continued)

(51) **LOC (12) Cl.** **14-02**

(52) **U.S. Cl.**
USPC **D14/307**

(58) **Field of Classification Search**
USPC D14/302–307, 900–902; D13/163; D20/10; D21/332, 325, 369, 370;

(Continued)

(56) **References Cited**

U.S. PATENT DOCUMENTS

4,614,378 A 9/1986 Picou
5,375,168 A 12/1994 Kudelski

(Continued)

FOREIGN PATENT DOCUMENTS

EP 1744264 1/2007
JP 2007/132678 5/2007

(Continued)

OTHER PUBLICATIONS

"CBES Multimodal Biometric Enrollment Station." 3M Cogent, Inc. [online], [retrieved on Dec. 11, 2012]. Retrieved from the Internet: <URL: http://www.cogentsystems.com/downloads/CBES_sm.pdf>.

(Continued)

Primary Examiner — Austin Murphy
(74) *Attorney, Agent, or Firm* — Shami Messinger PLLC

(57) **CLAIM**

The ornamental design for kiosk, as shown and described.

DESCRIPTION

FIG. **1** is a perspective view of a third embodiment of a kiosk showing our new design.
FIG. **2** is a front elevation view of the kiosk of FIG. **1**.
FIG. **3** is a back elevation view of the kiosk of FIG. **1**.
FIG. **4** is a first side elevation view of the kiosk of FIG. **1**.
FIG. **5** is a second side elevation view of the kiosk of FIG. **1**.
FIG. **6** is a top plan view of the kiosk of FIG. **1**.
FIG. **7** is a bottom plan view of the kiosk of FIG. **1**.
FIG. **8** is a perspective view of a fourth embodiment of a kiosk showing our new design.
FIG. **9** is a front elevation view of the kiosk of FIG. **8**.
FIG. **10** is a back elevation view of the kiosk of FIG. **8**.
FIG. **11** is a first side elevation view of the kiosk of FIG. **8**.
FIG. **12** is a second side elevation view of the kiosk of FIG. **8**.
FIG. **13** is a top plan view of the kiosk of FIG. **8**; and,
FIG. **14** is a bottom plan view of the kiosk of FIG. **8**.
The portions of the drawings shown in broken lines represent environmental structure and form no part of the claimed design.

1 Claim, 8 Drawing Sheets

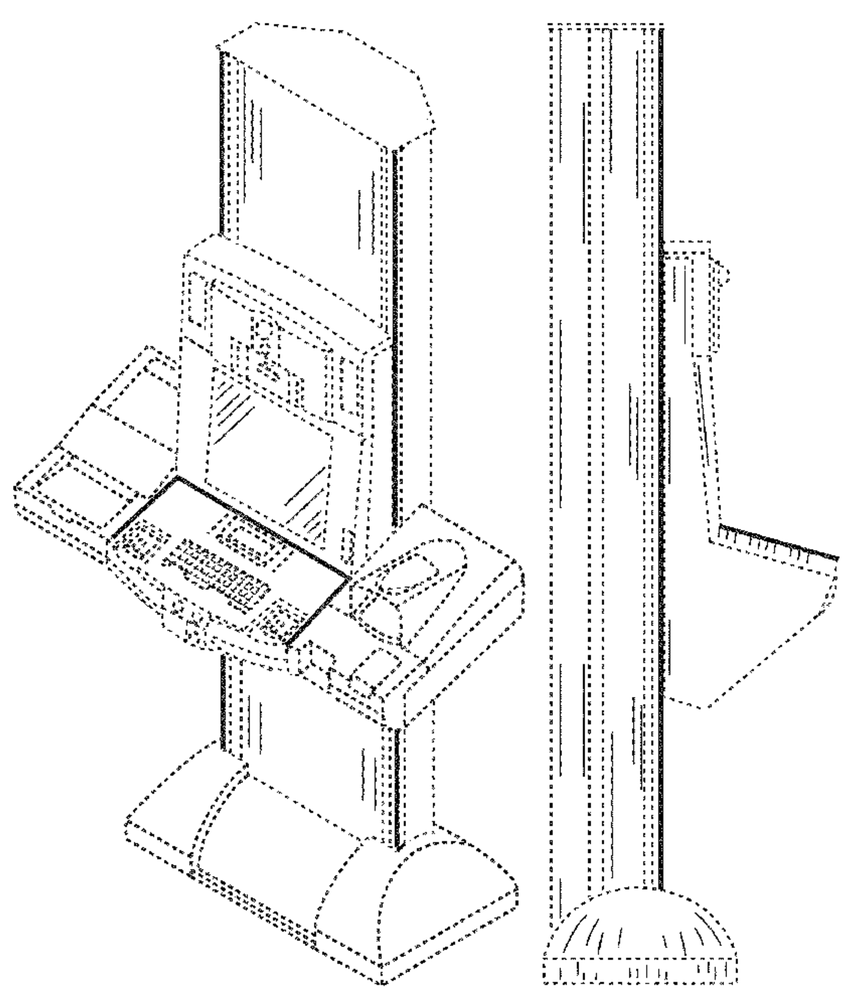

Related U.S. Application Data

a continuation of application No. 29/566,270, filed on May 27, 2016, now Pat. No. Des. 778,276, which is a division of application No. 29/541,378, filed on Oct. 2, 2015, now Pat. No. Des. 760,711, which is a division of application No. 29/487,791, filed on Apr. 11, 2014, now Pat. No. Des. 742,870, which is a continuation of application No. 13/475,625, filed on May 18, 2012, now Pat. No. 9,256,719.

(58) **Field of Classification Search**

USPC D99/28; D6/397, 466; 194/206; 361/679.01, 679.02, 679.04, 679.21, 361/679.57, 725

CPC G06Q 20/18; G06Q 20/10; G06Q 20/123; G06Q 20/20; G06Q 30/02; G06Q 30/06; A47F 9/047

See application file for complete search history.

(56) **References Cited**

U.S. PATENT DOCUMENTS

6,012,049	A	1/2000	Kawan	
6,694,433	B1	2/2004	Kolouch	
7,079,653	B2	7/2006	Scheidt	
7,095,852	B2	8/2006	Wack	
7,212,632	B2	5/2007	Scheidt	
7,278,026	B2	10/2007	McGowan	
D573,986	S	7/2008	Sasaki	
D590,387	S	4/2009	Chen	
D591,078	S	4/2009	Singler	
D605,189	S	12/2009	Kuroda	
D605,191	S	12/2009	Kuroda	
D617,575	S	6/2010	Dreyer	
7,738,660	B2	6/2010	Scheidt	
7,817,800	B2	10/2010	Wack	
D628,742	S	12/2010	Hsu	
7,974,410	B2	7/2011	Scheidt	
8,077,870	B2	12/2011	Wack	
8,233,785	B1	7/2012	Surma	
D671,595	S	11/2012	O'Hara	
D695,285	S	12/2013	Smith	
D695,733	S	12/2013	Damhuis	
D702,675	S	4/2014	Jones	
D707,012	S	6/2014	Swaine	
D707,674	S	6/2014	Daniel	
D708,676	S	7/2014	Ballman	
D717,784	S	11/2014	Collins	
D721,695	S	1/2015	Birgeoglu	
D721,696	S	1/2015	Birgeoglu	
D723,025	S	2/2015	Birgeoglu	
D723,538	S	3/2015	Catoe	
D726,706	S	4/2015	Kraft	
D727,307	S	4/2015	Kraft	
D732,520	S	6/2015	Themann	
D732,522	S	6/2015	Chadbourne	
D742,870	S	11/2015	Berini	
D743,956	S	11/2015	Kraft	
D751,061	S	3/2016	Berini	
D752,032	S	3/2016	Taylor	
D760,711	S	7/2016	Berini	
D762,635	S	8/2016	Szeredi	
D769,864	S	10/2016	Hoffmann	
D778,276	S	2/2017	Berini	
D788,098	S	5/2017	Thornton	
D795,242	S	8/2017	Birgeoglu	
D799,470	S	10/2017	Brown	
D799,471	S	10/2017	Brown	
D800,715	S	10/2017	Kane	
D805,065	S	12/2017	Taylor	
D815,628	S *	4/2018	Berini	D14/307
D818,464	S *	5/2018	Berini	D14/307
D829,706	S *	10/2018	Berini	D14/307
D836,625	S *	12/2018	Szeredi	D14/307
D854,538	S *	7/2019	Szeredi	D14/307
D870,721	S *	12/2019	Vasi	D14/307
2001/0037301	A1	11/2001	Shepley	
2001/0054148	A1	12/2001	Hoornaert	
2002/0019941	A1	2/2002	Chan	
2002/0026413	A1	2/2002	Wu	
2002/0046086	A1	4/2002	Pletz	
2002/0105665	A1	8/2002	Wasilewski	
2002/0124271	A1 *	9/2002	Herrmann	G06Q 30/02 725/151
2002/0154344	A1	10/2002	Beeman	
2003/0001010	A1	1/2003	Schmidt	
2004/0182921	A1	9/2004	Dickson	
2005/0174613	A1	8/2005	Tan	
2005/0229007	A1	10/2005	Bolle	
2006/0073883	A1	4/2006	Franks	
2006/0213970	A1	9/2006	Trajkovic	
2007/0143341	A1	6/2007	Brownell	
2008/0296374	A1	12/2008	Gonen	
2009/0034803	A1	2/2009	Matos	
2009/0130905	A1	5/2009	Wang	
2009/0192938	A1	7/2009	Amos	
2009/0235086	A1	9/2009	Lai	
2009/0289104	A1 *	11/2009	Yoneda	G06F 1/16 235/375
2010/0290668	A1	11/2010	Friedman	
2010/0329301	A1	12/2010	Pang	
2011/0025074	A1	2/2011	Reznar	
2011/0178930	A1	7/2011	Scheidt	
2011/0192681	A1 *	8/2011	Johnson	A47F 10/02 186/52
2012/0087643	A1	4/2012	Paramadilok	
2012/0293642	A1 *	11/2012	Berini	G06F 21/32 348/77
2013/0215275	A1 *	8/2013	Berini	G06F 21/32 348/150
2013/0226632	A1	8/2013	Gilbert	

FOREIGN PATENT DOCUMENTS

JP	2009/175745	8/2009
WO	WO 99/30267	6/1999

OTHER PUBLICATIONS

"Law Enforcement Product Overview." 3M Cogent, Inc. [online], [retrieved on Dec. 11, 2012]. Retrieved from the Internet: <URL: http://www.cogentsystems.com/downloads/LE_Overview.pdf>.

"VB E-Pass® Kiosk" Vision-Box [online], [retrieved on Dec. 11, 2012]. Retrieved from the Internet: <URL: http://www.vision-box.com/solutions/vbepass/>.

"VB E-Pass® Desktop" Vision-Box [online], [retrieved on Dec. 11, 2012]. Retrieved from the Internet: <URL: http://www.vision-box.com/solutions/vbepassdesktop/>.

"VB E-Pass® Portable" Vision-Box [online], [retrieved on Dec. 11, 2012]. Retrieved from the Internet: <URL: http://www.vision-box.com/solutions/mobile-vbepass/>.

"VB E-Pass® Dispenser" Vision-Box [online], [retrieved on Dec. 11, 2012]. Retrieved from the Internet: <URL: http://www.vision-box.com/solutions/vb-i-dispenser/.

"VB I-Match" Vision-Box [online], [retrieved on Dec. 11, 2012]. Retrieved from the Internet: <URL: http://www.vision-box.com/solutions/vb-i-match/>.

"VB Sentryspider" Vision-Box [online], [retrieved on Dec. 11, 2012]. Retrieved from the Internet: <URL: http://www.vision-box.com/solutions/vb-sentryspider/>.

International Search Report dated Nov. 23, 2012 which issued in International Patent Application No. PCT/US2012/038675 (5 pages).

Written Opinion dated Nov. 23, 2012 which issued in International Patent Application No. PCT/US2012/038675 (5 pages).

Michaels, Ross J., Kevin C. Mangold, Matthew L. Aronoff, Kayee Kwong, and Karen Marshall, Specification for WS-Biometric Devices (WS-BD). Mar. 14, 2012. 1-123.

* cited by examiner

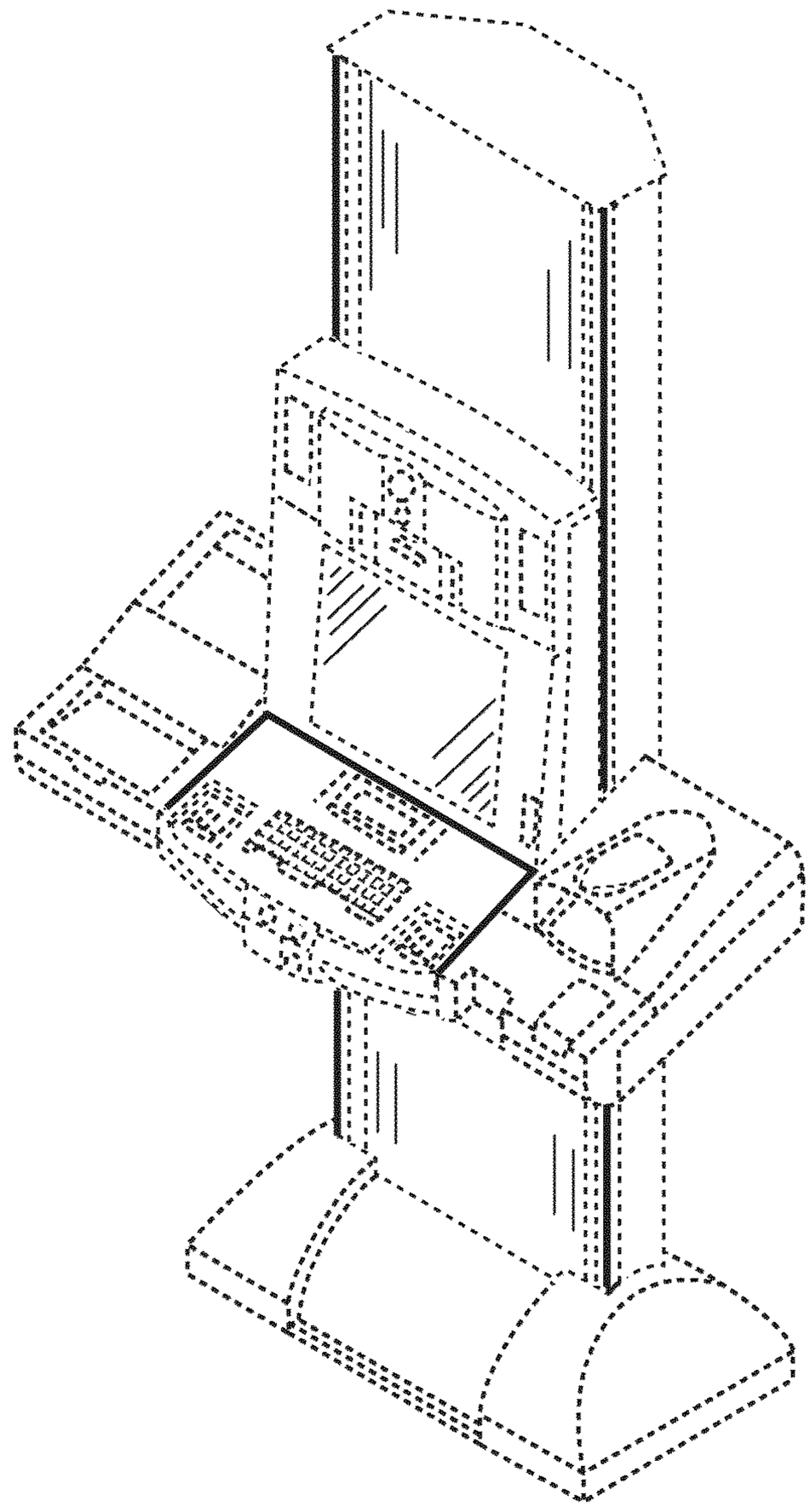

FIG. 1

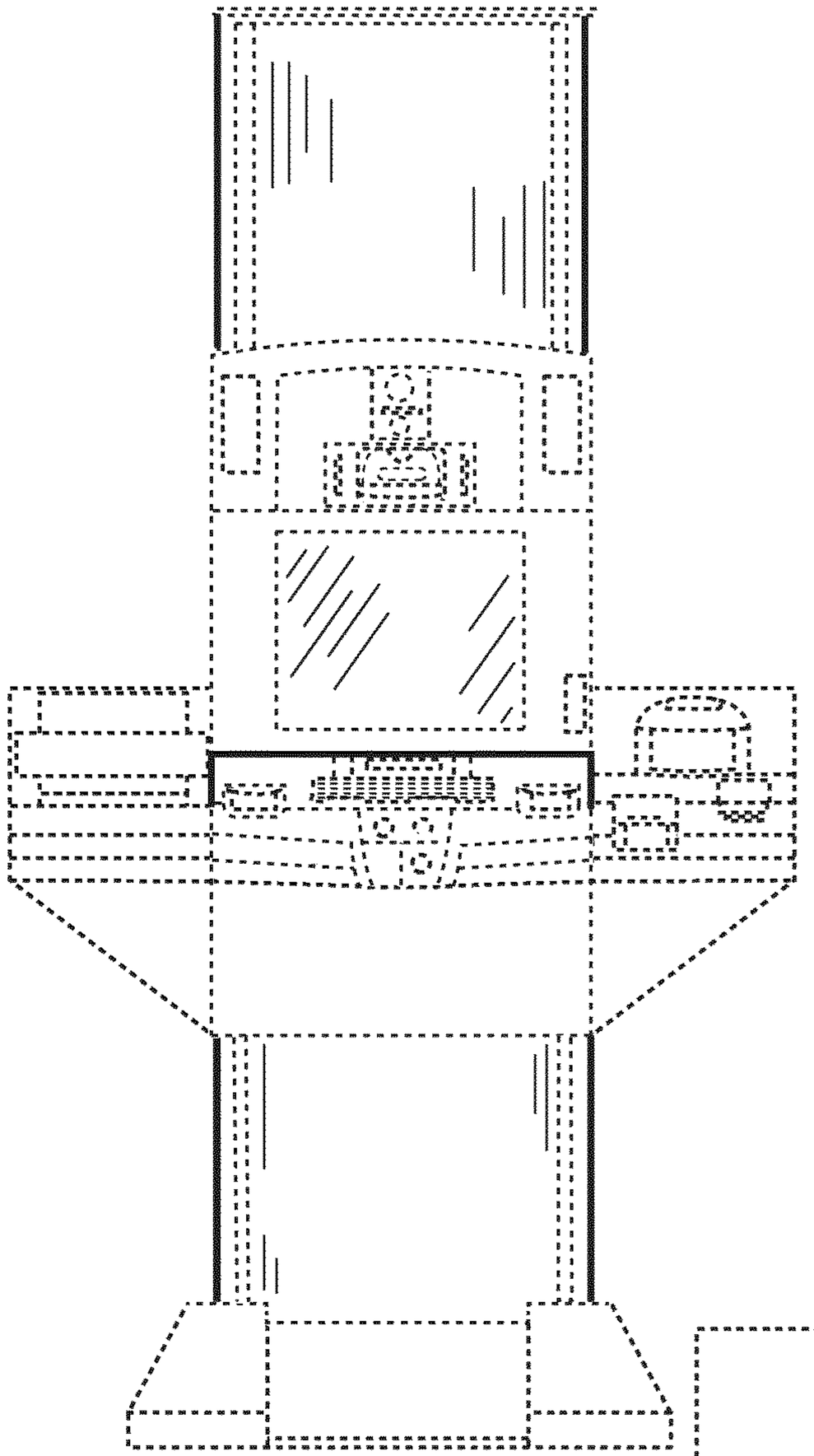

FIG. 2

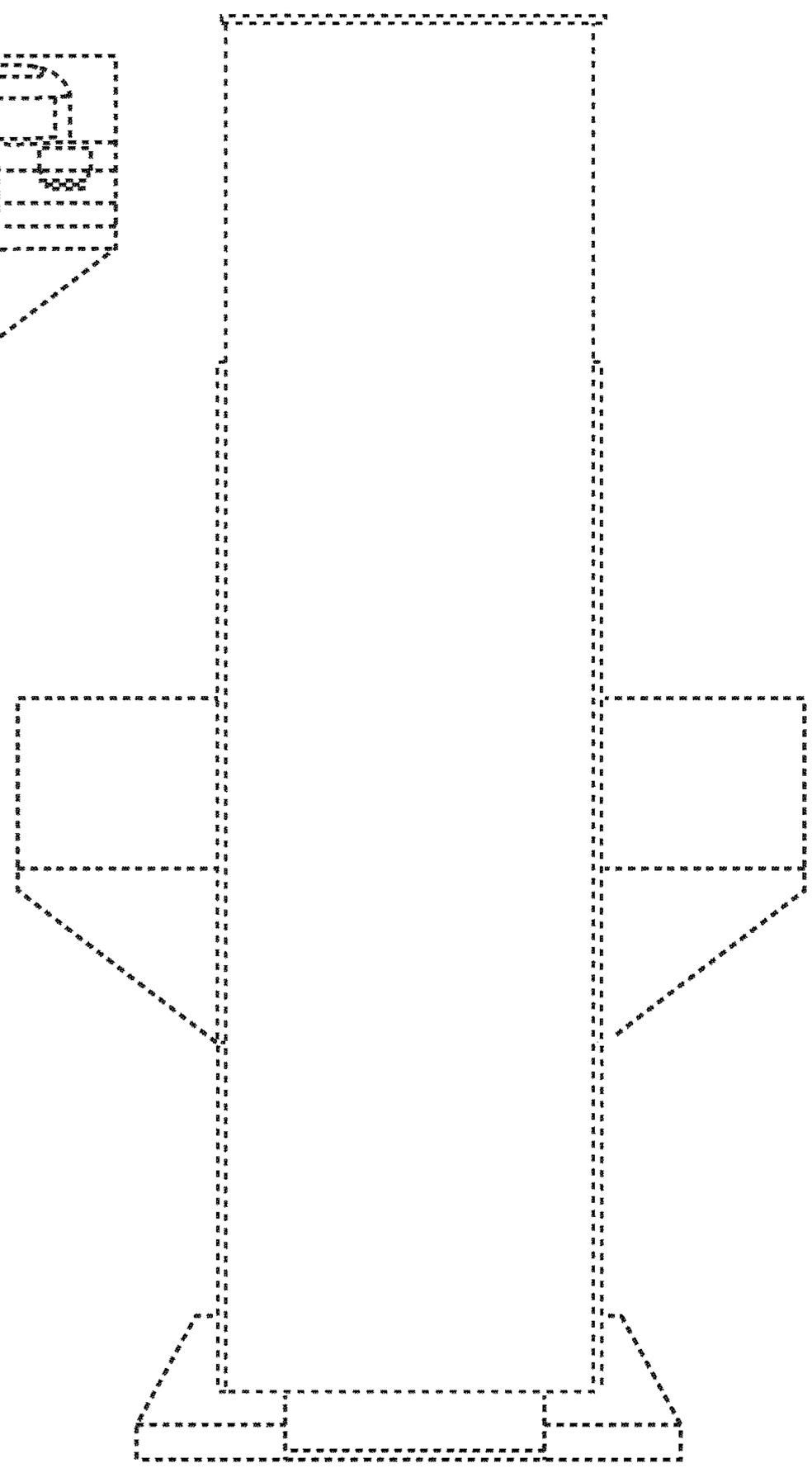

FIG. 3

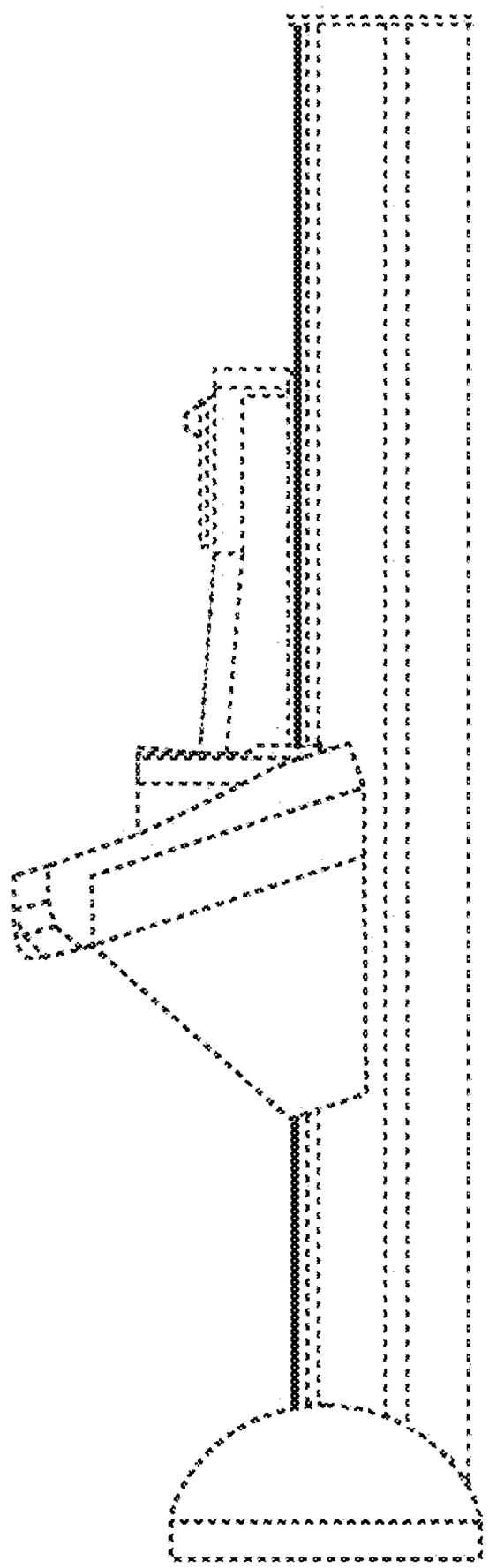

FIG. 4

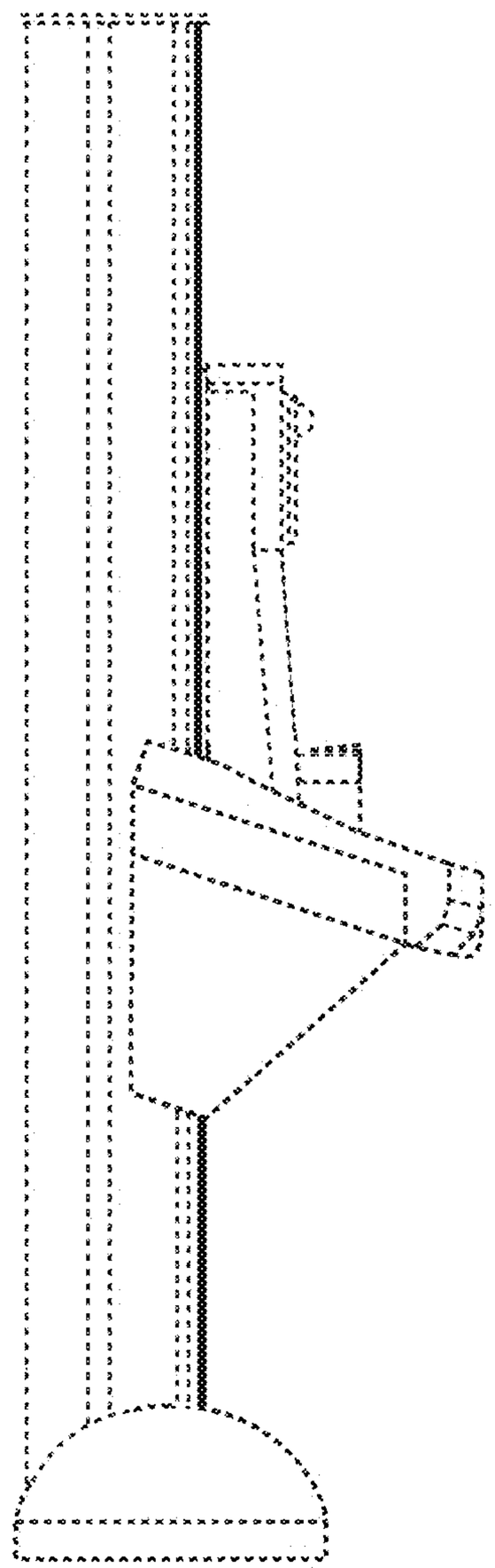

FIG. 5

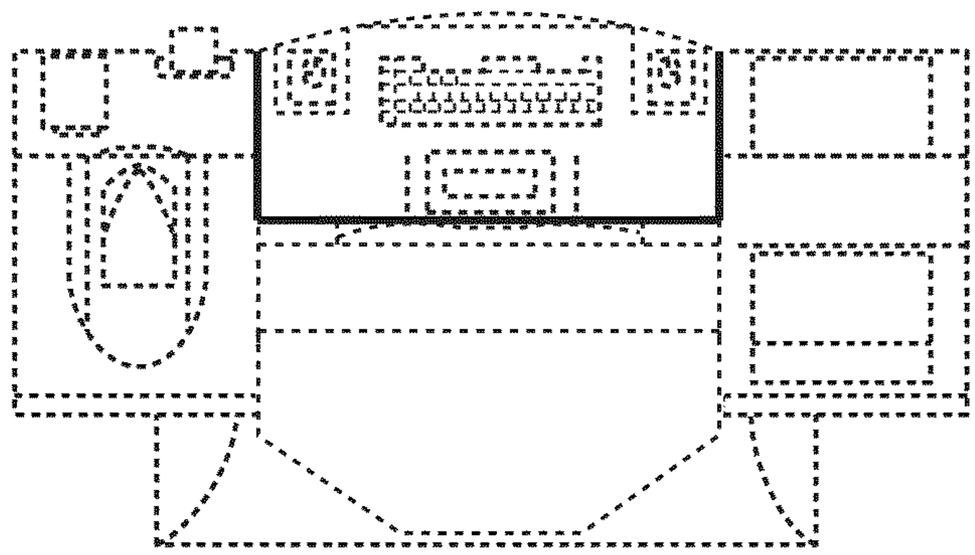

FIG. 6

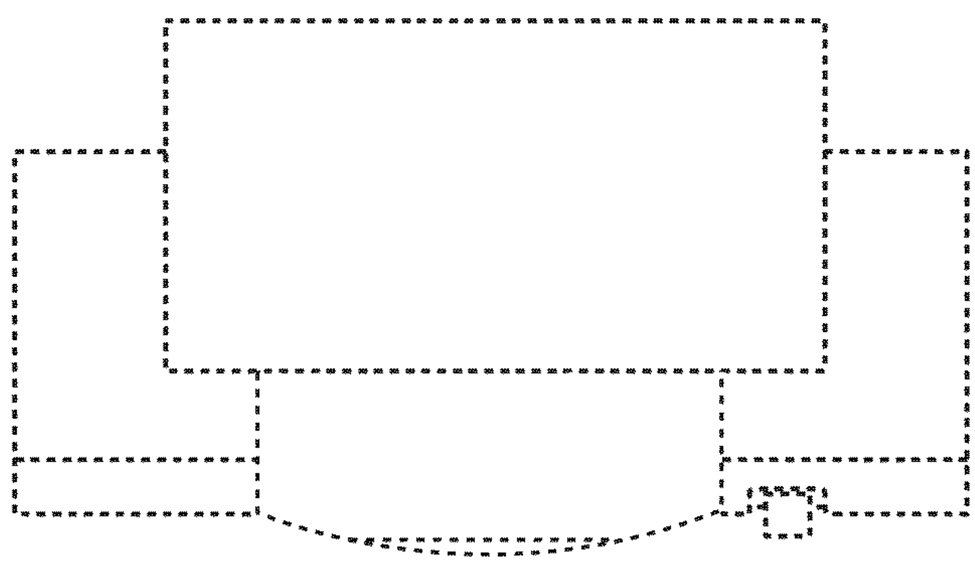

FIG. 7

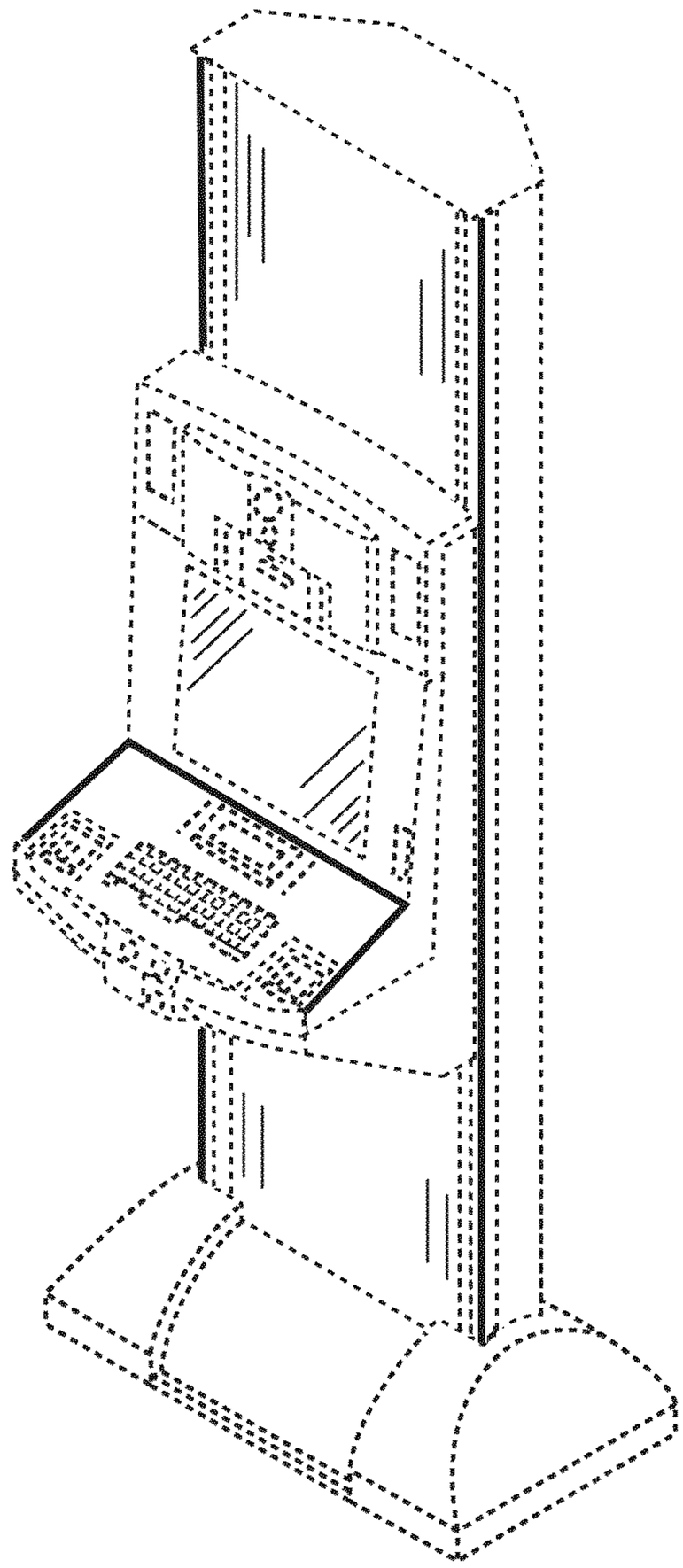

FIG. 8

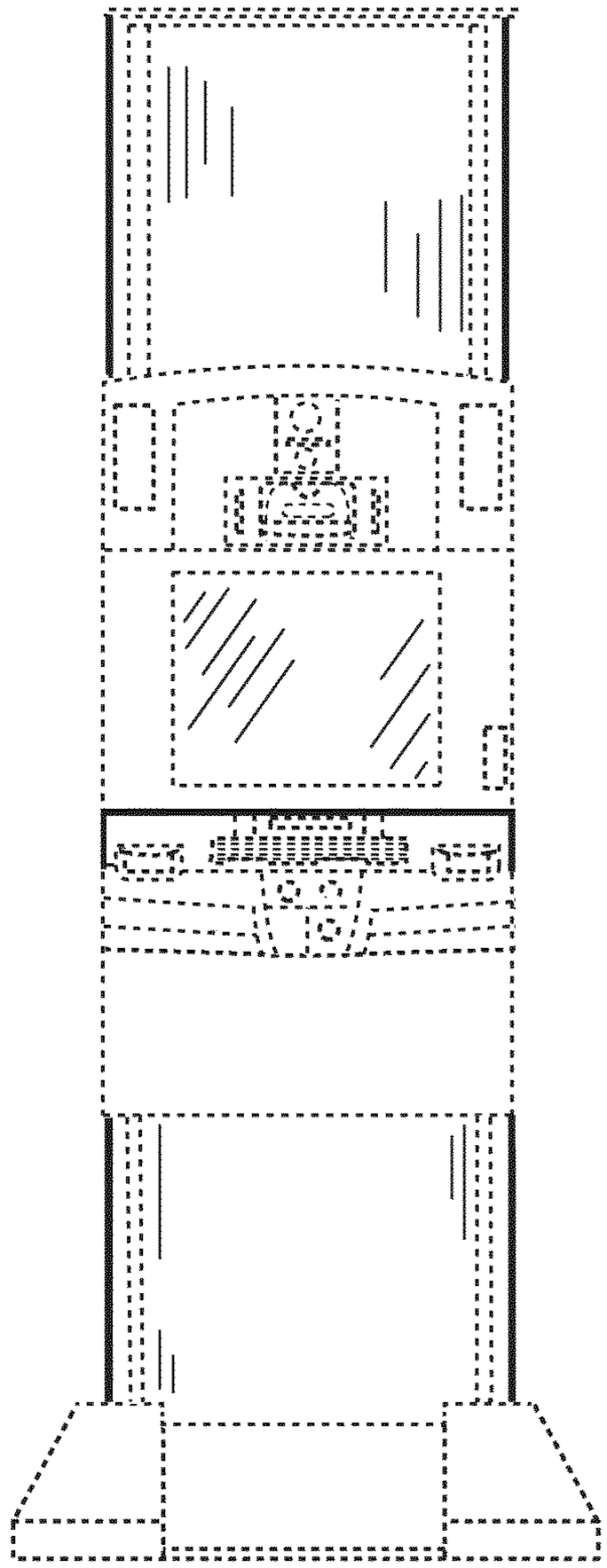

FIG. 9

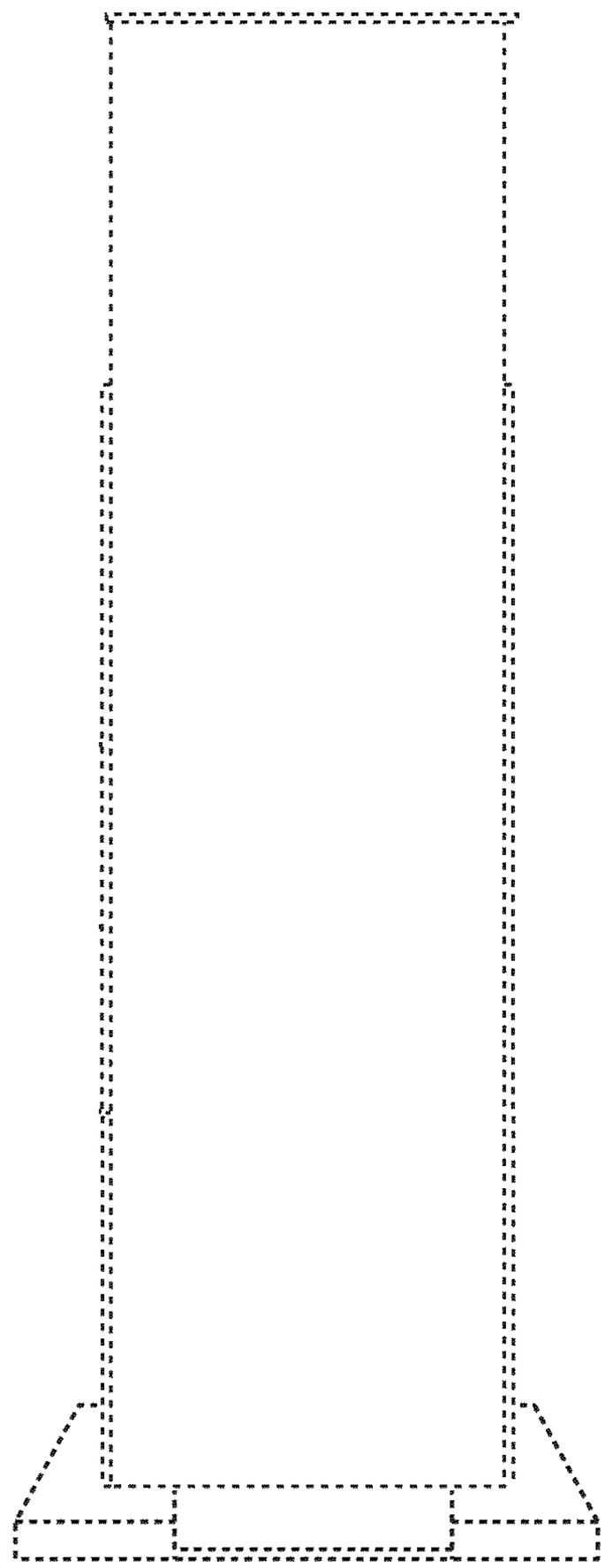

FIG. 10

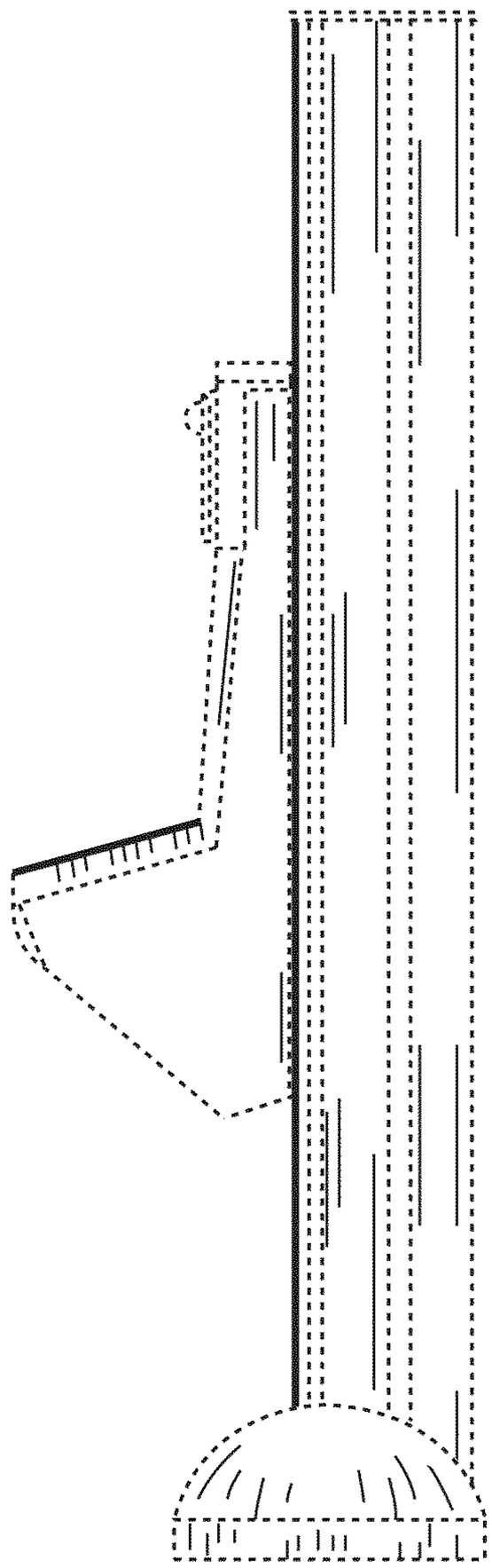

FIG. 11

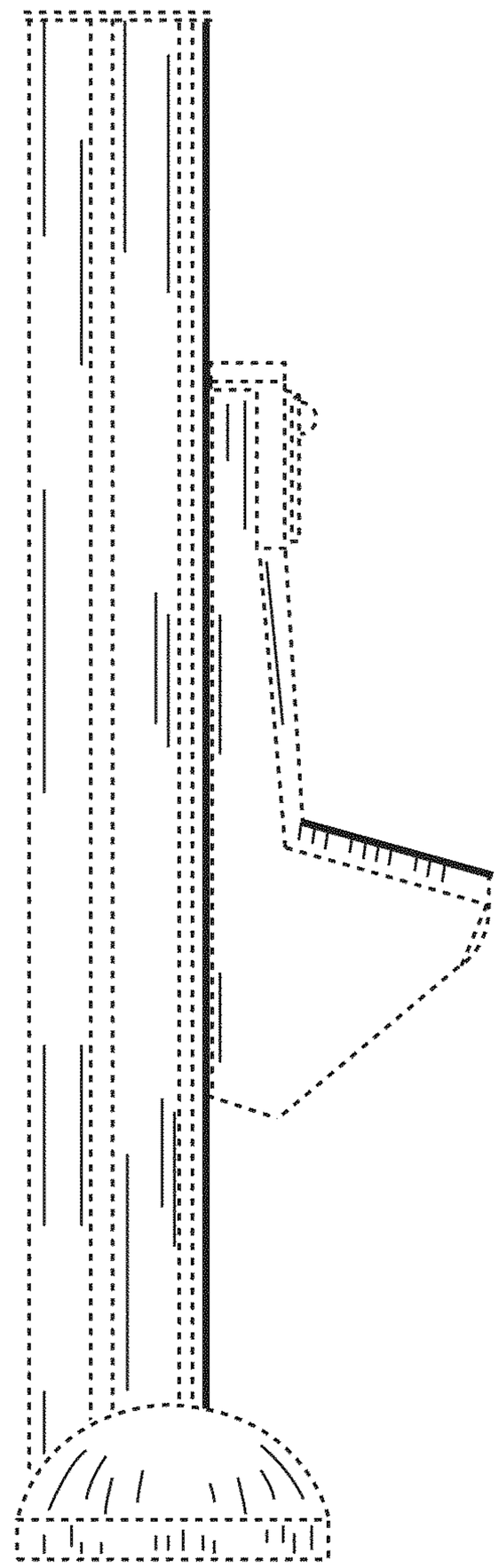

FIG. 12

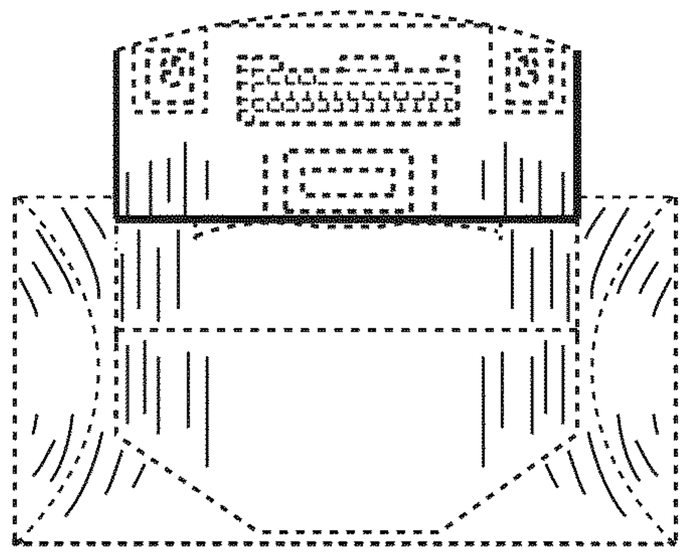

FIG. 13

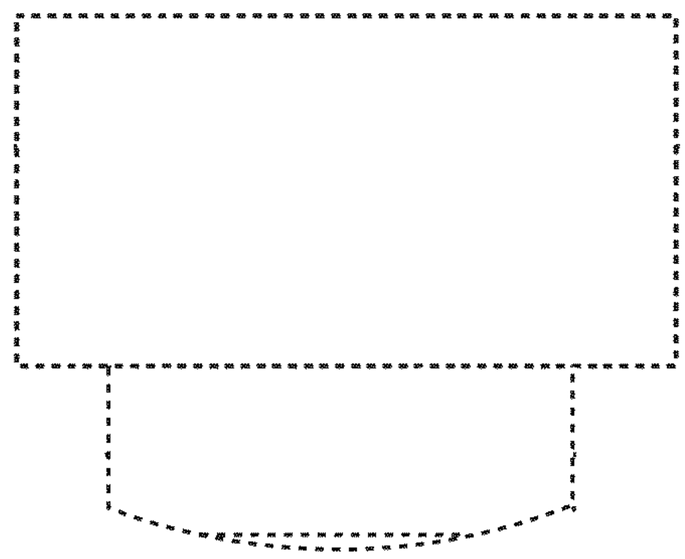

FIG. 14