US00D883929S

(12) United States Design Patent
Tanaka

(10) Patent No.: US D883,929 S
(45) Date of Patent: ** May 12, 2020

(54) **POWER TRANSMITTING APPARATUS**

(71) Applicant: **DAIHEN Corporation**, Osaka-shi (JP)

(72) Inventor: **Junichi Tanaka**, Osaka (JP)

(73) Assignee: **DAIHEN Corporation**, Osaka (JP)

(**) Term: **15 Years**

(21) Appl. No.: **29/645,164**

(22) Filed: **Apr. 24, 2018**

(30) **Foreign Application Priority Data**

Oct. 31, 2017 (JP) 2017-024369

(51) **LOC (12) Cl.** **13-03**

(52) **U.S. Cl.**
USPC **D13/123**

(58) **Field of Classification Search**
USPC D13/101, 103, 107, 108, 110, 112–114, D13/118, 123, 133, 152–154, 173, 178, D13/184, 199
CPC H01F 5/00; H01R 39/00; H02J 5/02; H02J 5/00; H02J 50/10; H02J 50/12; H02J 50/90; H02J 7/00; H02J 7/02; H02J 7/025; H04B 5/00
See application file for complete search history.

(56) **References Cited**

U.S. PATENT DOCUMENTS

D294,231 S * 2/1988 Cameron, Jr. D10/106.6
D294,344 S * 2/1988 Troutman D13/158
D365,528 S * 12/1995 Shibuya D10/81
D477,276 S * 7/2003 Katsumoto D13/103
D508,899 S * 8/2005 Suzuki D14/125
D518,002 S * 3/2006 Johanneck D13/171
D597,535 S * 8/2009 Brennwald D14/240
D751,515 S * 3/2016 Paredes D13/168
D766,750 S * 9/2016 Fadell D10/106.3
D786,791 S * 5/2017 Jeong D13/108
D788,603 S * 6/2017 Liu D10/102
D796,434 S * 9/2017 Li D13/108
D816,606 S * 5/2018 Georgiades D13/108
D826,938 S * 8/2018 Son D14/388
D830,869 S * 10/2018 Siminoff D10/106.1
D831,585 S * 10/2018 Lee D13/162
10,152,866 B2 * 12/2018 Kraz G08B 17/10
D838,190 S * 1/2019 Lai D10/53
(Continued)

OTHER PUBLICATIONS

Daihen D-Broad Core, dated Sep. 27, 2016, [online], [site visited Oct. 23, 2019]. Available from Internet, URL: https://www.youtube.com/watch?v=wknbZCwjPJ8 (Year: 2016).*
(Continued)

Primary Examiner — Angela J Lee
Assistant Examiner — Shawn T Gingrich
(74) *Attorney, Agent, or Firm* — The Webb Law Firm

(57) **CLAIM**

The ornamental design for a power transmitting apparatus, as shown and described.

DESCRIPTION

FIG. **1** is an upper perspective view of a power transmitting apparatus, showing my new design;
FIG. **2** is a front elevation view thereof;
FIG. **3** is a rear elevation view thereof;
FIG. **4** is a top view thereof;
FIG. **5** is a bottom view thereof;
FIG. **6** is a right side elevation view thereof;
FIG. **7** is a left side elevation view thereof; and,
FIG. **8** is an enlarged cross-sectional view thereof taken along lines **8-8** shown in FIG. **2**.
The portions of the power transmitting apparatus shown in broken lines form no part of the claimed design.
The unshaded surfaces form no part of the claimed design.

1 Claim, 8 Drawing Sheets

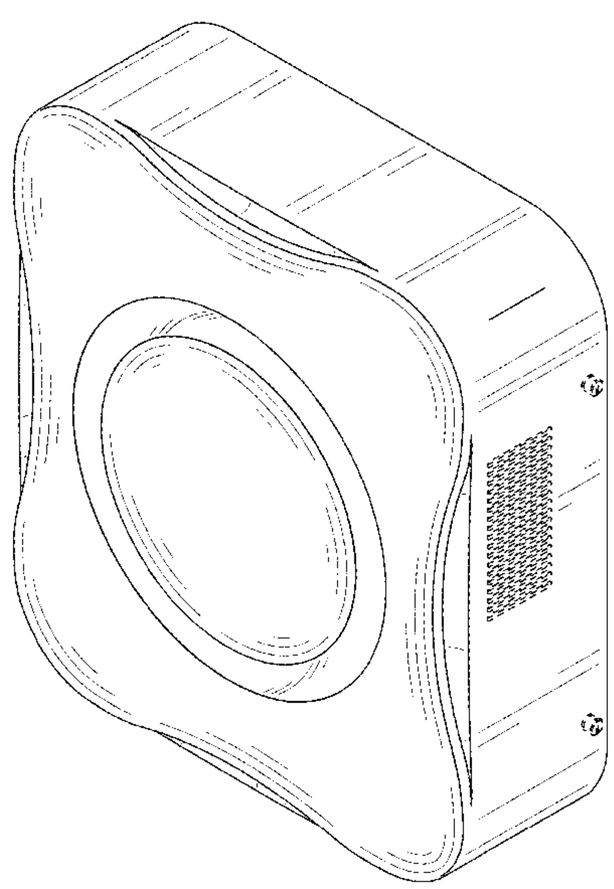

(56) **References Cited**

U.S. PATENT DOCUMENTS

D845,897	S	*	4/2019	Kim	D13/108
D849,006	S	*	5/2019	Pang	D14/433
D852,740	S	*	7/2019	Aitzetmueller	D13/110
D858,436	S	*	9/2019	Chen	D13/108
D859,415	S	*	9/2019	Liao	D14/434
D860,829	S	*	9/2019	Yun	D10/53
2014/0160349	A1	*	6/2014	Huang	H04N 5/2251 348/375

OTHER PUBLICATIONS

Wi-Charge harnesses light to free Amazon Echo Dot and Google Home Mini smart speakers from power cords, dated Nov. 16, 2018, [online], [site visited Oct. 23, 2019]. Available from Internet, URL: https://www.techhive.com/article/3321662/wi-charge-to-free-amazon-echo-dot-from-its-power-cord.html (Year: 2018).*

* cited by examiner

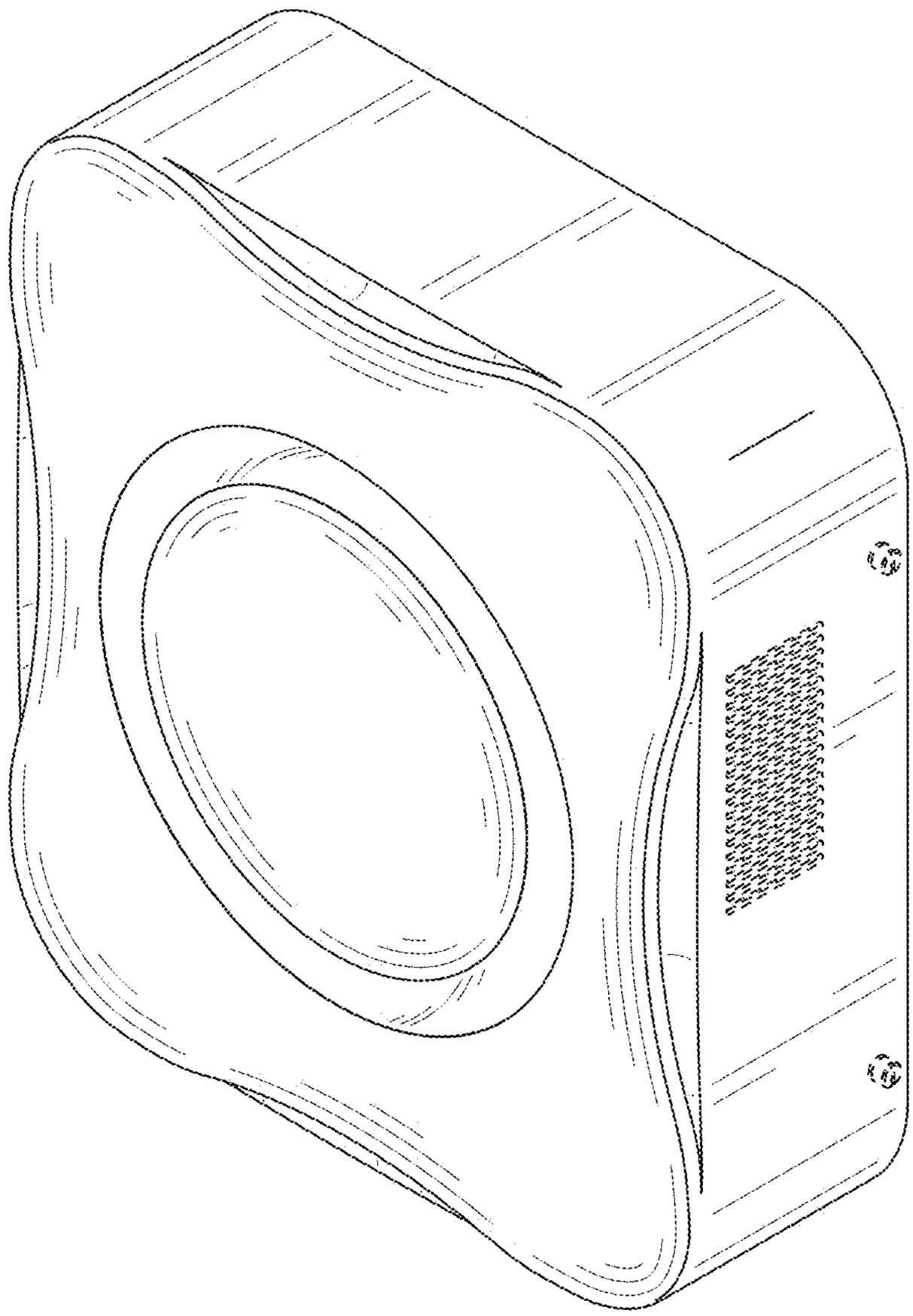

FIG. 1

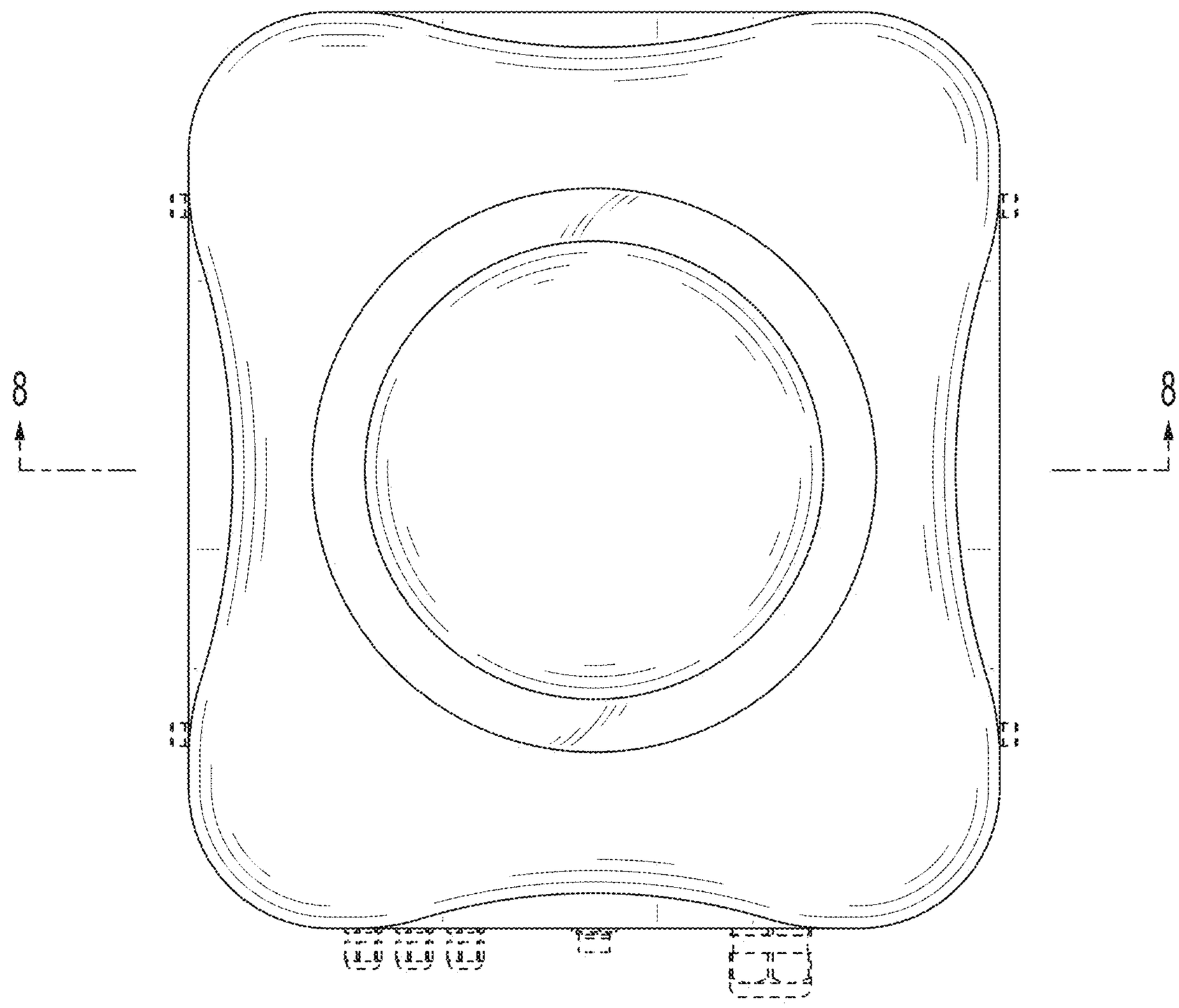

FIG. 2

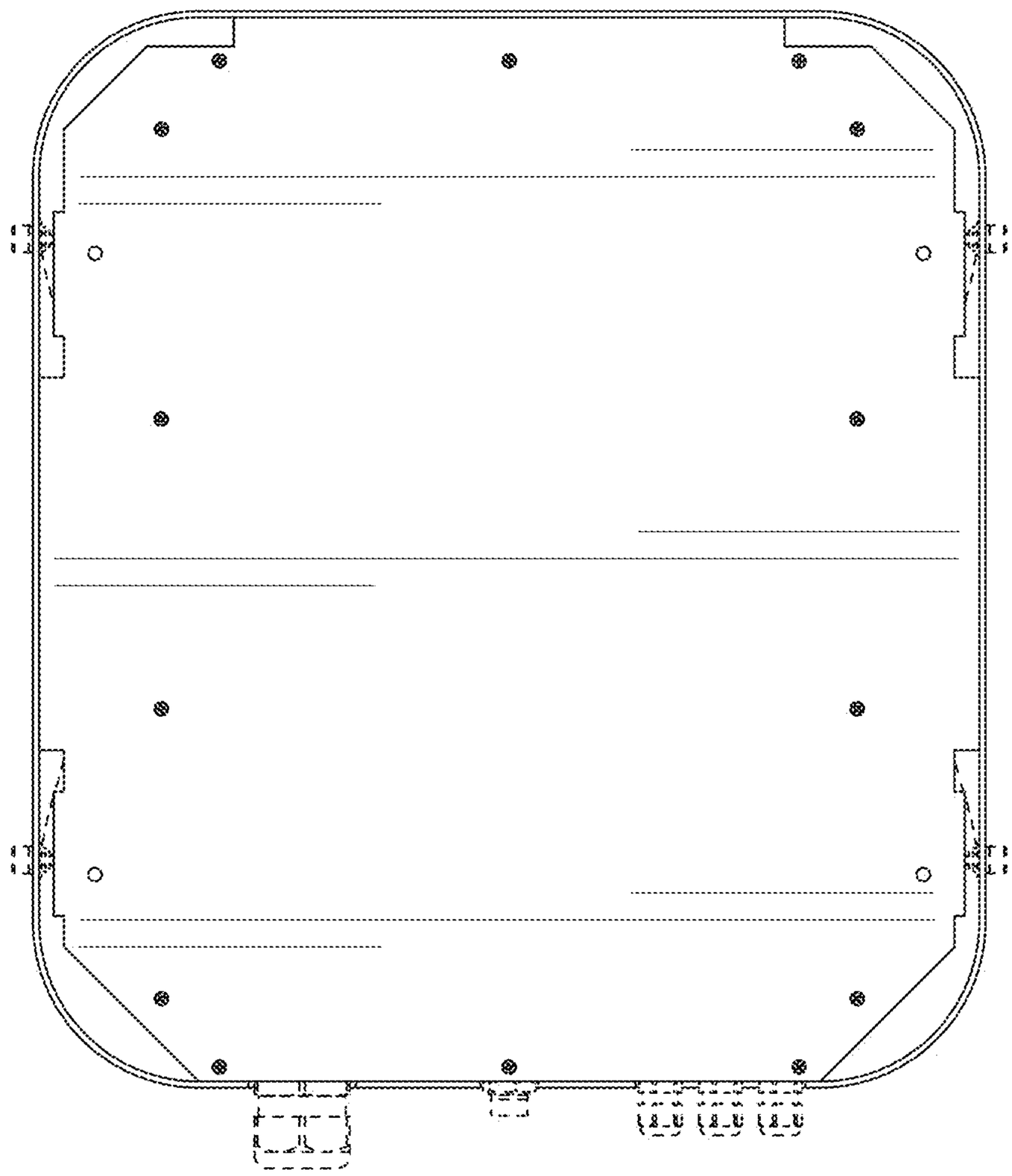

FIG. 3

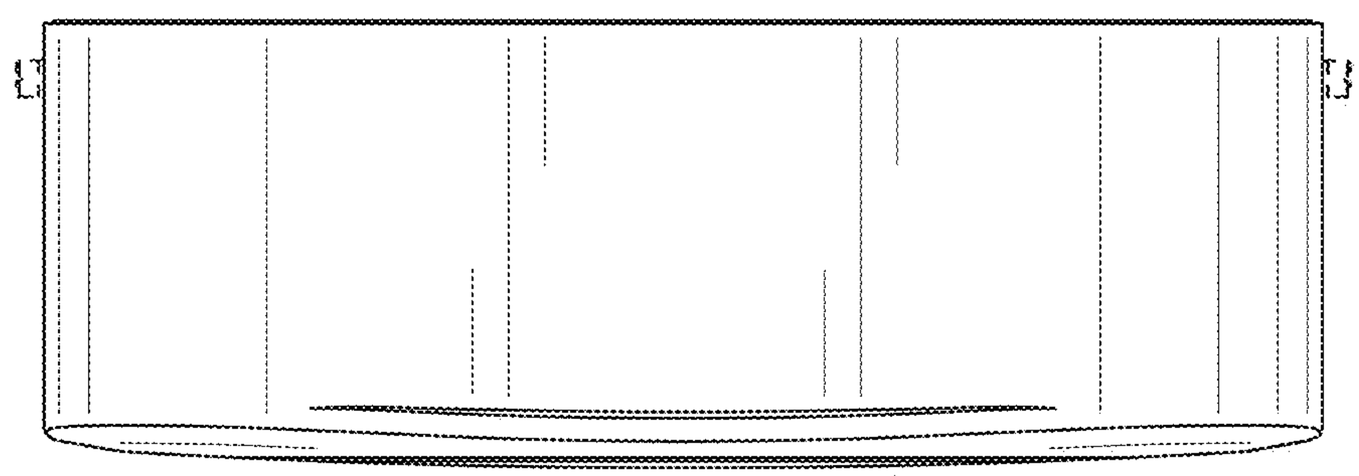

FIG. 4

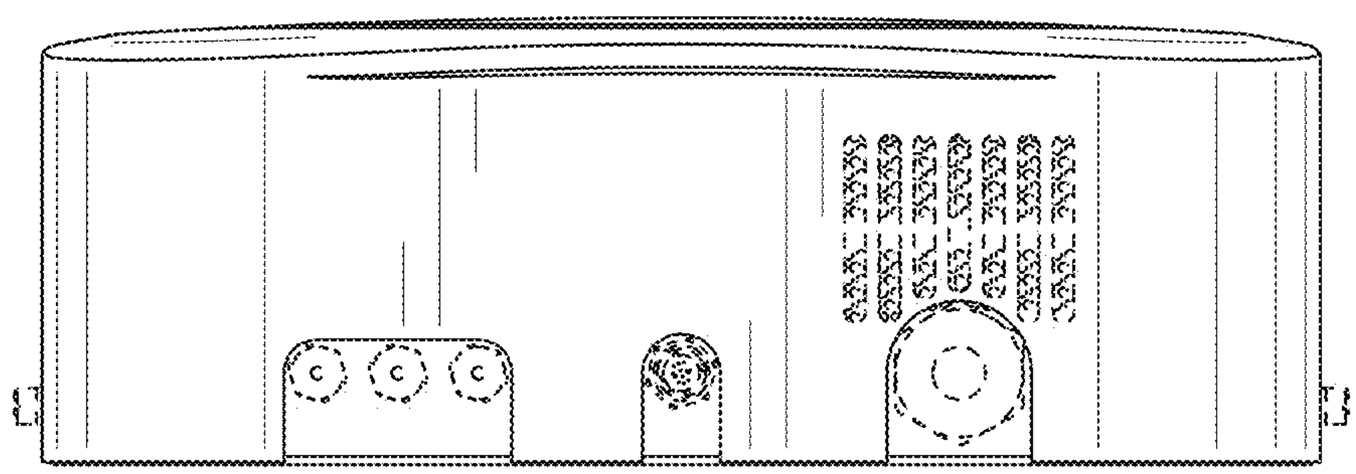

FIG. 5

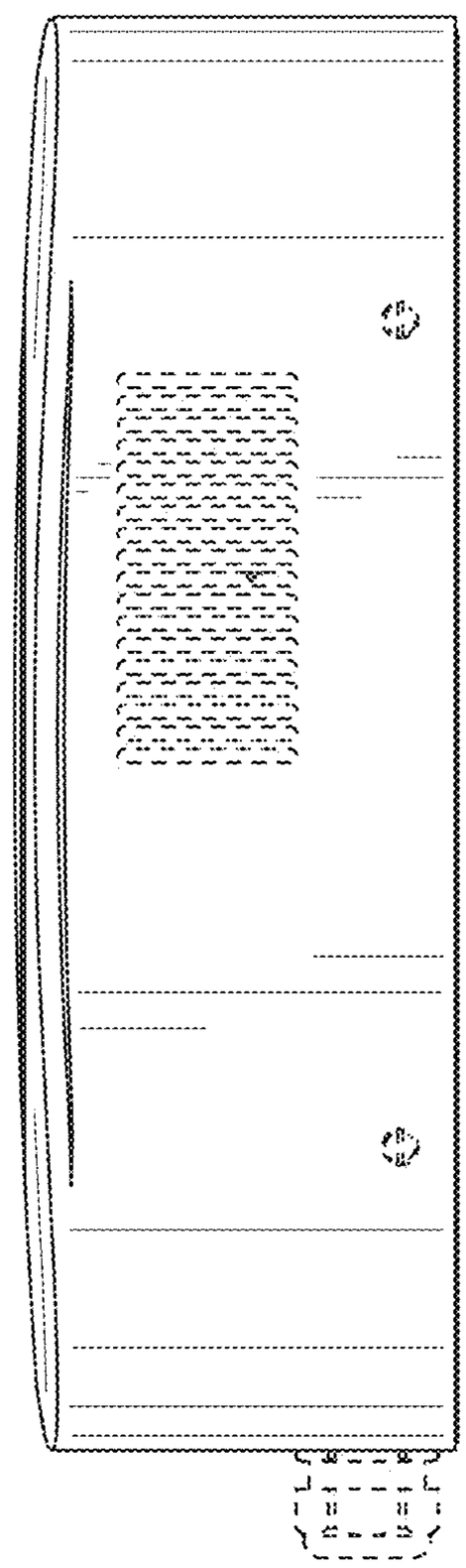

FIG. 6

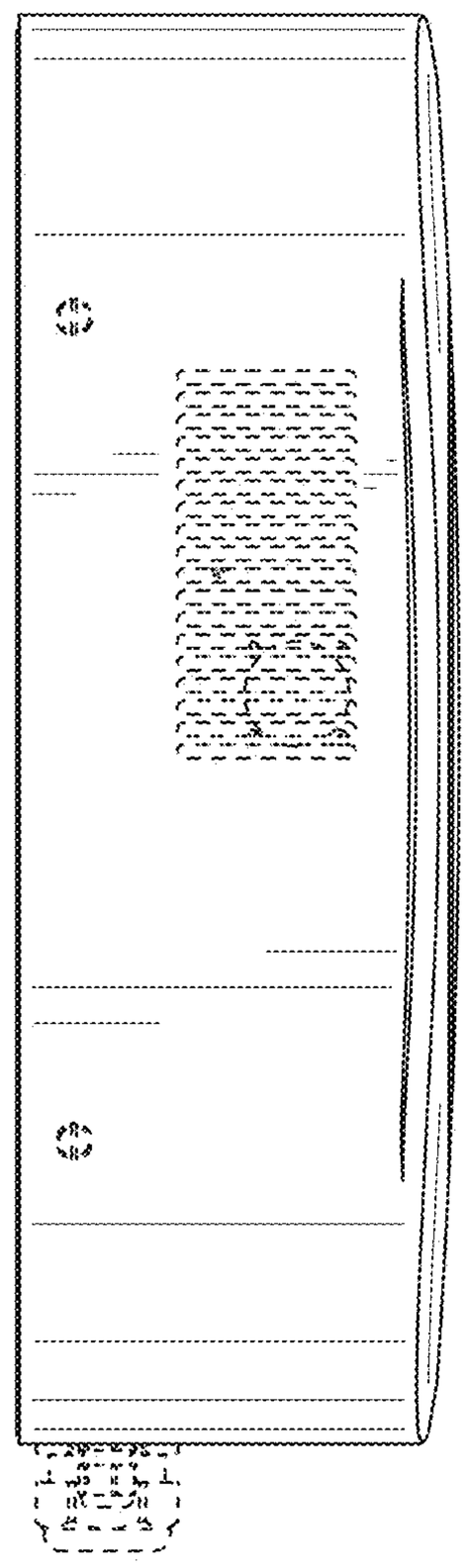

FIG. 7

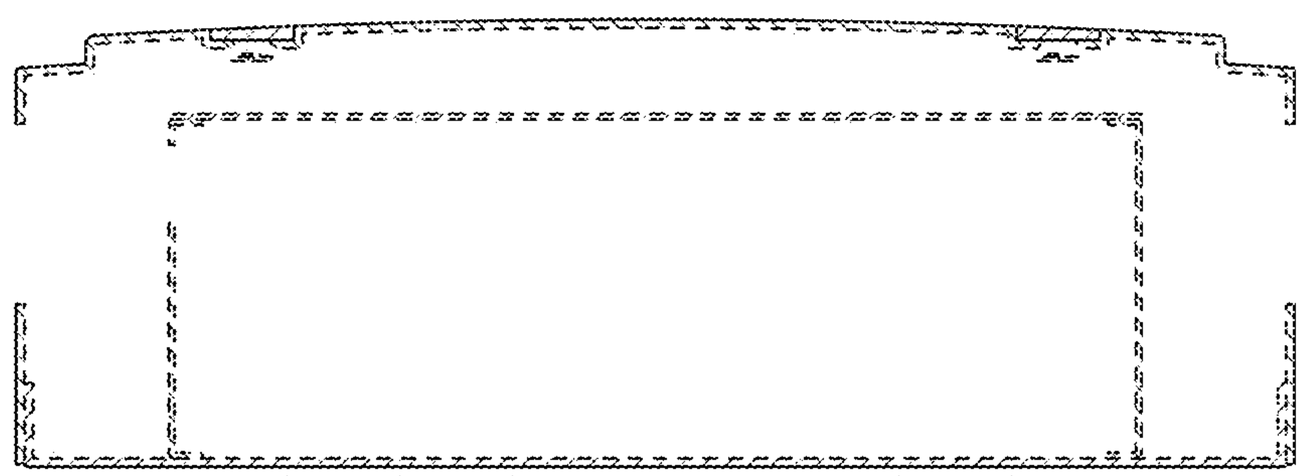

FIG. 8