US00D882817S

(12) United States Design Patent

Norton et al.

(10) Patent No.: US D882,817 S
(45) Date of Patent: ** Apr. 28, 2020

(54) **SAMPLE CONTAINER**

(71) Applicant: **Becton, Dickinson and Company**, Franklin Lakes, NJ (US)

(72) Inventors: **Pierce O. Norton**, Los Gatos, CA (US); **Dennis F. Rey**, Livermore, CA (US); **Jeannine K. Funderburk**, Cupertino, CA (US)

(73) Assignee: **BECTON, DICKINSON AND COMPANY**, Franklin Lakes, NJ (US)

(**) Term: **15 Years**

(21) Appl. No.: **29/635,390**

(22) Filed: **Jan. 30, 2018**

(51) **LOC (12) Cl.** **24-02**

(52) **U.S. Cl.**
USPC **D24/224**

(58) **Field of Classification Search**
USPC D24/108, 112, 128–130, 133, 138, 144
CPC B01F 15/0201
See application file for complete search history.

(56) **References Cited**

U.S. PATENT DOCUMENTS

D320,082	S *	9/1991	Wyatt	D24/129
D323,709	S *	2/1992	Wyatt	D24/129
D323,889	S *	2/1992	Wyatt	D24/129
D339,194	S	9/1993	Telang	
5,552,885	A	9/1996	Desjardins et al.	
5,641,457	A	6/1997	Colon	
D380,543	S *	7/1997	Piontek	D24/108
D383,214	S *	9/1997	Brennan	D24/224
5,776,781	A	7/1998	Norton	
D423,670	S *	4/2000	Scheuble	D24/130
6,133,044	A	10/2000	Kanda	
6,149,867	A	11/2000	Hall et al.	
6,263,745	B1	7/2001	Katsumoto	
6,473,171	B1	10/2002	Buttry et al.	
6,780,377	B2	8/2004	Hall et al.	
6,890,487	B1	5/2005	Sklar et al.	
6,947,136	B2	9/2005	Ortyn et al.	
D529,603	S *	10/2006	Knickerbocker	D24/110
7,471,394	B2	12/2008	Padmanabhan et al.	
D584,407	S *	1/2009	Kawamura	D24/130
D588,693	S *	3/2009	Strong	D24/112
D590,935	S *	4/2009	Becker	D24/108
7,553,453	B2	6/2009	Gu et al.	
7,630,063	B2	12/2009	Padmanabhan et al.	
7,777,869	B2	5/2010	Nerin et al.	
D620,075	S *	7/2010	Yamaguchi	D23/209
7,760,351	B2	7/2010	Cox et al.	

(Continued)

FOREIGN PATENT DOCUMENTS

EP	1815231 B1	9/2010
EP	1745275 B1	12/2017
EP	1846748 B1	9/2019

Primary Examiner — Susan Bennett Hattan
Assistant Examiner — Omeed Agilee
(74) *Attorney, Agent, or Firm* — Edward J. Baba; Bret E. Field; Bozicevic, Field & Francis LLP

(57) **CLAIM**

The ornamental design for sample container, as shown and described.

DESCRIPTION

FIG. **1** is a first side view of a sample container;
FIG. **2** is a second side view of the sample container;
FIG. **3** is a third side view of the sample container;
FIG. **4** is a fourth side view of the sample container;
FIG. **5** is a top view of the sample container;
FIG. **6** is a bottom view of the sample container;
FIG. **7** is a bottom perspective view of the sample container; and,
FIG. **8** is a top perspective view of the sample container ap.

1 Claim, 4 Drawing Sheets

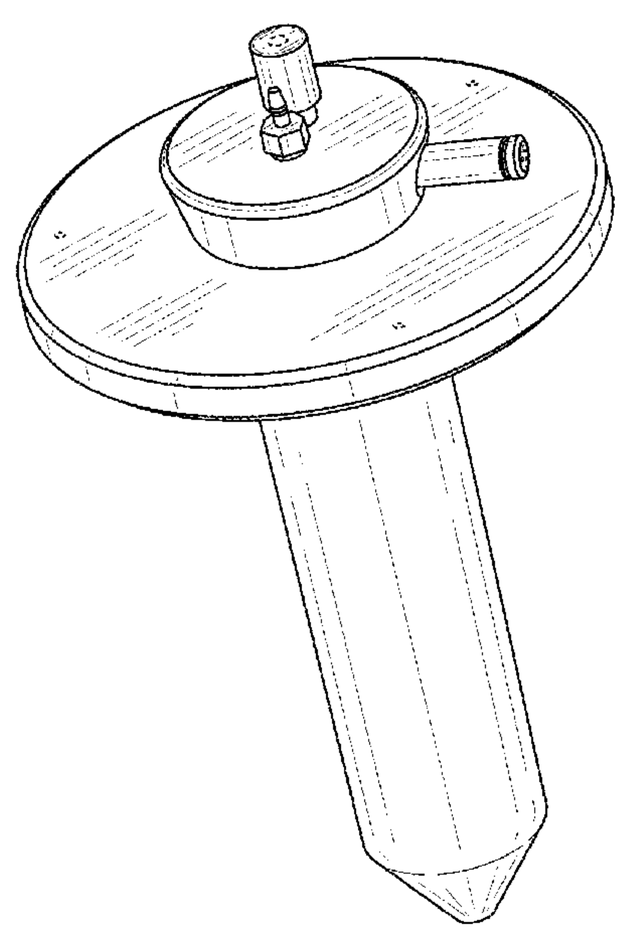

(56) **References Cited**

U.S. PATENT DOCUMENTS

D622,846	S *	8/2010	Frey	D24/138
D627,065	S *	11/2010	Ade	D24/130
7,884,301	B2	2/2011	Kirstein et al.	
7,911,617	B2	3/2011	Padmanabhan et al.	
7,978,329	B2	7/2011	Padmanabhan et al.	
8,004,661	B2	8/2011	Luscher	
8,062,609	B2	11/2011	Krager et al.	
D651,709	S *	1/2012	Zeyfang	D24/127
8,182,767	B2	5/2012	Padmanabhan et al.	
8,277,764	B2	10/2012	Gilbert et al.	
8,323,564	B2	12/2012	Padmanabhan et al.	
D676,567	S	2/2013	Van Den Engh	
8,445,286	B2	5/2013	Bair et al.	
8,610,892	B2	12/2013	Sharpe et al.	
8,637,318	B2	1/2014	Durack et al.	
8,795,500	B2	8/2014	Shinoda	
8,821,791	B2	9/2014	Shibata et al.	
D715,925	S	10/2014	Suzuki	
D717,438	S	11/2014	Lin	
9,040,304	B2	5/2015	Durack et al.	
9,162,229	B2	10/2015	Gaskill-fox et al.	
9,339,850	B2	5/2016	Deshpande et al.	
D759,260	S *	6/2016	Topolovac	D24/215
D777,317	S *	1/2017	Soual	D24/112
9,556,413	B2	1/2017	Venter et al.	
9,784,659	B2	10/2017	Tanase et al.	
D802,150	S	11/2017	Lund	
9,823,252	B2	11/2017	Gilbert et al.	
9,857,286	B2	1/2018	Yosuke et al.	
2004/0025602	A1	2/2004	Norton	
2004/0062685	A1	4/2004	Norton	
2004/0209266	A1 *	10/2004	Squirrell	B01F 15/0201 435/6.11
2011/0217723	A1	9/2011	Durack	
2011/0271746	A1	11/2011	Shinoda	
2011/0284378	A1	11/2011	Shinoda	
2017/0299493	A1	10/2017	Norton	

* cited by examiner

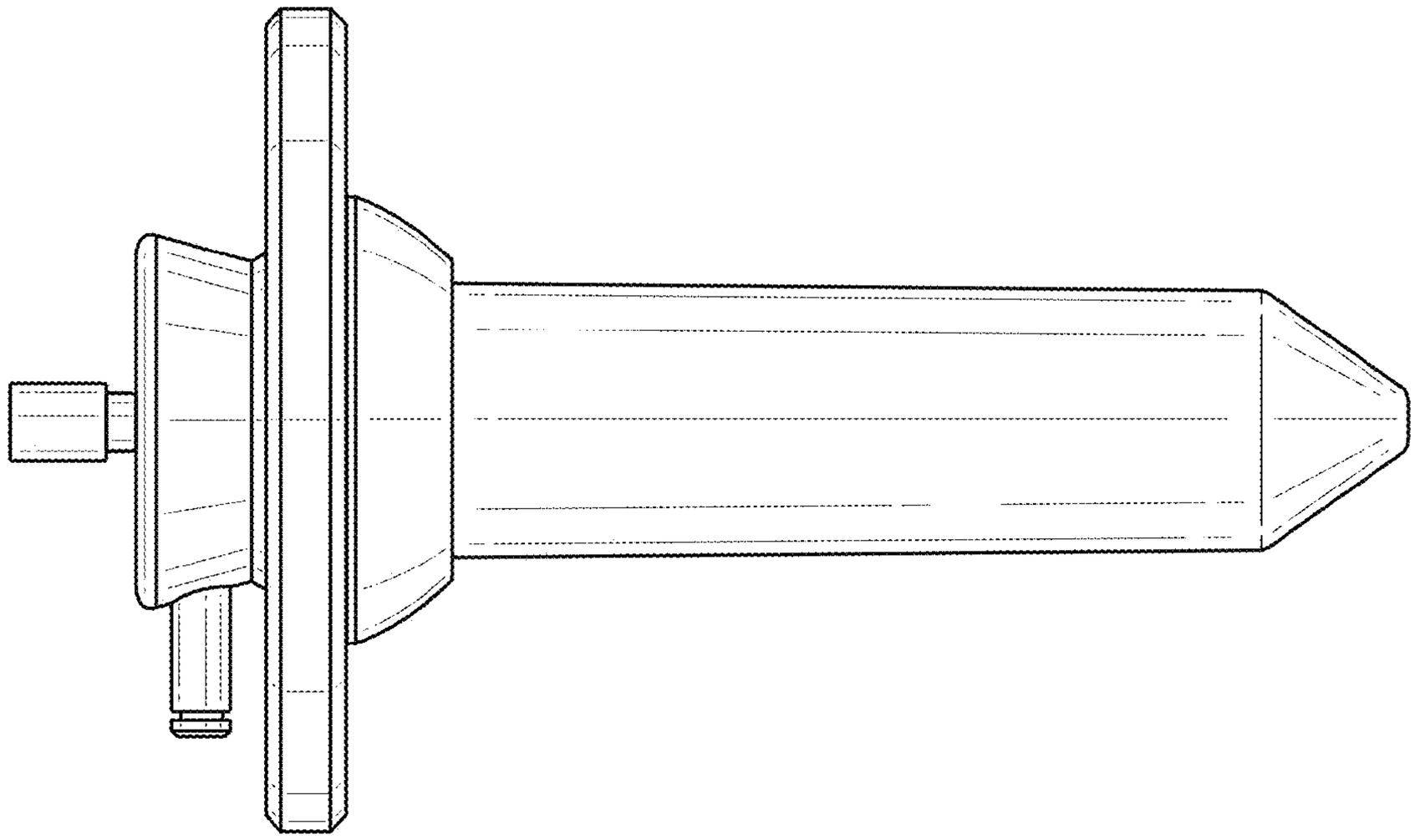

FIG. 2

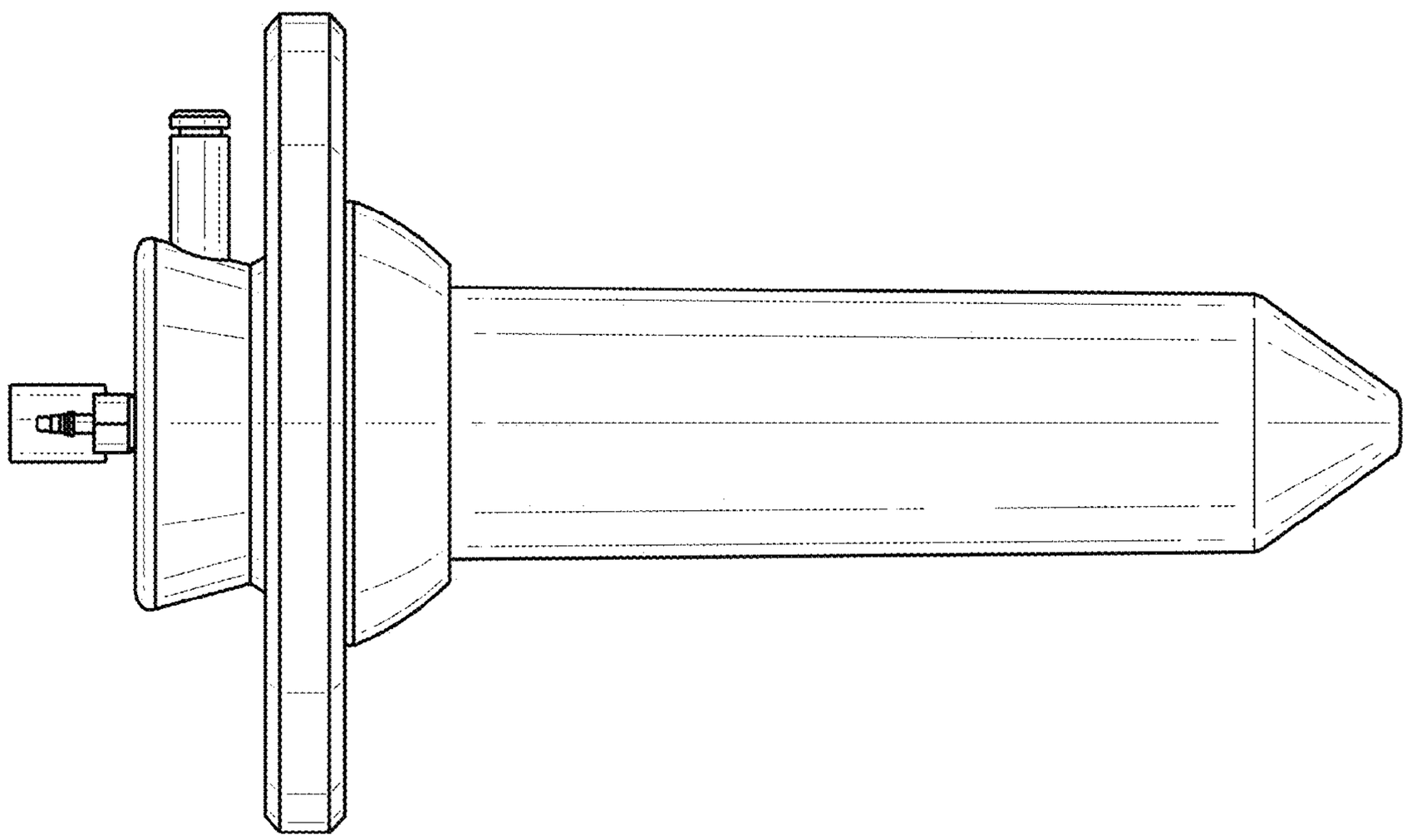

FIG. 1

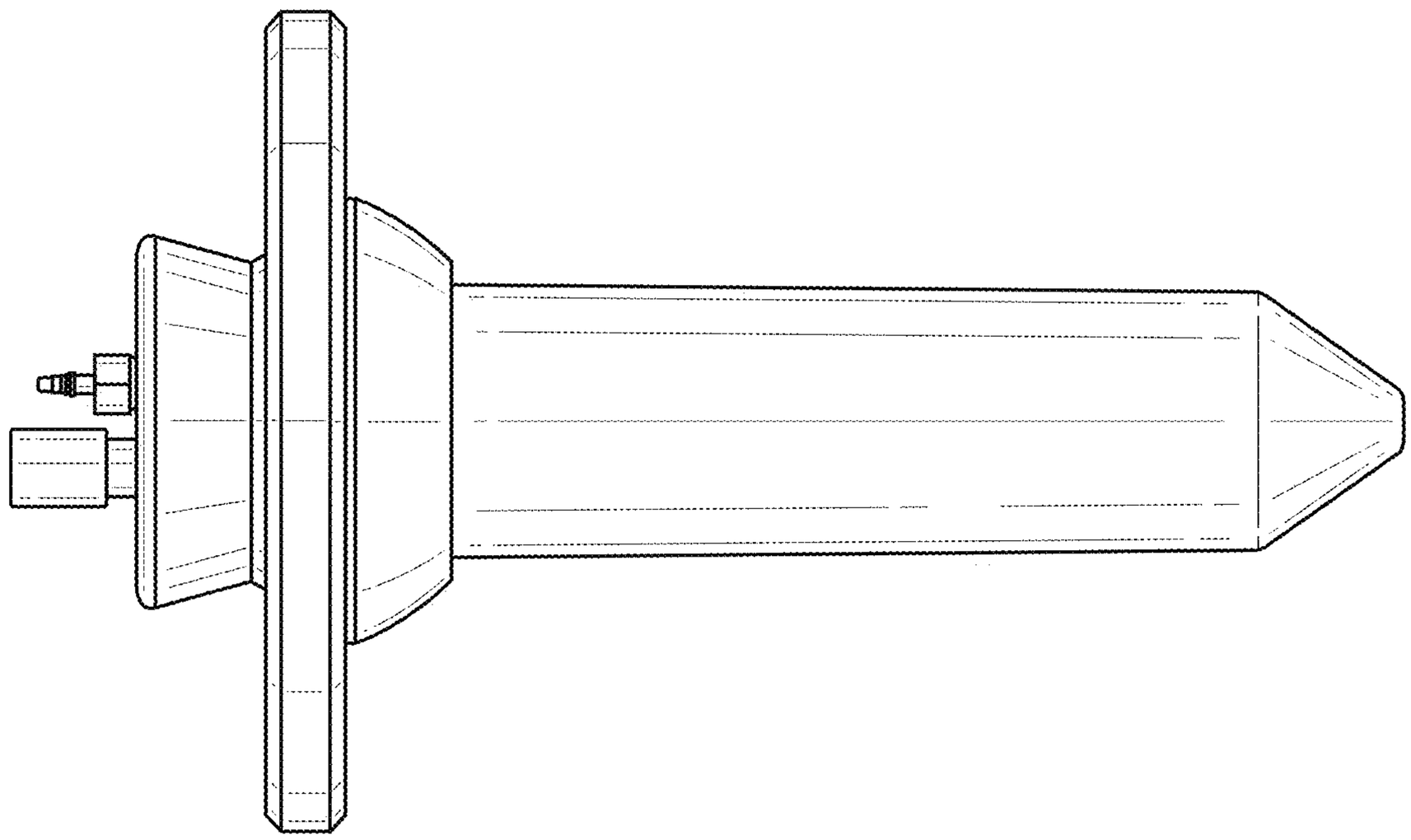

FIG. 4

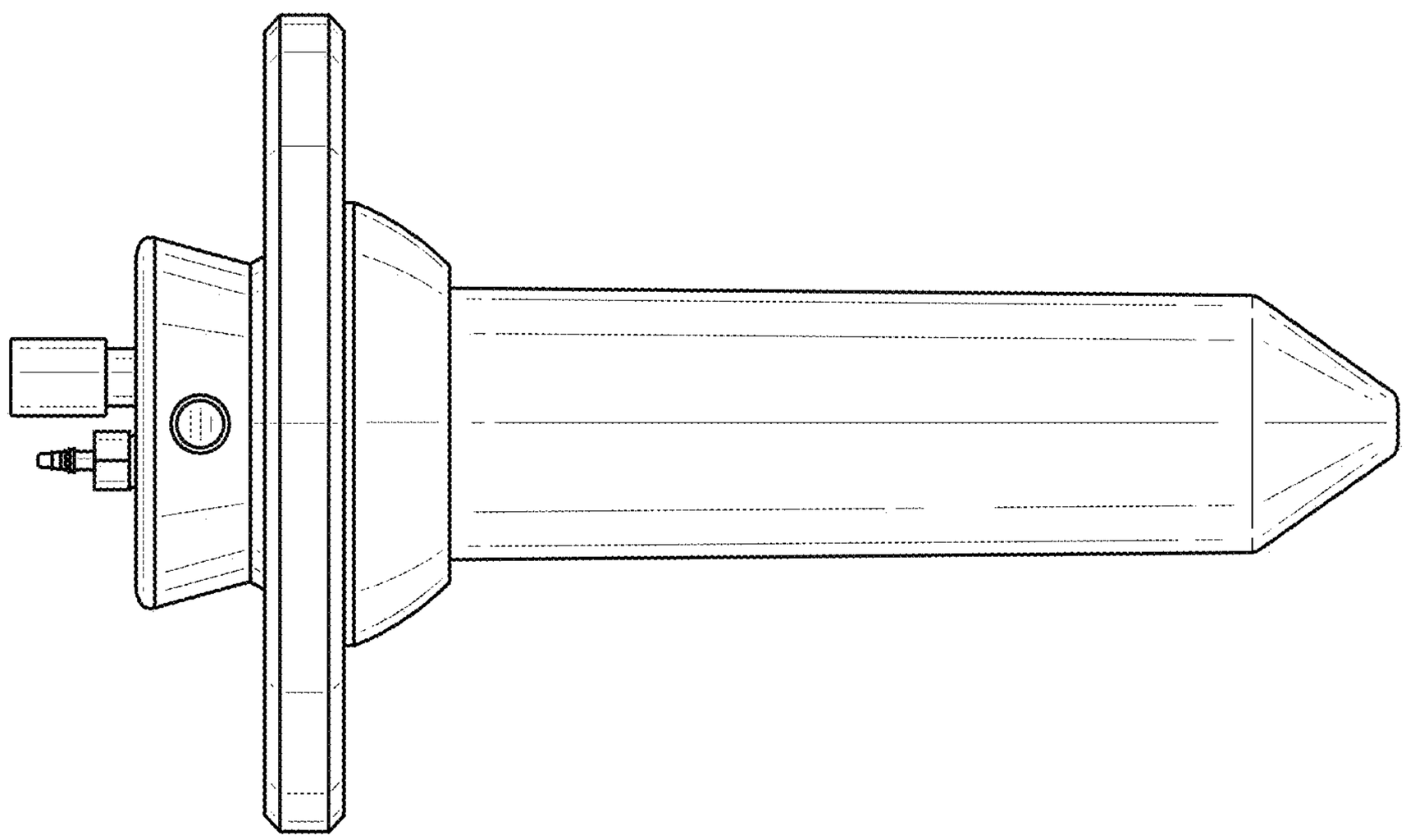

FIG. 3

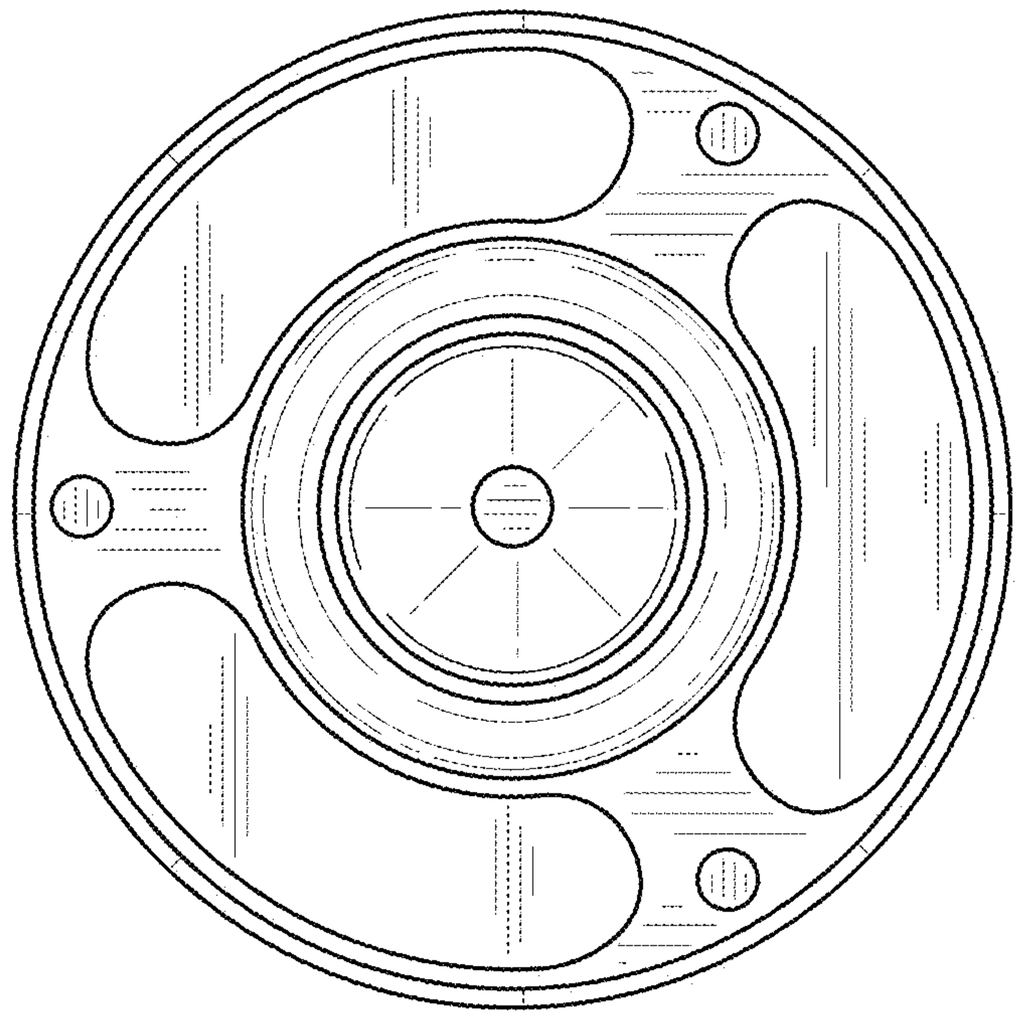

FIG. 6

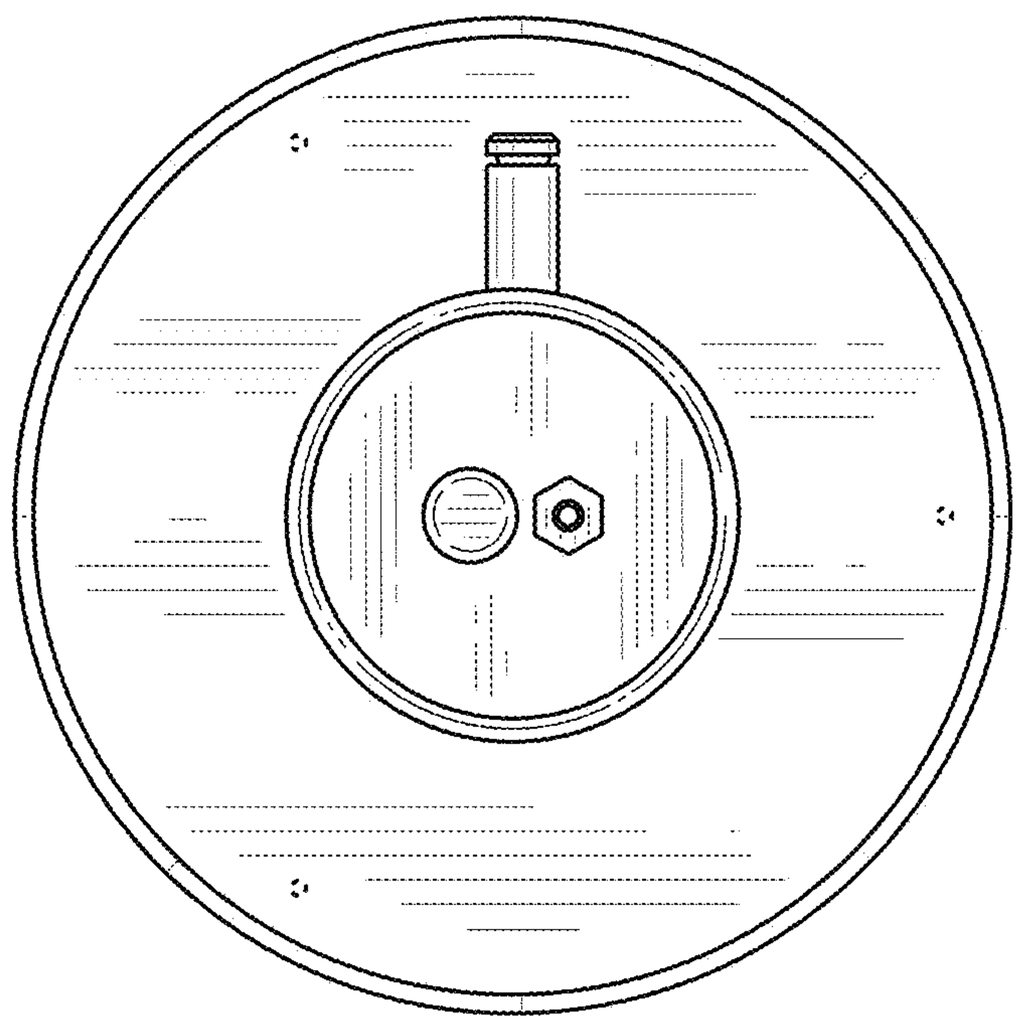

FIG. 5

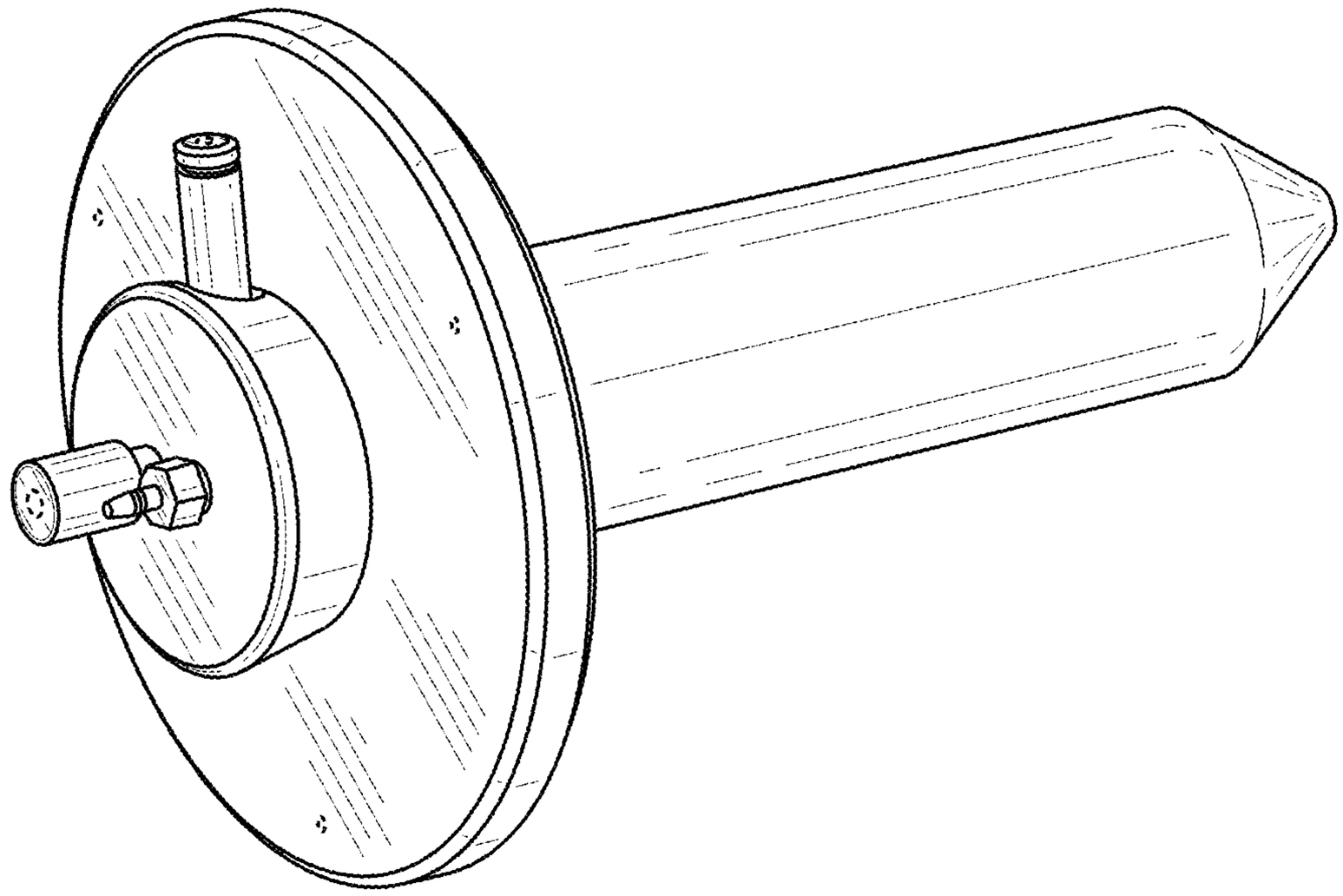

FIG. 8

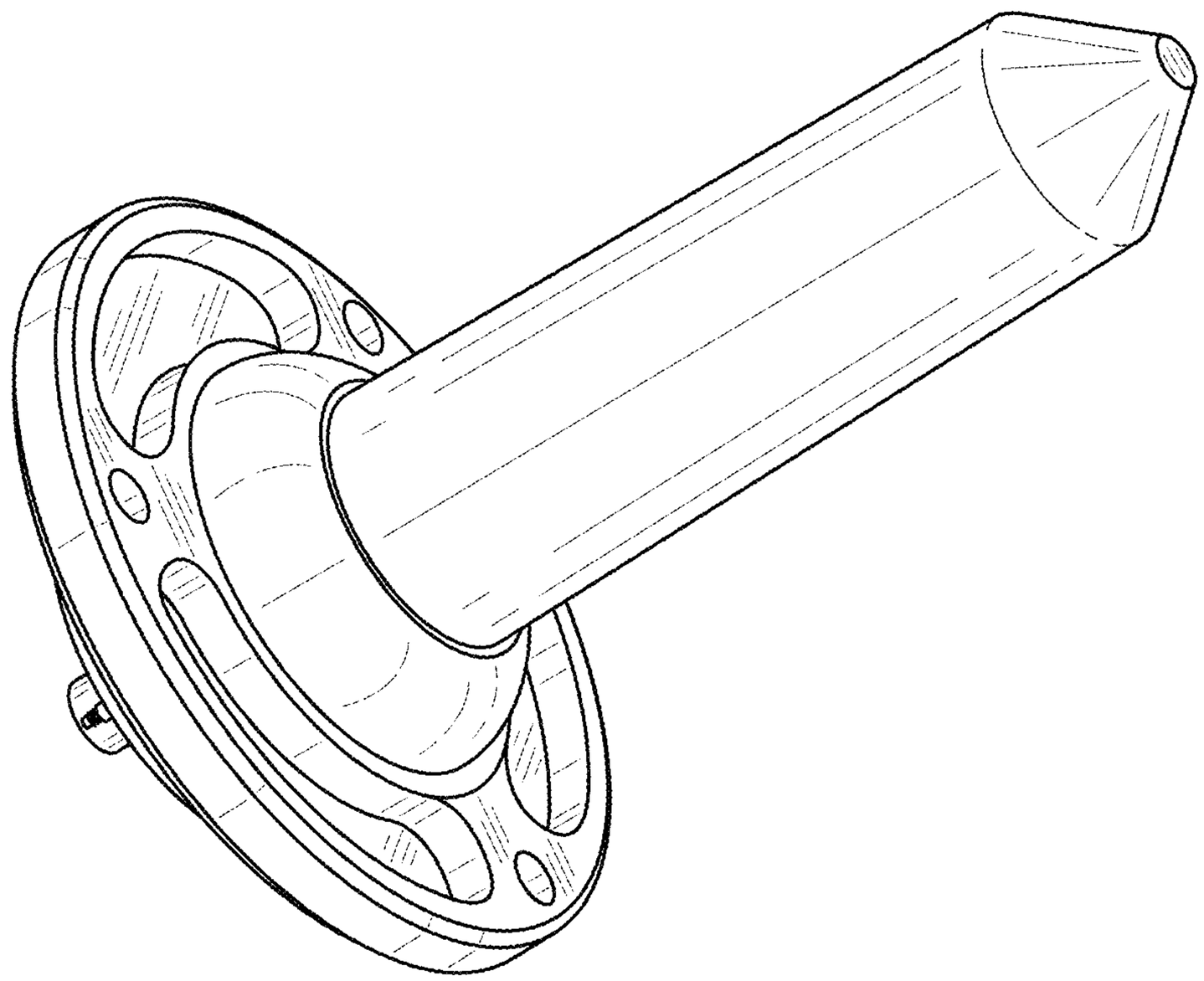

FIG. 7