US00D881904S

(12) United States Design Patent

Angeles et al.

(10) Patent No.: US D881,904 S
(45) Date of Patent: ** Apr. 21, 2020

(54) **DISPLAY SCREEN WITH ANIMATED GRAPHICAL USER INTERFACE**

(71) Applicant: **AERIN MEDICAL, INC.**, Sunnyvale, CA (US)

(72) Inventors: **Michael Angeles**, Alberta (CA); **Andrew Frazier**, Sunnyvale, CA (US); **Fred Dinger**, Austin, TX (US)

(73) Assignee: **AERIN MEDICAL INC.**, Sunnyvale, CA (US)

(**) Term: **15 Years**

(21) Appl. No.: **29/668,605**

(22) Filed: **Oct. 31, 2018**

(51) **LOC (12) Cl.** **14-04**

(52) **U.S. Cl.**
USPC **D14/485**

(58) **Field of Classification Search**
USPC D14/485–495
CPC G06F 3/048
See application file for complete search history.

(56) **References Cited**

U.S. PATENT DOCUMENTS

4,887,605	A	12/1989	Angelsen et al.
5,348,008	A	9/1994	Bomn et al.
5,533,499	A	7/1996	Johnson
5,542,916	A	8/1996	Hirsch et al.
5,624,439	A	4/1997	Edwards et al.
5,674,191	A	10/1997	Edwards et al.
5,707,349	A	1/1998	Edwards
5,718,702	A	2/1998	Edwards
5,728,094	A	3/1998	Edwards
5,730,719	A	3/1998	Edwards
5,733,280	A	3/1998	Avitall
5,738,114	A	4/1998	Edwards
5,743,870	A	4/1998	Edwards

(Continued)

FOREIGN PATENT DOCUMENTS

CN	101325919	12/2008
WO	199907299	2/1999

(Continued)

OTHER PUBLICATIONS

Dorville, Fabien. "Progress Bar." Behance, published May 3, 2013 (Retrieved from the Internet Jan. 30, 2020). Internet URL: <https://www.behance.net/gallery/8490779/Progress-bar> (Year: 2013).*

(Continued)

Primary Examiner — Jack Reickel
Assistant Examiner — Rachel A Voorhies
(74) *Attorney, Agent, or Firm* — Merchant & Gould P.C.

(57) **CLAIM**

The ornamental design for a display screen with animated graphical user interface, as shown and described.

DESCRIPTION

FIG. **1** is the first image in a sequence for a display screen with animated graphical user interface;
FIG. **2** is the second image thereof;
FIG. **3** is the third image thereof;
FIG. **4** is the fourth image thereof; and,
FIG. **5** is the fifth image thereof.
The outermost broken lines show the display screen and form no part of the claimed design. The remaining broken lines illustrate portions of the animated graphical user interface that form no part of the claimed design. The appearance of the animated graphical user interface sequentially transitions between the images shown in FIGS. **1-5**. The process or period in which one image transitions to another image forms no part of the claimed design.

1 Claim, 5 Drawing Sheets

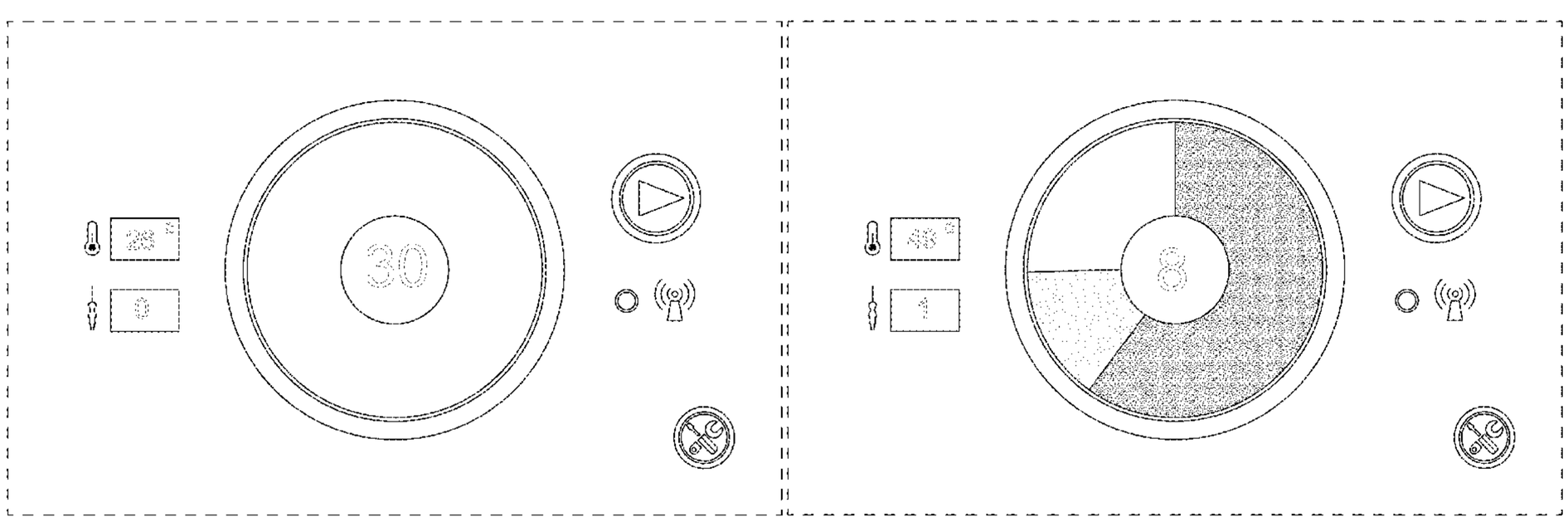

(56) **References Cited**

U.S. PATENT DOCUMENTS

5,743,904 A 4/1998 Edwards
5,746,224 A 5/1998 Edwards
5,800,429 A 9/1998 Edwards
5,807,306 A 9/1998 Shapland et al.
5,816,095 A 10/1998 Nordell, II et al.
5,817,049 A 10/1998 Edwards
5,820,580 A 10/1998 Edwards et al.
5,823,197 A 10/1998 Edwards
5,827,277 A 10/1998 Edwards
5,843,021 A 12/1998 Edwards et al.
5,843,077 A 12/1998 Edwards
5,846,235 A 12/1998 Pasricha et al.
5,879,349 A 3/1999 Edwards
5,938,659 A 8/1999 Tu
6,045,549 A 4/2000 Smethers et al.
6,096,033 A 8/2000 Tu et al.
6,102,907 A 8/2000 Smethers et al.
6,109,268 A 8/2000 Thapliyal et al.
6,126,657 A 10/2000 Edwards et al.
6,131,579 A 10/2000 Thorson et al.
6,139,546 A 10/2000 Koenig et al.
6,152,143 A 11/2000 Edwards
6,165,173 A 12/2000 Kamdar et al.
6,179,803 B1 1/2001 Edwards et al.
6,210,355 B1 4/2001 Edwards et al.
6,228,079 B1 5/2001 Koenig
6,231,569 B1 5/2001 Bek et al.
6,293,941 B1 9/2001 Strul et al.
6,309,386 B1 10/2001 Bek
6,371,926 B1 4/2002 Thorson et al.
6,383,181 B1 5/2002 Johnston et al.
6,391,028 B1 5/2002 Fanton et al.
6,416,491 B1 7/2002 Edwards et al.
6,425,151 B2 7/2002 Barnett
6,431,174 B1 8/2002 Knudson et al.
6,451,013 B1 9/2002 Bays et al.
6,502,574 B2 1/2003 Stevens
6,551,310 B1 4/2003 Ganz et al.
6,562,036 B1 5/2003 Ellman et al.
6,575,969 B1 6/2003 Rittman et al.
6,589,235 B2 7/2003 Wong et al.
6,659,106 B1 12/2003 Hovda et al.
6,911,027 B1 6/2005 Edwards et al.
6,978,781 B1 12/2005 Jordan
7,055,523 B1 6/2006 Brown
7,097,641 B1 8/2006 Arless et al.
7,114,495 B2 10/2006 Lockwood, Jr.
7,322,993 B2 1/2008 Metzger et al.
7,361,168 B2 4/2008 Makower
7,416,550 B2 8/2008 Protsenko et al.
7,442,191 B2 10/2008 Hovda et al.
7,655,243 B2 2/2010 Deem et al.
7,678,069 B1 3/2010 Baker et al.
7,780,730 B2 8/2010 Saidi
7,824,394 B2 11/2010 Manstein
7,850,683 B2 12/2010 Elkins et al.
7,997,278 B2 8/2011 Utley
8,114,062 B2 2/2012 Muni
8,128,617 B2 3/2012 Bencini et al.
8,137,345 B2 3/2012 McNall, III et al.
8,317,781 B2 11/2012 Owens et al.
8,317,782 B1 11/2012 Ellman et al.
D716,325 S * 10/2014 Brudnicki D14/486
8,936,594 B2 1/2015 Wolf et al.
8,986,301 B2 3/2015 Wolf et al.
9,072,597 B2 7/2015 Wolf et al.
9,125,677 B2 9/2015 Sobol
9,179,964 B2 11/2015 Wolf et al.
9,179,967 B2 11/2015 Wolf et al.
9,237,924 B2 1/2016 Wolf et al.
9,452,087 B2 1/2016 Holm et al.
D763,910 S * 8/2016 Drozd D14/485
D765,091 S * 8/2016 Del Lima D14/485
9,415,194 B2 8/2016 Wolf et al.
D765,718 S * 9/2016 Vinna D14/488
9,433,463 B2 9/2016 Wolf et al.
9,452,010 B2 9/2016 Wolf et al.
9,486,278 B2 11/2016 Wolf et al.
9,526,571 B2 12/2016 Wolf et al.
D776,717 S * 1/2017 Asai D14/494
D789,383 S * 6/2017 Bawazeer D14/485
9,687,288 B2 6/2017 Saadat
9,687,296 B2 6/2017 Wolf et al.
D795,898 S * 8/2017 Li D14/486
D797,756 S * 9/2017 Meyer D14/485
9,763,723 B2 9/2017 Saadat
9,763,743 B2 9/2017 Lin
9,788,886 B2 10/2017 Wolf et al.
9,801,752 B2 10/2017 Wolf et al.
9,888,957 B2 2/2018 Wolf et al.
9,913,682 B2 3/2018 Wolf et al.
9,943,361 B2 4/2018 Wolf et al.
10,028,780 B2 7/2018 Wolf et al.
10,028,781 B2 7/2018 Saadat
D840,428 S * 2/2019 Narinedhat G06F 9/451 D14/488
D844,013 S * 3/2019 Peeters D14/485
10,265,115 B2 4/2019 Wolf et al.
10,335,221 B2 7/2019 Wolf et al.
D857,034 S * 8/2019 Hung D14/485
10,376,300 B2 8/2019 Wolf et al.
10,398,489 B2 9/2019 Wolf
10,456,185 B2 10/2019 Wolf et al.
10,456,186 B1 10/2019 Wolf et al.
10,470,814 B2 11/2019 Wolf et al.
10,485,603 B2 11/2019 Wolf et al.
D874,492 S * 2/2020 Henderson D14/486
D875,742 S * 2/2020 Kang D14/485
D877,171 * 3/2020 Poindexter D14/486
2002/0016588 A1 2/2002 Wong et al.
2002/0049464 A1 4/2002 Donofrio et al.
2002/0087155 A1 7/2002 Underwood et al.
2002/0128641 A1 9/2002 Underwood et al.
2003/0144659 A1 7/2003 Edwards
2003/0208194 A1 11/2003 Hovda et al.
2003/0225403 A1 12/2003 Woloszko et al.
2004/0193238 A1 9/2004 Mosher
2004/0220644 A1 11/2004 Shalev et al.
2005/0020901 A1 1/2005 Belson
2005/0119643 A1 6/2005 Sobol et al.
2005/0222565 A1 10/2005 Manstein
2005/0234439 A1 10/2005 Underwood
2005/0240147 A1 10/2005 Makower et al.
2005/0288665 A1 12/2005 Woloszko et al.
2006/0235377 A1 10/2006 Earley
2006/0253117 A1 11/2006 Hovda et al.
2006/0276817 A1 12/2006 Vassallo et al.
2007/0049999 A1 3/2007 Esch
2007/0066944 A1 3/2007 Nyte
2007/0073282 A1 3/2007 McGarrigan et al.
2007/0093710 A1 4/2007 Maschke
2007/0219600 A1 9/2007 Gertner et al.
2008/0027423 A1 1/2008 Choi et al.
2008/0027480 A1 1/2008 Van Der Burg et al.
2008/0082090 A1 4/2008 Manstein
2008/0125626 A1 5/2008 Chang et al.
2008/0154237 A1 6/2008 Chang
2008/0183251 A1 7/2008 Azar
2008/0312644 A1 12/2008 Fourkas et al.
2009/0018485 A1 1/2009 Krespi et al.
2009/0124958 A1 5/2009 Li
2009/0143821 A1 6/2009 Stupak
2009/0192505 A1 7/2009 Askew
2009/0292358 A1 11/2009 Saidi
2010/0144996 A1 6/2010 Kennedy et al.
2010/0152730 A1 6/2010 Makower et al.
2010/0174283 A1 7/2010 McNall
2010/0204560 A1 8/2010 Salahieh
2010/0241112 A1 9/2010 Watson
2010/0260703 A1 10/2010 Yankelson
2011/0009737 A1 1/2011 Manstein
2011/0118726 A1 5/2011 De La Rama
2011/0282268 A1 11/2011 Baker et al.
2012/0039954 A1 2/2012 Cupit et al.

(56) **References Cited**

U.S. PATENT DOCUMENTS

2012/0078377	A1	3/2012	Gonzales et al.	
2012/0298105	A1	11/2012	Osorio	
2012/0316473	A1	12/2012	Bonutti et al.	
2012/0316557	A1	12/2012	Sartor et al.	
2012/0323227	A1	12/2012	Wolf et al.	
2012/0323232	A1	12/2012	Wolf et al.	
2013/0158536	A1	6/2013	Bloom	
2013/0218158	A1	8/2013	Danek et al.	
2014/0088463	A1	3/2014	Wolf et al.	
2014/0114233	A1	4/2014	Deem et al.	
2015/0202003	A1	7/2015	Wolf et al.	
2016/0045277	A1	2/2016	Lin	
2016/0058336	A1*	3/2016	Blahnik	A61B 5/1118 600/595
2016/0121112	A1	5/2016	Azar	
2017/0231651	A1	8/2017	Dinger et al.	
2017/0252089	A1	9/2017	Hester	
2017/0252100	A1	9/2017	Wolf et al.	
2017/0357419	A1*	12/2017	Raymann	G06F 9/451
2017/0360495	A1	12/2017	Wolf et al.	
2018/0000535	A1	1/2018	Wolf et al.	
2018/0177542	A1	6/2018	Wolf et al.	
2018/0177546	A1	6/2018	Dinger et al.	
2018/0185085	A1	7/2018	Wolf et al.	
2018/0228533	A1	8/2018	Wolf et al.	
2018/0263678	A1	9/2018	Saadat	
2018/0317997	A1	11/2018	Dinger et al.	
2018/0344378	A1	12/2018	Wolf et al.	
2019/0076185	A1	3/2019	Dinger et al.	
2019/0151005	A1	5/2019	Wolf et al.	
2019/0175242	A1	6/2019	Wolf et al.	
2019/0201069	A1	7/2019	Wolf et al.	
2019/0231409	A1	8/2019	Wolf et al.	
2019/0282289	A1	9/2019	Wolf et al.	
2019/0336196	A1	11/2019	Wolf et al.	
2019/0343577	A1	11/2019	Wolf et al.	

FOREIGN PATENT DOCUMENTS

WO	2001043653	6/2001
WO	2003024349	3/2003
WO	2007037895	4/2007
WO	2007134005	11/2007
WO	2010077980	7/2010
WO	2012174161	12/2012
WO	2013028998 A2	2/2013
WO	2015047863	4/2015
WO	2015048806	4/2015
WO	2015153696	10/2015

OTHER PUBLICATIONS

Nesmiyanov, Nikita. "12 Open Source/Commercial Control Panels for Virtual Machines (VM's) Management." TecMint, published Jul. 28, 2016 (Retrieved from the Internet Jan. 30, 2020). Internet URL: <https://www.tecmint.com/opensource-commercial-control-panels-manage-virtual-machines/> (Year: 2016).*

"Non-Invasive Nasal Airway Remodeling." Aerin Medical, published Sep. 27, 2017 (Retrieved from the Internet Jan. 30, 2020). Internet URL: <https://web.archive.org/web/20170927181830/https://aerinmedical.com/> (Year: 2017).*

Chen et al., China Journal of Endoscopy, vol. 11, No. 3. pp. 239-243, Mar. 2005, [English Translation of Title] "Radiofrequency treatment of nasal posterior-under nerve ethmoidal nerve and infraturbinal for perennial allergic rhinitis under nasal endoscope," [also translated as] "Preliminary exploration of radiofrequency thermocoagulation of the posterior inferior nasal nerve, anterior ethmoidal nerve, and inferior nasal concha under nasal endoscopy in the treatment of perennial allergic rhinitis." 9 pages.

Fang et al., J First Mil Med Univ, vol. 25 No. 7, pp. 876-877, 2005, [English translation of title] "Nasal endoscopy combined with multiple radiofrequency for perennial allergic rhinitis" [also translated as] "Nasal Endoscopic Surgery Combined with Multisite Radiofrequency Technology for Treating Perennial Allergic Rhinitis," 4 pages.

Kong et al., Journal of Clinical Otorhinolaryngology, 2005. "Clinical observation on radiofrequency ablation treatment in perennial allergic rhinitis," Retrieved from the Internet: <URL:http://en.cnki.com.cn/Article_en/CJFDTOTAL-LCEH200505015.htm>, 1 page.

Liu et al., China Journal of Endoscopy, vol. 14, No. 11, pp. 1127-1130, Nov. 2008, [English Translation of Title] "Impact of treatment of perennial rhinitis by radiofrequency thermocoagulations to vidian and antirior ethomoidal nerves on mucociliary clearance," [also translated as] "Impact of radiofrequency thermocoagulation of bilateral vidian and anterior ethmoidal nerve cluster regions on nasal mucociliary transport function in perennial allergic rhinitis and vasomotor rhinitis." 12 pages.

* cited by examiner

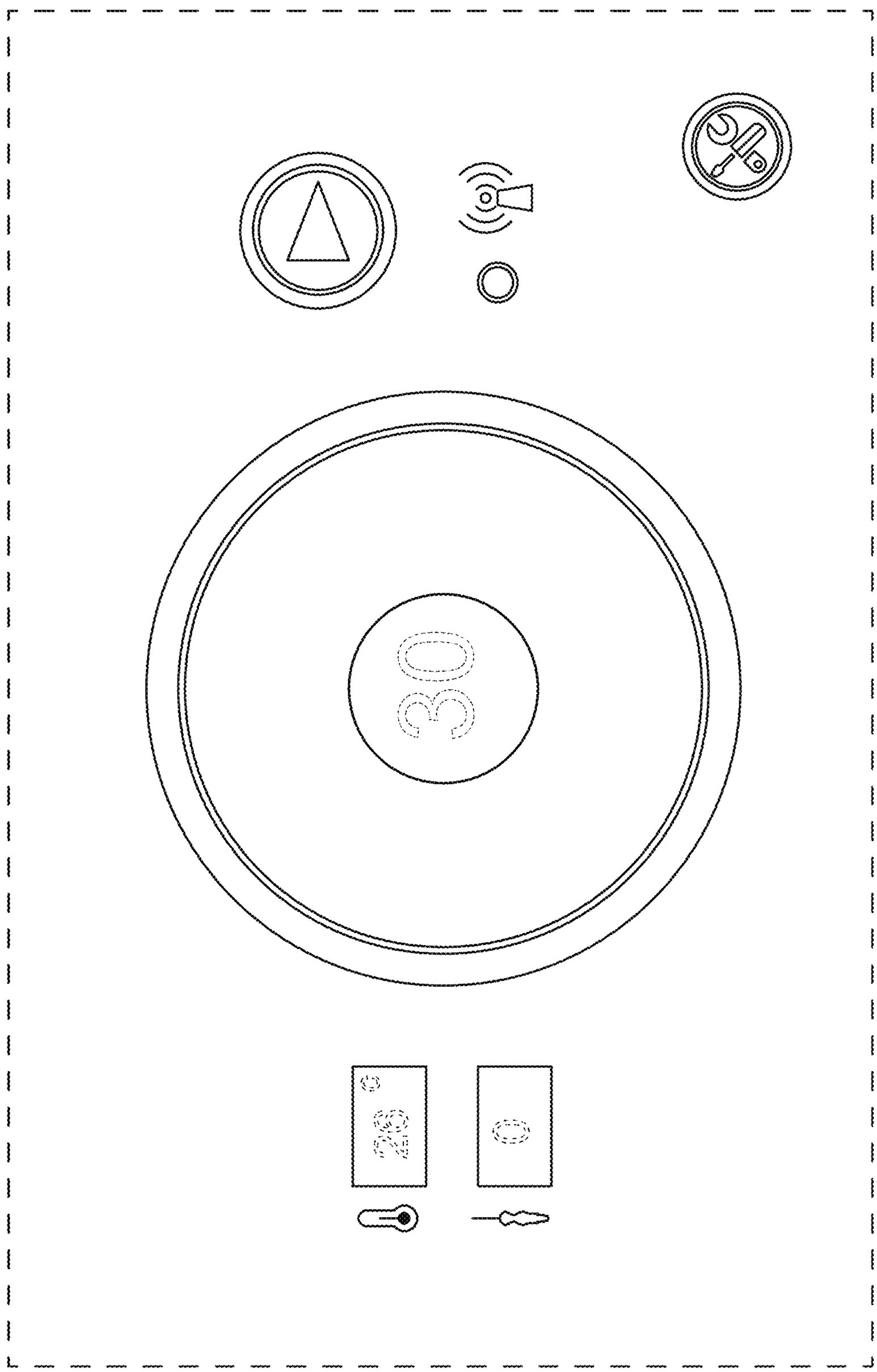

FIG. 1

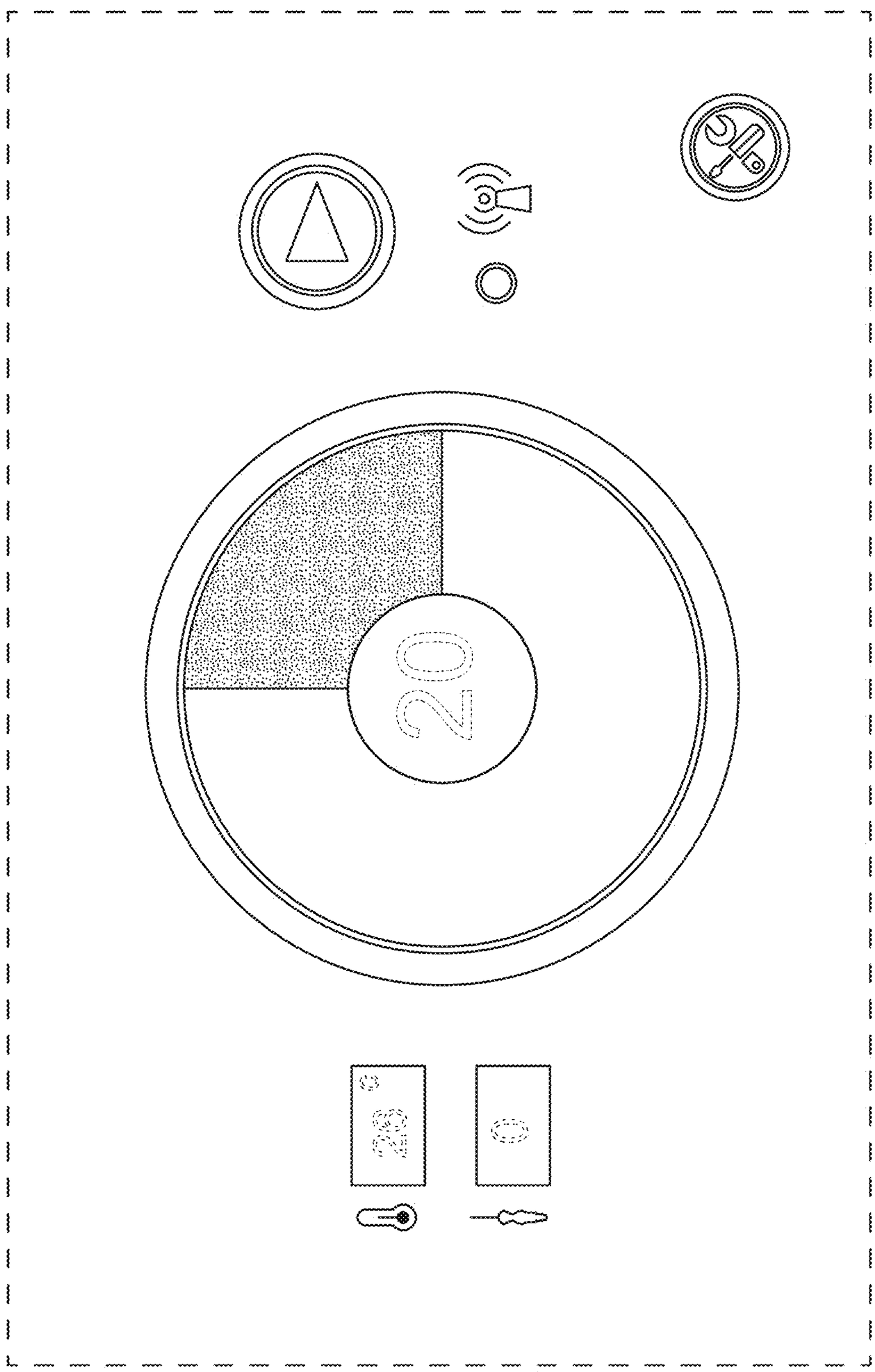

FIG. 2

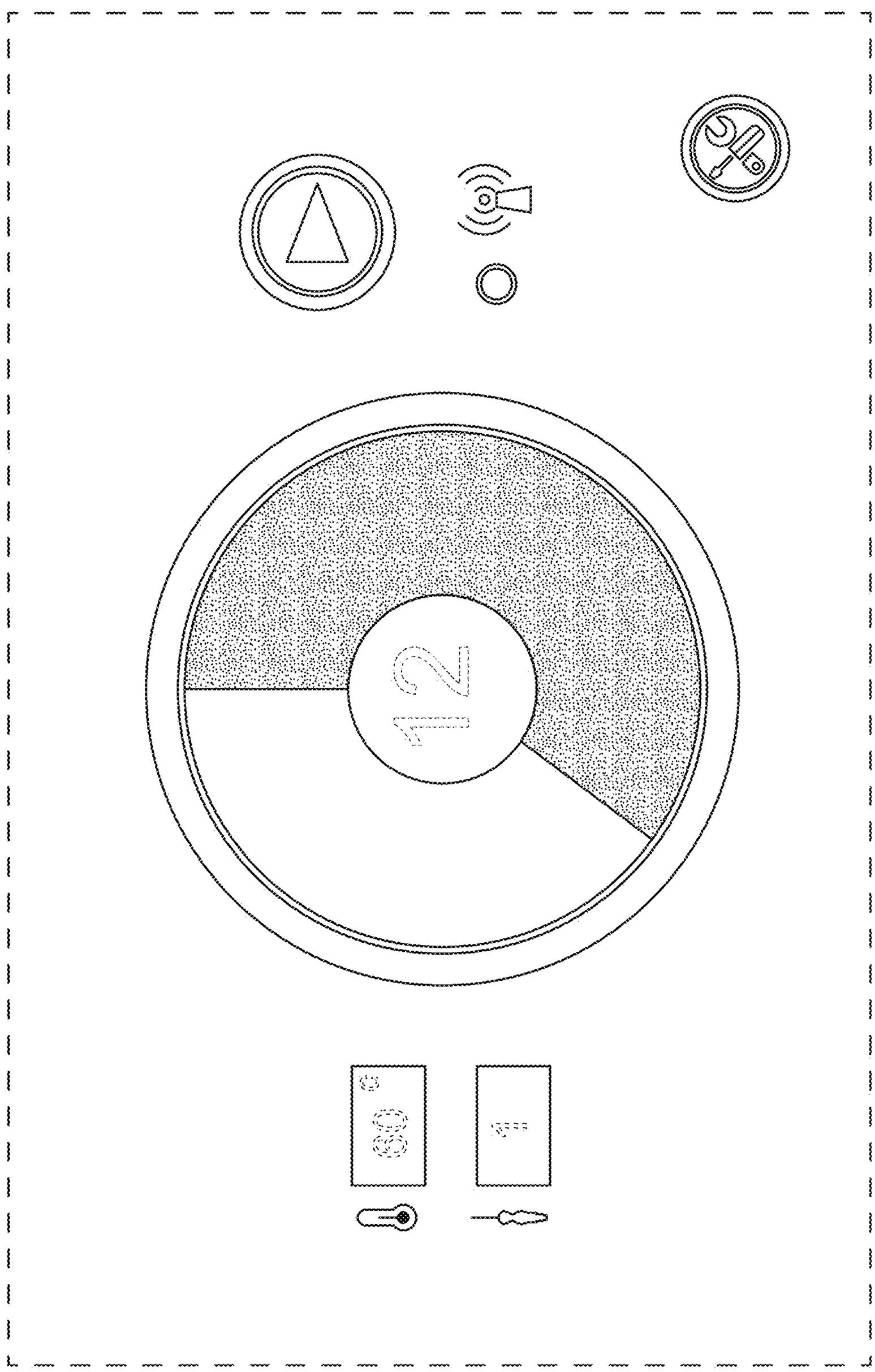

FIG. 3

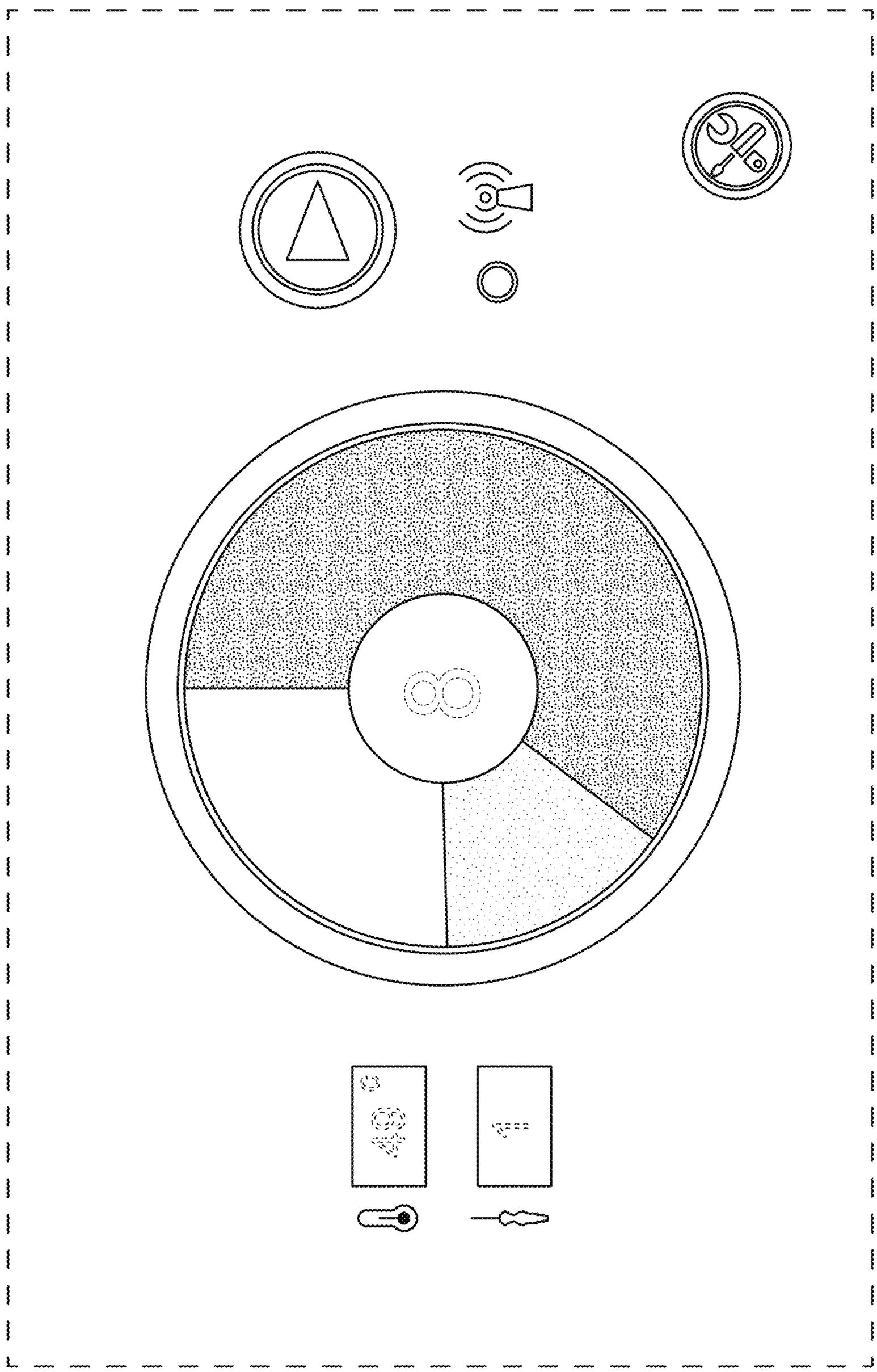

FIG. 4

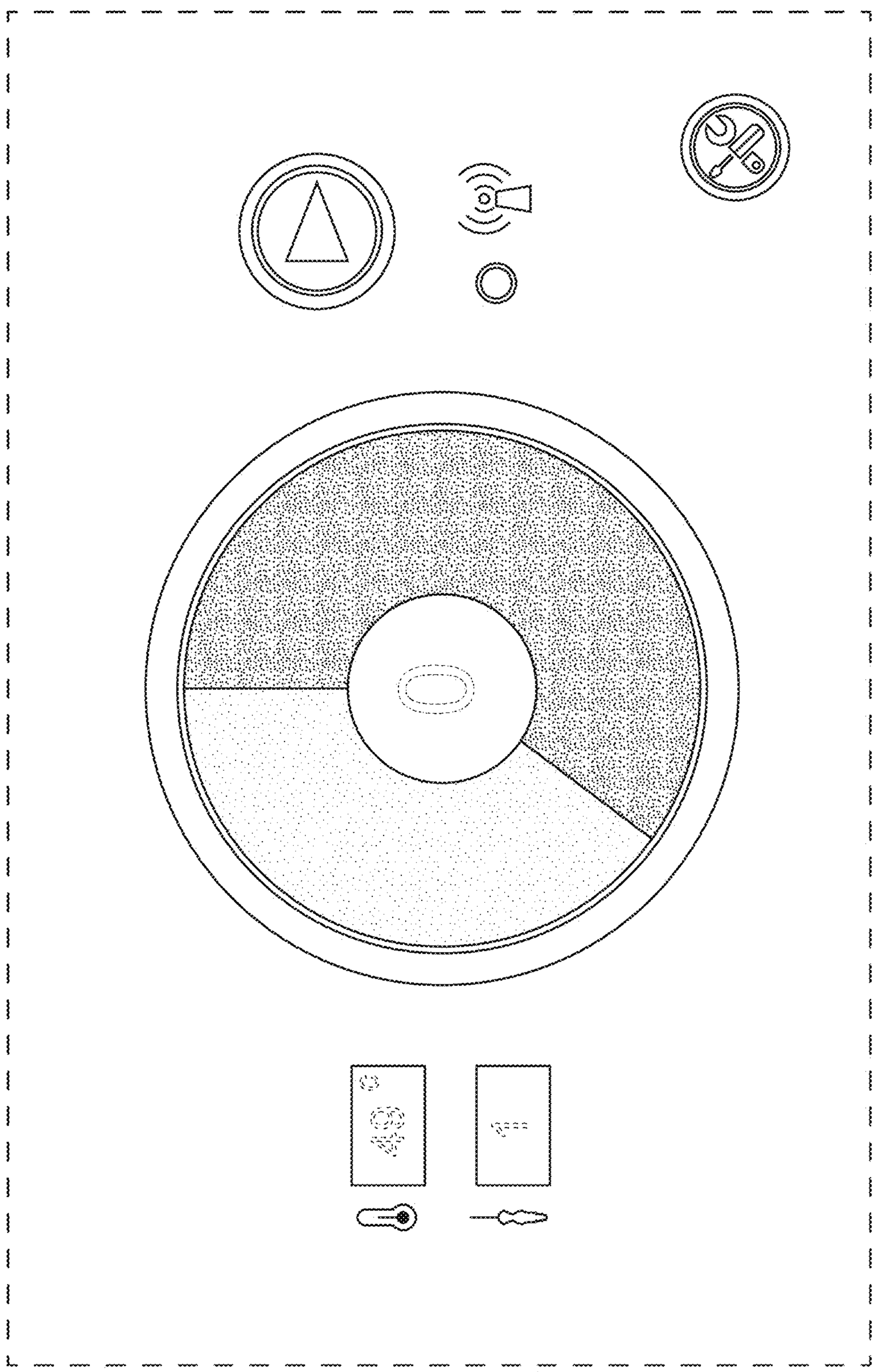

FIG. 5