US00D881004S

(12) United States Design Patent

Giraud et al.

(10) Patent No.: US D881,004 S
(45) Date of Patent: ** Apr. 14, 2020

(54) **CONTAINER ASSEMBLY**

(71) Applicants: **CSP TECHNOLOGIES, INC.**, Auburn, AL (US); **Eli Lilly and Company**, Indianapolis, IN (US)

(72) Inventors: **Jean-Pierre Giraud**, Auburn, AL (US); **Brian Fitzpatrick**, West Chester, PA (US); **Brian Tifft**, Ladson, SC (US); **Andrew Snow**, Indianapolis, IN (US); **Jaime Arnett**, Indianapolis, IN (US)

(73) Assignee: **Eli Lilly and Company**, Indianapolis, IN (US)

(**) Term: **15 Years**

(21) Appl. No.: **29/697,757**

(22) Filed: **Jul. 11, 2019**

Related U.S. Application Data

(62) Division of application No. 29/624,748, filed on Nov. 3, 2017, now Pat. No. Des. 856,798.

(51) **LOC (12) Cl.** **09-01**

(52) **U.S. Cl.**
USPC **D9/435**; D9/454

(58) **Field of Classification Search**
USPC D7/300–322, 391–396.2, 509–511, 523, D7/589, 598, 612, 615, 619.1; D9/435, D9/436, 439, 440, 443, 447, 454, 500, D9/503–505, 516–575, 763–783; 215/40–55, 316–354, 370–385; 220/574–575
CPC B65D 1/00; B65D 1/02; B65D 1/0223; B65D 1/023; B65D 1/0276
See application file for complete search history.

(56) **References Cited**

U.S. PATENT DOCUMENTS

D248,373	S		7/1978	Allen
4,615,463	A		10/1986	Price
D332,739	S		1/1993	Petschek
D371,304	S	*	7/1996	Onneweer D7/511

(Continued)

FOREIGN PATENT DOCUMENTS

EP	2439147	A1	4/2012
WO	2010/066510	A1	6/2010

(Continued)

OTHER PUBLICATIONS

"Activ-vial Portfolio." webpackaging .com. Modified Jan. 16, 2017. Accessed Aug. 31, 2018. Available online at URL: <https:// www.webpackaging.com/en/portals/csptechnologiesinc/assets/11431346/activ-vial-portfolio/> (Year: 2017).

Primary Examiner — Cathron C Brooks
Assistant Examiner — Christian P. McLean
(74) *Attorney, Agent, or Firm* — Mark T. Vogelbacker; Eckert Seamans Cherin & Mellott, LLC

(57) **CLAIM**

The ornamental design for a container assembly, as shown and described.

DESCRIPTION

FIG. **1** is a top perspective view of a container assembly showing our new design;
FIG. **2** is a front elevation thereof;
FIG. **3** is a rear elevation thereof;
FIG. **4** is a first side view thereof;
FIG. **5** is a second side view thereof;
FIG. **6** is a top plan view thereof; and,
FIG. **7** is a bottom plan view thereof.
The broken lines in the drawings illustrate portions of the container assembly that form no part of the claimed design. The dot-dash broken lines illustrate a symbolic break in height and form no part of the claimed design.

1 Claim, 4 Drawing Sheets

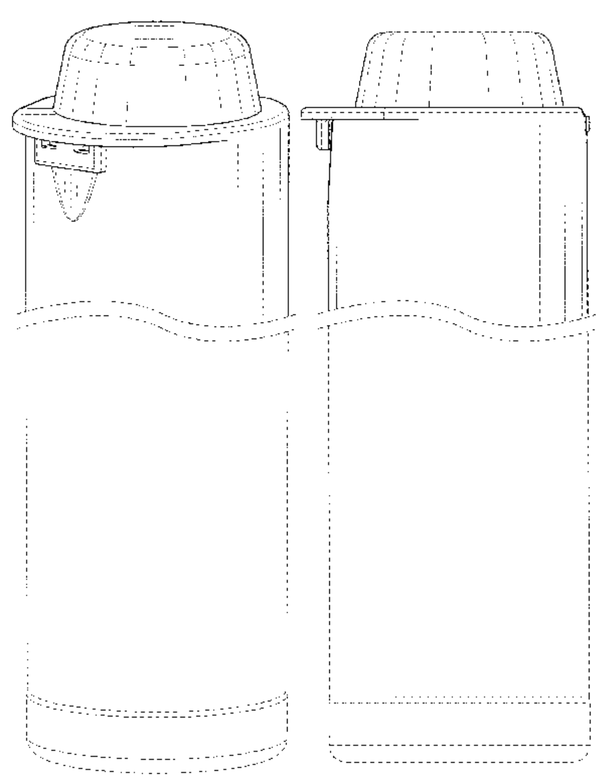

(56) **References Cited**

U.S. PATENT DOCUMENTS

D410,364	S	*	6/1999	Ramirez	D7/507
D418,758	S	*	1/2000	Yucknut	D9/500
6,116,469	A	*	9/2000	Wallays	A47G 19/24 222/148
6,116,477	A	*	9/2000	Kreiseder	B65D 47/0857 222/546
D447,057	S	*	8/2001	Bezek	D9/504
D452,826	S	*	1/2002	Bezek	D9/503
D540,677	S	*	4/2007	Stull	D9/447
D555,490	S		11/2007	Liu	
D564,841	S		3/2008	Clemens	
D585,740	S	*	2/2009	Wilson	D9/449
D606,368	S		12/2009	Wu	
D616,608	S		5/2010	Maddy	
D618,362	S		6/2010	Giraud	
D633,800	S		3/2011	Haywood	
D641,088	S		7/2011	Giraud	
8,051,998	B1		8/2011	Giraud	
D677,396	S		3/2013	Belfance	
D679,583	S		4/2013	Wada	
D688,563	S		8/2013	Cohen	
D694,100	S		11/2013	Schneider	
D722,273	S		2/2015	Ivie	
D728,376	S		5/2015	Floyd	
D750,965	S		3/2016	Alvarez De Cienfuegos Hernandez	
D793,235	S	*	8/2017	Bois	D9/435
D793,818	S		8/2017	Debretton Gordon	
D804,319	S		12/2017	Galekovic	
D809,868	S	*	2/2018	Eyal	D7/523
D816,514	S		5/2018	Wolfson	
D821,137	S	*	6/2018	Boroski	D7/392.1
D821,138	S	*	6/2018	Silsby	D7/396.2
D821,204	S		6/2018	Reggiani	
D822,498	S		7/2018	Sutcliffe	
D827,388	S		9/2018	Kander	
D832,642	S	*	11/2018	Buck	D7/392.1
D835,509	S		12/2018	Cowan	
D837,059	S		1/2019	Wiggins	
D841,398	S		2/2019	Gauss	
D856,798	S	*	8/2019	Giraud	D9/420
D859,143	S	*	9/2019	Perdue	D9/423
D864,672	S	*	10/2019	Callinan	D7/608
D866,261	S	*	11/2019	Jacobsen	D7/511
2006/0219727	A1		10/2006	Giraud	
2009/0095699	A1		4/2009	Milante	
2010/0051636	A1	*	3/2010	Logel	B65D 43/169 220/834
2011/0000930	A1	*	1/2011	Logel	B65D 43/162 220/849
2011/0089187	A1		4/2011	Steiger et al.	
2012/0009356	A1		4/2012	Drew	
2014/0334804	A1		11/2014	Choi	
2014/0352707	A1		12/2014	Liu	
2015/0090711	A1		4/2015	Peterson	
2016/0257450	A1		9/2016	Niggel	
2019/0039804	A1		2/2019	Freedman	

FOREIGN PATENT DOCUMENTS

WO	2014/014160	A1	1/2014
WO	2016/168400	A1	10/2016

* cited by examiner

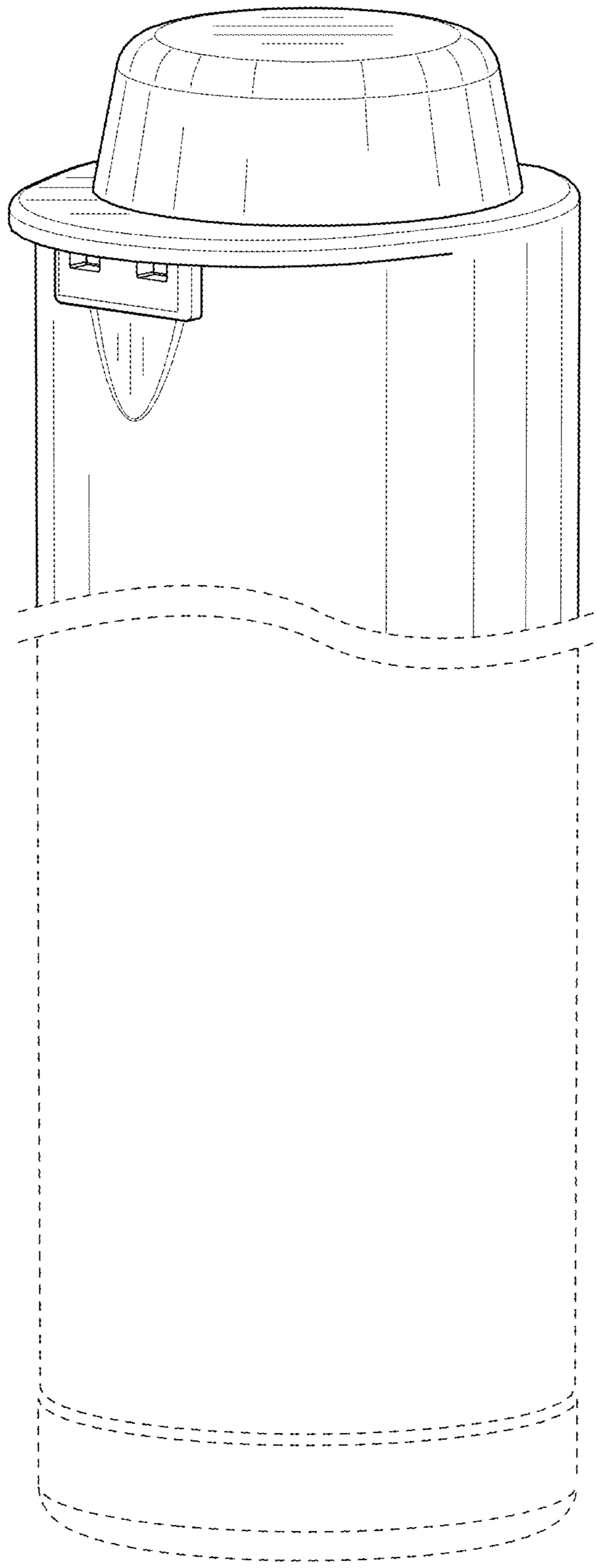

FIG. 1

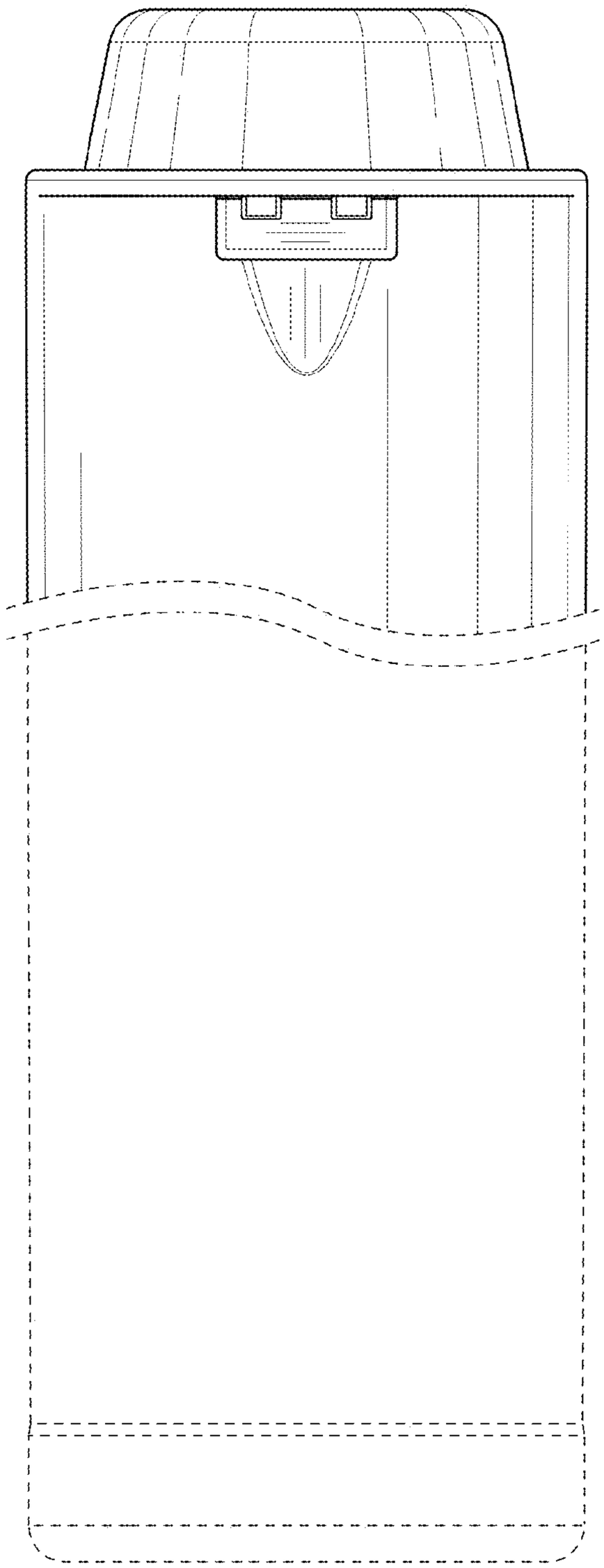

FIG. 2

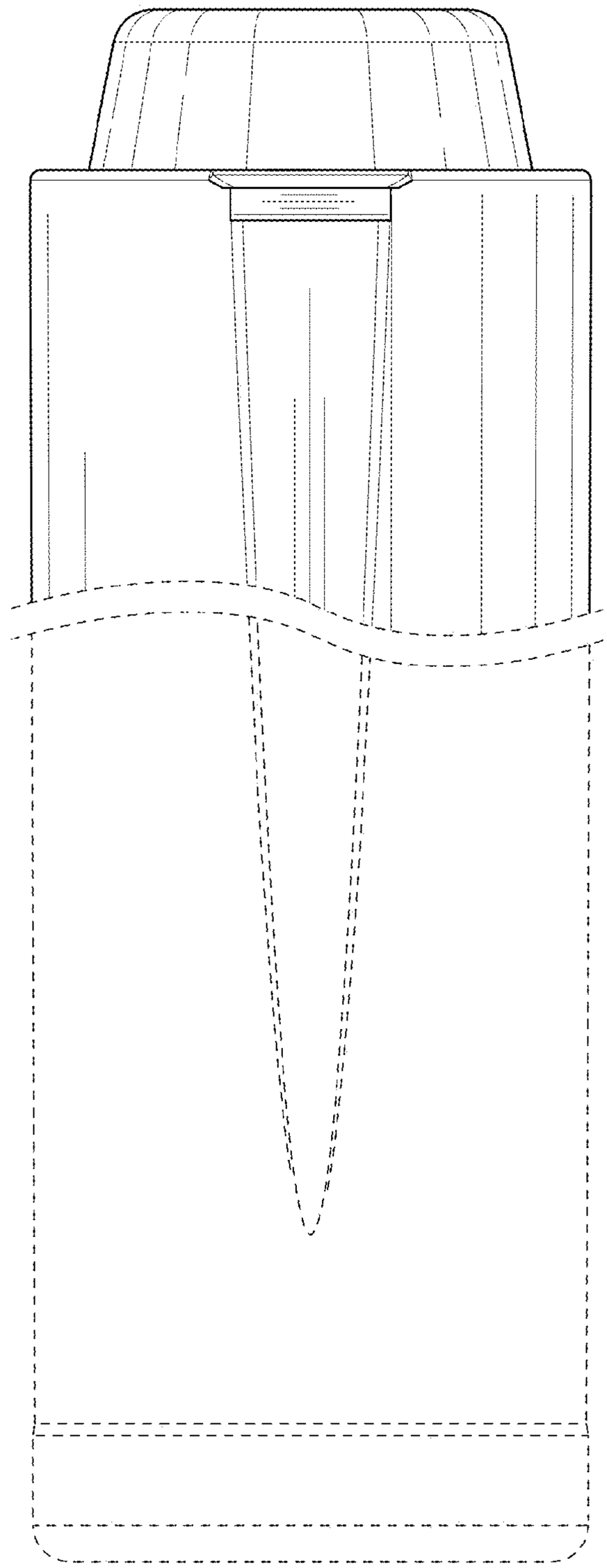

FIG. 3

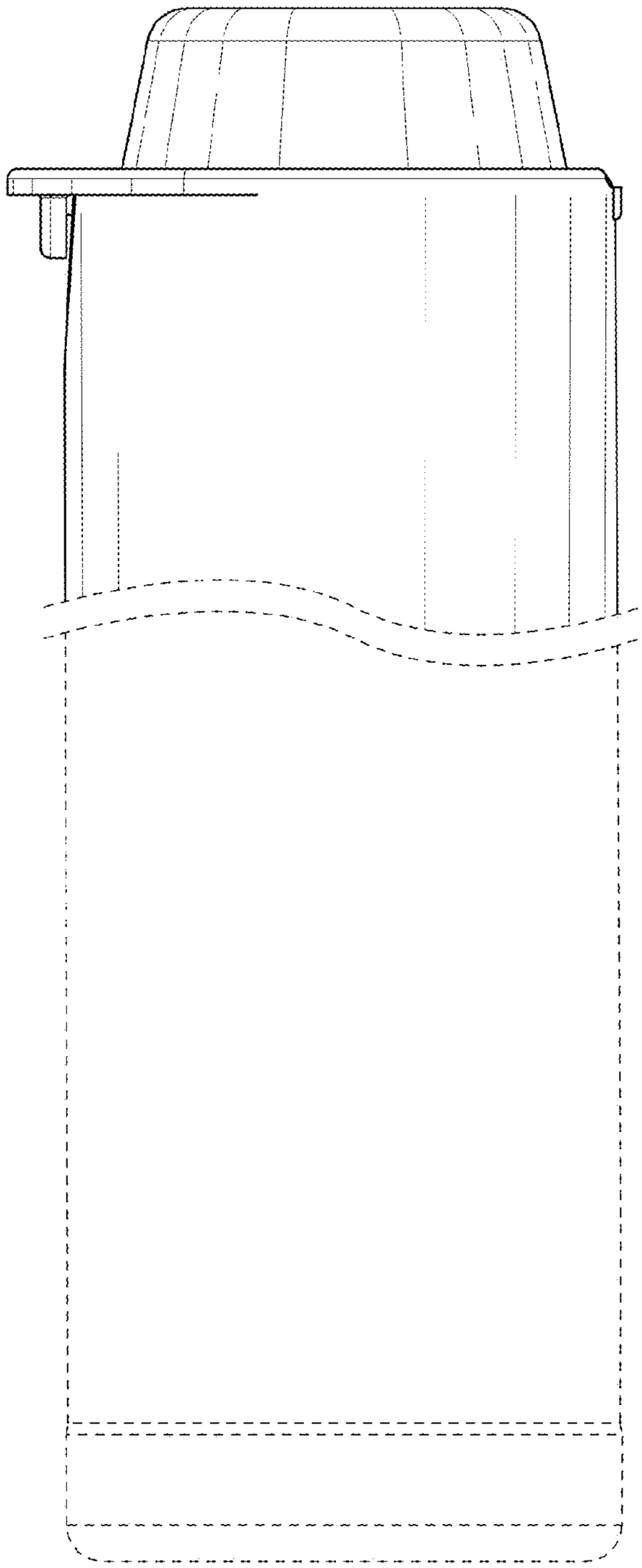

FIG. 4

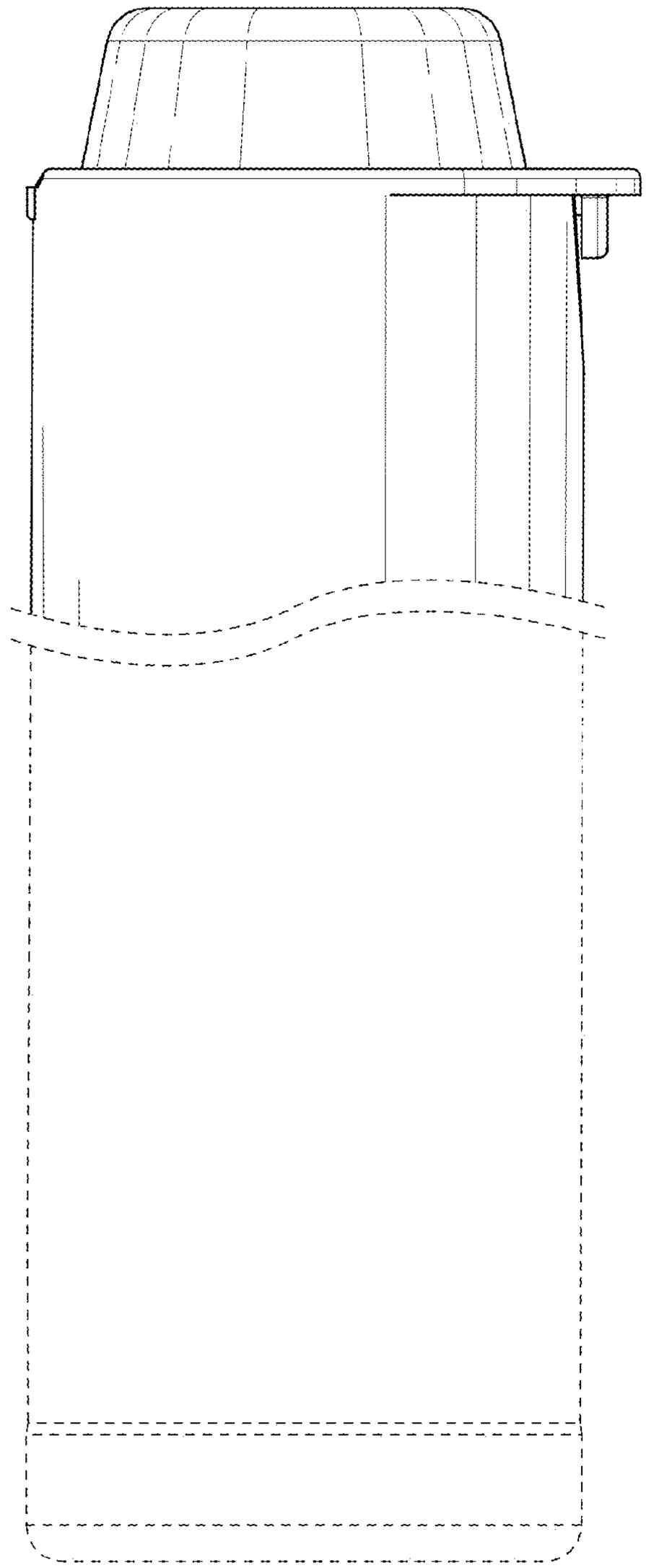

FIG. 5

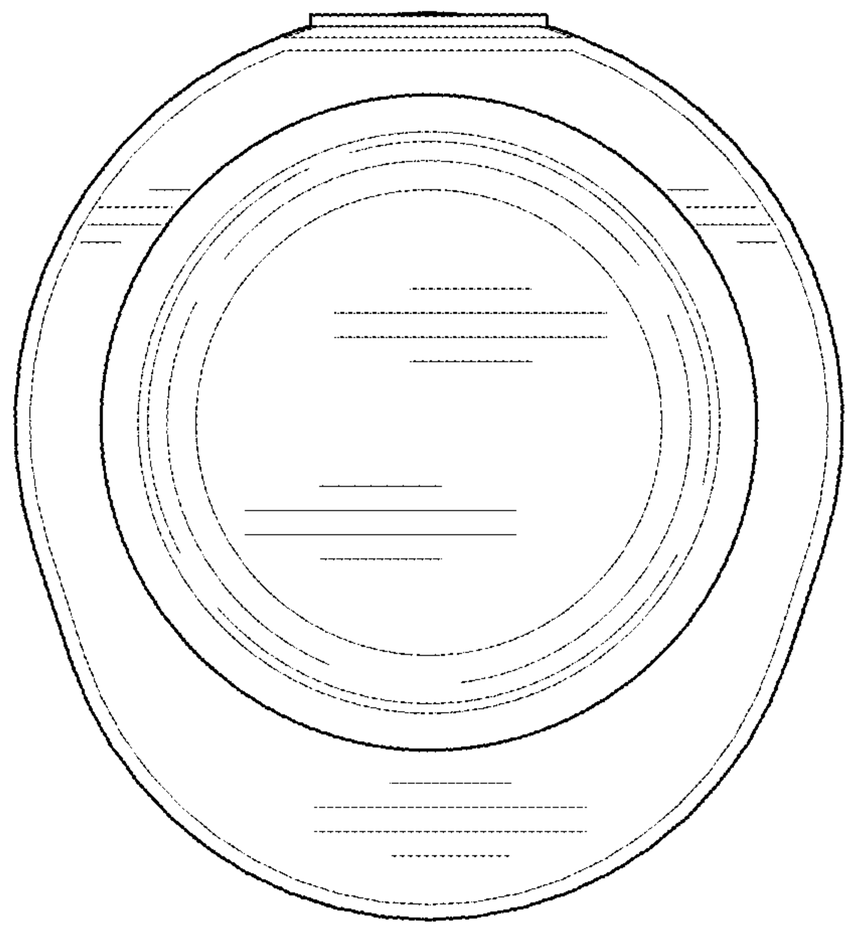

FIG. 6

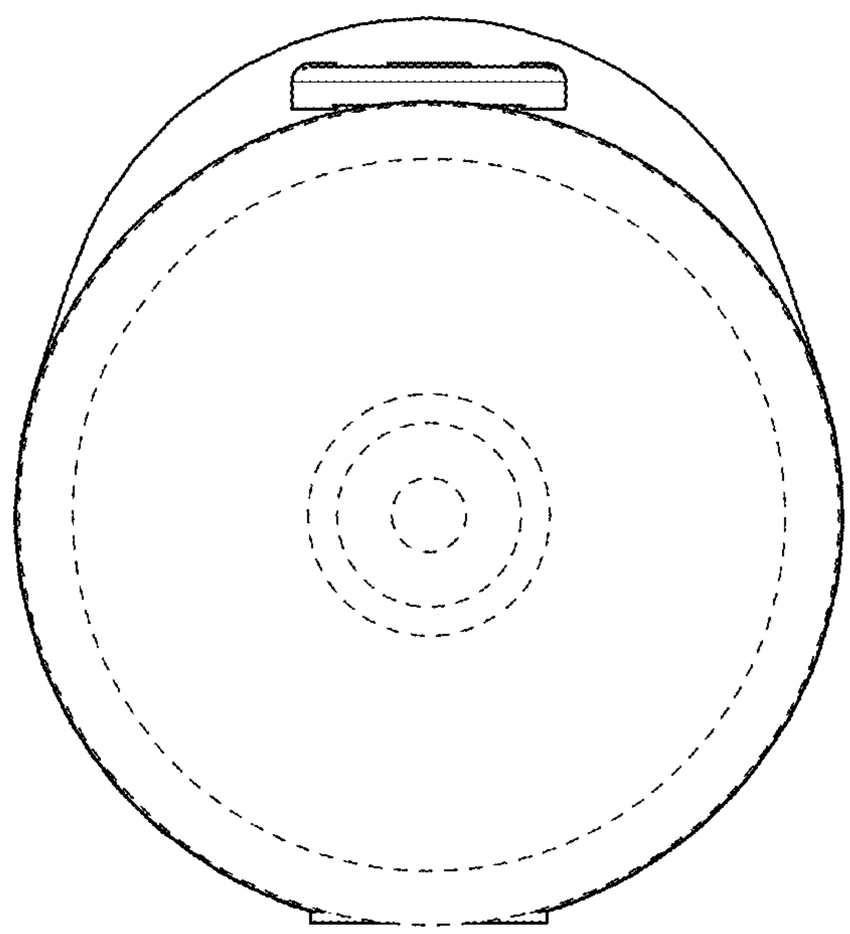

FIG. 7