US00D880461S

(12) United States Design Patent

Ushijima et al.

(10) Patent No.: US D880,461 S
(45) Date of Patent: ** Apr. 7, 2020

(54) **SUBSTRATE FOR ANTENNA DEVICE**

(71) Applicant: **Mitsubishi Electric Corporation**, Tokyo (JP)

(72) Inventors: **Yu Ushijima**, Tokyo (JP); **Ryo Ueda**, Tokyo (JP); **Hidenori Ishibashi**, Tokyo (JP); **Takashi Maruyama**, Tokyo (JP)

(73) Assignee: **Mitsubishi Electric Corporation**, Tokyo (JP)

(**) Term: **15 Years**

(21) Appl. No.: **29/645,344**

(22) Filed: **Apr. 25, 2018**

(30) **Foreign Application Priority Data**

Jan. 19, 2018 (JP) 2018-000860
Jan. 19, 2018 (JP) 2018-000861

(51) **LOC (12) Cl.** **14-03**
(52) **U.S. Cl.**
USPC **D14/230**
(58) **Field of Classification Search**
USPC D14/230
CPC .. H01Q 1/24; H01Q 1/22; H01Q 1/38; H01Q 9/28; H01Q 1/12
See application file for complete search history.

(56) **References Cited**

U.S. PATENT DOCUMENTS

2,027,624 A * 1/1936 Bastow B65D 17/523 40/307
2,253,481 A * 8/1941 Eberts B67B 7/24 30/450
2,480,155 A * 8/1949 Masters H01Q 9/285 343/795
2,631,235 A * 3/1953 Sheriff H01Q 5/48 343/794
D413,329 S * 8/1999 Lin D14/230
D416,022 S * 11/1999 Lin D14/230
D609,700 S * 2/2010 Takahashi D14/230
D612,371 S * 3/2010 Suleiman D14/234
D619,568 S * 7/2010 Kuramoto D14/230
D623,175 S * 9/2010 Suleiman D14/230
D656,131 S * 3/2012 Suleiman D14/230
D665,385 S * 8/2012 Conrad D14/230
D754,641 S * 4/2016 Suleiman D14/230
D802,563 S * 11/2017 Manivannan D14/230
D806,689 S * 1/2018 Deng D14/234
D857,671 S * 8/2019 Montgomery D14/230
(Continued)

OTHER PUBLICATIONS

Planar dipole antenna on a dielectric substrate. publication date Feb. 2014, https://www.researchgate.net/figure/Planar-dipole-antenna-on-a-dielectric-substrate_fig1_ . . . site visited Sep. 21, 2019.*

Primary Examiner — Lilyana Bekic
Assistant Examiner — John R Yeh
(74) *Attorney, Agent, or Firm* — Studebaker & Brackett PC

(57) **CLAIM**

The ornamental design for a substrate for antenna device, as shown and described.

DESCRIPTION

FIG. **1** is a front, bottom, and left side perspective view for a substrate for antenna device showing our new design;
FIG. **2** is a front view thereof;
FIG. **3** is a rear view thereof;
FIG. **4** is a top view thereof, the bottom view being identical thereof; and,
FIG. **5** is a right side view thereof, the left side view being identical thereof.
The dashed lines depict portions of the substrate for antenna device that form no part of the claimed design. The dot-dash lines define the bounds of the claimed design and form no part thereof.

1 Claim, 4 Drawing Sheets

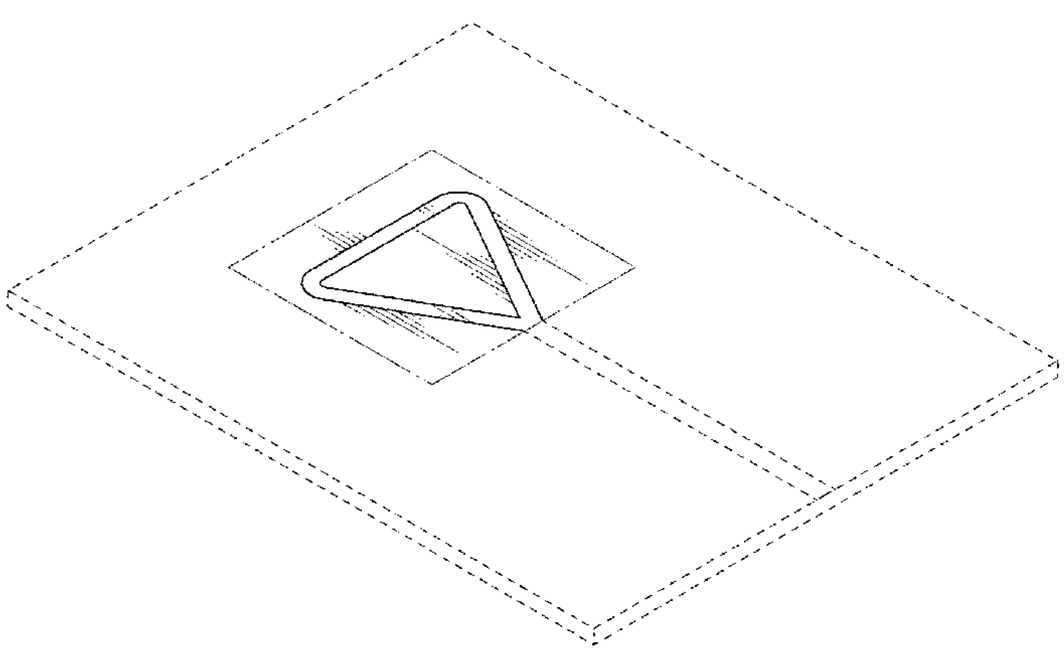

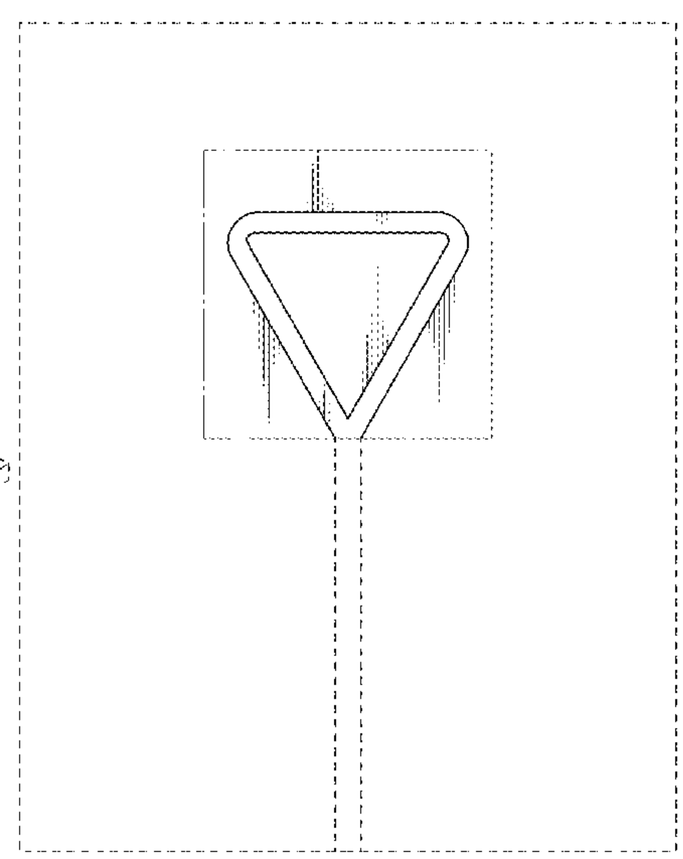

(56) **References Cited**

U.S. PATENT DOCUMENTS

D857,675	S *	8/2019	Wu	D14/230
D865,726	S *	11/2019	Oliver	D14/230
2004/0017325	A1*	1/2004	Satoh	H01Q 1/38 343/795
2007/0164906	A1*	7/2007	Tsai	H01Q 1/24 343/700 MS
2010/0033709	A1*	2/2010	Lampin	H01Q 1/38 356/51
2012/0154234	A1*	6/2012	Geiler	H01Q 9/28 343/787
2012/0293381	A1*	11/2012	Apostolos	H01Q 1/3291 343/713
2013/0194153	A1*	8/2013	Puente Baliarda	H01Q 1/36 343/860
2013/0194154	A1*	8/2013	Puente Baliarda	H01Q 1/36 343/860
2013/0222199	A1*	8/2013	Apostolos	H01Q 9/28 343/795
2013/0285859	A1*	10/2013	Puente Baliarda	H01Q 1/36 343/700 MS
2014/0139389	A1*	5/2014	Odorcic	H01Q 9/28 343/834
2019/0168932	A1*	6/2019	Jevtic	B65D 47/0847

* cited by examiner

Fig. 1

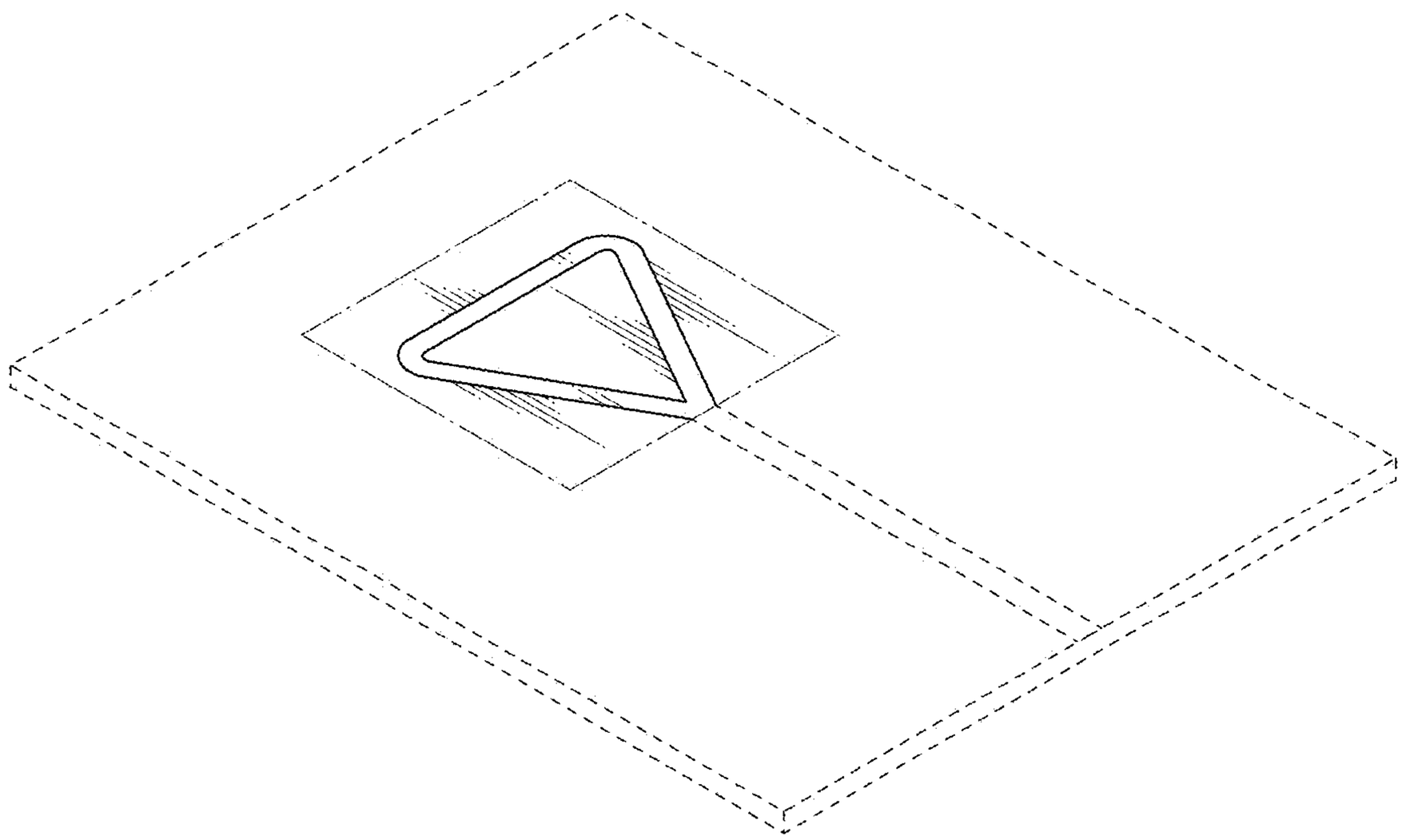

Fig. 2

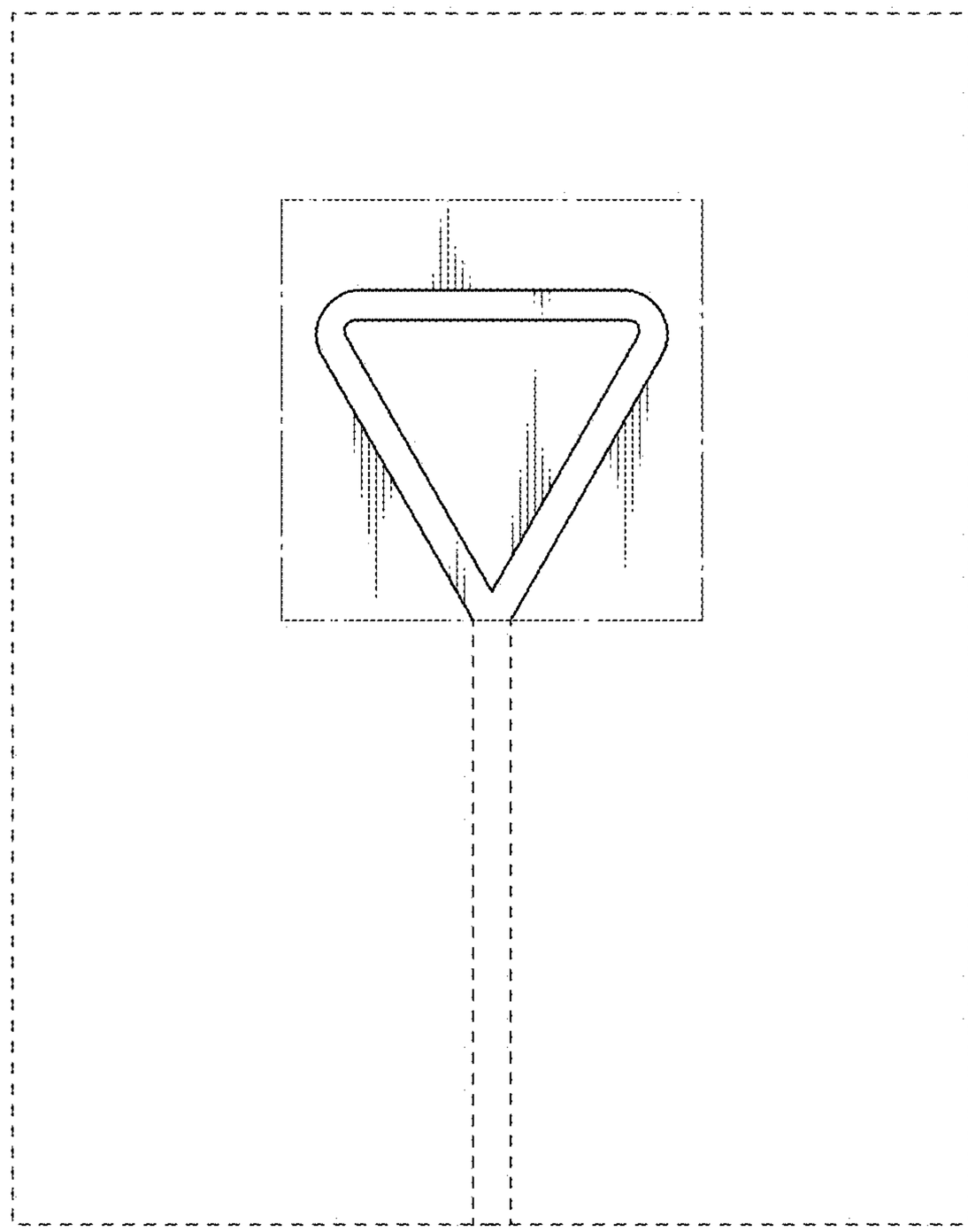

Fig. 3

Fig. 4

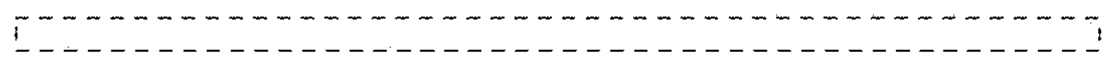
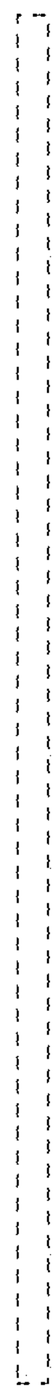
Fig. 5