US00D880369S

(12) United States Design Patent

Weagle

(10) Patent No.: US D880,369 S
(45) Date of Patent: ** Apr. 7, 2020

(54) **CYCLE SUSPENSION ASSEMBLY**

(71) Applicant: **TRVSTPER, INC.**, Salt Lake City, UT (US)

(72) Inventor: **David Weagle**, Edgartown, MA (US)

(73) Assignee: **TRVSTPER, INC.**, Salt Lake City, UT (US)

(**) Term: **15 Years**

(21) Appl. No.: **29/636,503**

(22) Filed: **Feb. 8, 2018**

(51) **LOC (12) Cl.** **12-11**

(52) **U.S. Cl.**
USPC **D12/118**

(58) **Field of Classification Search**
USPC D12/111, 117, 118
CPC B62K 21/02; B62K 21/18; B62K 25/02
See application file for complete search history.

(56) **References Cited**

U.S. PATENT DOCUMENTS

389,200	A	9/1888	Clegg
393,387	A	11/1888	Norton
400,727	A	4/1889	Baudreau
412,322	A	10/1889	Copeland
414,048	A	10/1889	Hunter
423,471	A	3/1890	Easthope
426,402	A	4/1890	Torkelson
435,477	A	9/1890	Blackledge
441,649	A	12/1890	Dunlop
443,266	A	12/1890	Bell
444,639	A	1/1891	O'Neill
447,234	A	2/1891	Donnelly
467,794	A	1/1892	Ellis
468,643	A	2/1892	Clement
524,389	A	8/1894	La Casse
602,354	A	4/1898	Ohlgart
638,723	A	12/1899	Kelly
739,476	A	9/1903	Becker
783,236	A	2/1905	Ashburn
848,324	A	3/1907	Sager

(Continued)

FOREIGN PATENT DOCUMENTS

BE	507753	A	12/1951
CA	474575	A	6/1951

(Continued)

OTHER PUBLICATIONS

Black and white photograph of Greeves trials machine, Applicant Admitted Prior Art, Applicant's internal files.

(Continued)

Primary Examiner — Darlington Ly
(74) *Attorney, Agent, or Firm* — Marshall, Gerstein & Borun LLP

(57) **CLAIM**

The ornamental design for a cycle suspension assembly, as shown and described.

DESCRIPTION

FIG. **1** is a top, front, and right side perspective view of a cycle suspension assembly showing our new design;
FIG. **2** is a top, rear, and right side perspective view thereof;
FIG. **3** is a front elevation view thereof;
FIG. **4** is a rear elevation view thereof;
FIG. **5** is a right side elevation view thereof;
FIG. **6** is a left side elevation view thereof;
FIG. **7** is a top plan view thereof; and,
FIG. **8** is a bottom plan view thereof.
The broken lines in the drawings illustrate portions of the cycle suspension assembly that form no part of the claimed design. The dash-dot broken lines indicate boundaries of the claimed design.

1 Claim, 7 Drawing Sheets

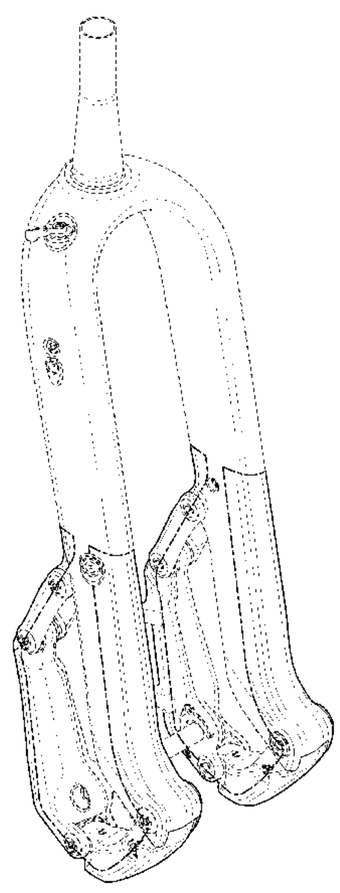

(56) **References Cited**

U.S. PATENT DOCUMENTS

913,961	A	3/1909	Levedahl
927,989	A	7/1909	Meiser
940,245	A	11/1909	Gates
946,143	A	1/1910	Levedahl
953,697	A	4/1910	Kuebodeaux
973,071	A	10/1910	Redmond
979,674	A	12/1910	Kittle et al.
980,999	A	1/1911	Pommer
989,638	A	4/1911	Pilgrim
1,000,115	A	8/1911	Oquist
1,036,263	A	8/1912	Kittle
1,042,480	A	10/1912	Ridgway
1,077,105	A	10/1913	Stewart
1,096,417	A	5/1914	Ekstrom
1,101,614	A	6/1914	Bramham
1,132,829	A	3/1915	Cobb
1,144,753	A	6/1915	Budroe
1,166,156	A	12/1915	Shimmin
1,189,874	A	7/1916	Schickel
1,203,927	A	11/1916	Stagni
1,213,995	A	1/1917	Anderson
1,223,572	A	4/1917	Drew
1,227,634	A	5/1917	Lake
1,251,992	A	1/1918	Drew
1,254,798	A	1/1918	Harley
1,273,179	A	7/1918	Perry et al.
1,298,958	A	4/1919	Johnston
1,333,449	A	3/1920	Russell
1,365,524	A	1/1921	Mellantine
1,397,850	A	11/1921	Yoxall et al.
1,432,376	A	10/1922	Wolff
1,452,436	A	4/1923	Pullin
1,475,044	A	11/1923	Bloom
1,517,146	A	11/1924	Bloom
1,527,133	A	2/1925	Harley
1,605,680	A	11/1926	Merkel
1,834,308	A	12/1931	Harley
1,924,363	A	8/1933	Kanai
2,038,011	A	4/1936	Spiegler et al.
2,073,736	A	3/1937	Duffy
2,087,299	A	7/1937	Pribil
2,160,034	A	5/1939	Schwinn
2,203,342	A	6/1940	Sloman
2,233,313	A	2/1941	Hazelroth
2,271,304	A	1/1942	Mulholland
2,303,568	A	12/1942	McWhorter et al.
2,376,788	A	5/1945	Latscher-Latka
2,462,711	A	2/1949	Barnett
2,463,310	A	3/1949	Probst
2,464,326	A	3/1949	MacGregor
2,475,774	A	7/1949	Benson
2,485,484	A	10/1949	Dean
2,486,430	A	11/1949	Moore
2,489,821	A	11/1949	Ryder
2,504,452	A	4/1950	Rostan
2,525,171	A	10/1950	Franks
2,537,679	A	1/1951	Kraeft
2,540,585	A	2/1951	Kranz
2,543,991	A	3/1951	Schuricht
2,550,876	A	5/1951	Spencer
2,561,156	A	7/1951	Thorkildsen
2,588,889	A	3/1952	Sherwood
2,596,411	A	5/1952	Jordan
2,636,567	A	4/1953	Landrum
2,649,312	A	8/1953	Miller
2,660,455	A	11/1953	Douglas et al.
2,708,112	A	5/1955	Seddon et al.
2,729,465	A	1/1956	Torre
2,751,991	A	6/1956	Mennesson
2,752,167	A	6/1956	Propst et al.
2,756,070	A	7/1956	Torre
2,756,832	A	7/1956	Dalrymple
2,918,306	A	12/1959	Lewandoski
2,953,395	A	9/1960	Turner
2,969,992	A	1/1961	Hahn
2,976,056	A	3/1961	Henry
3,083,038	A	3/1963	Moulton
3,133,748	A	5/1964	Gunnerson
3,433,318	A	3/1969	Packard
3,694,004	A	9/1972	Siebers
3,701,544	A	10/1972	Stankovich
3,730,553	A	5/1973	Harman
3,774,935	A	11/1973	Aldrich
3,942,821	A	3/1976	Bock
3,944,254	A	3/1976	Inui
3,954,284	A	5/1976	Phillips et al.
3,989,261	A	11/1976	Kawaguchi
4,057,264	A	11/1977	Suzuki et al.
4,147,371	A	4/1979	Morita et al.
4,153,237	A	5/1979	Supalla
4,159,123	A	6/1979	Petty
4,162,797	A	7/1979	McBride
4,170,369	A	10/1979	Strutman
4,179,135	A	12/1979	Slater
4,180,280	A	12/1979	Doveri
4,184,695	A	1/1980	Roe et al.
4,186,936	A	2/1980	Offenstadt et al.
4,189,168	A	2/1980	Courtney
4,212,481	A	7/1980	Ribi
4,265,329	A	5/1981	de Cortanze
4,268,055	A	5/1981	Bell
4,295,658	A	10/1981	Kashima
4,367,882	A	1/1983	Alexander et al.
4,388,978	A	6/1983	Fior
4,401,316	A	8/1983	Miyakoshi et al.
4,406,475	A	9/1983	Miyakoshi et al.
4,410,196	A	10/1983	Ribi
4,421,337	A	12/1983	Pratt
4,422,662	A	12/1983	Inoue et al.
4,433,850	A	2/1984	Miyakoshi et al.
4,433,851	A	2/1984	Miyakoshi et al.
4,437,678	A	3/1984	Schultz
4,438,909	A	3/1984	Matsumoto
4,444,406	A	4/1984	Isono
4,455,032	A	6/1984	Kajikawa
4,480,711	A	11/1984	Satoh et al.
4,520,892	A	6/1985	Satoh
4,526,249	A	7/1985	Parker
4,531,755	A	7/1985	Isono et al.
4,533,153	A	8/1985	Tsunoda et al.
4,540,190	A	9/1985	Moulton
4,542,910	A	9/1985	Watanabe
4,561,669	A	12/1985	Simons
4,570,963	A	2/1986	Isono
4,572,534	A	2/1986	Heyl
4,576,393	A	3/1986	Moulton et al.
4,585,245	A	4/1986	Rose
4,616,810	A	10/1986	Richardson et al.
4,625,985	A	12/1986	Nakano et al.
4,650,027	A	3/1987	de Cortanze
4,660,683	A	4/1987	Hayashi et al.
4,685,694	A	8/1987	Kouyama
4,702,338	A	10/1987	Trema
4,703,839	A	11/1987	Yasuo et al.
4,723,621	A	2/1988	Kawano et al.
4,732,241	A	3/1988	Yoshida
4,738,468	A	4/1988	Baron
4,741,545	A	5/1988	Honma et al.
4,742,884	A	5/1988	Ishikawa
4,744,434	A	5/1988	Miyakoshi et al.
4,770,434	A	9/1988	Pietro et al.
4,775,163	A	10/1988	McGowan et al.
4,776,609	A	10/1988	Pan et al.
4,789,174	A	12/1988	Lawwill
4,807,898	A	2/1989	Huntly
4,809,802	A	3/1989	Seino et al.
4,815,763	A	3/1989	Hartmann
4,828,069	A	5/1989	Hatsuyama
4,834,412	A	5/1989	Trema
4,878,558	A	11/1989	Asakura
4,881,750	A	11/1989	Hartmann
4,890,857	A	1/1990	de Cortanze
4,971,344	A	11/1990	Turner
4,993,734	A	2/1991	Trema

(56) **References Cited**

U.S. PATENT DOCUMENTS

4,997,197 A 3/1991 Shultz
5,009,451 A 4/1991 Hayashi et al.
5,042,608 A 8/1991 Horiike et al.
5,050,699 A 9/1991 Savard
5,064,212 A 11/1991 Yun
5,069,303 A 12/1991 Fuller
5,069,467 A 12/1991 Claudio
5,088,705 A 2/1992 Tsai
5,133,223 A 7/1992 Morri
5,156,231 A 10/1992 Trema
5,186,481 A 2/1993 Turner
5,193,832 A 3/1993 Wilson et al.
5,193,833 A 3/1993 Reisinger
5,195,766 A 3/1993 Dohrmann et al.
5,219,211 A 6/1993 Tsuchida et al.
5,248,159 A 9/1993 Moore
5,249,650 A 10/1993 Tanaka
5,269,549 A 12/1993 Wilson et al.
D344,253 S * 2/1994 Bishop D12/118
5,284,352 A 2/1994 Chen
5,299,820 A 4/1994 Lawwill
5,308,099 A 5/1994 Browning
5,310,203 A 5/1994 Chen
5,320,374 A 6/1994 Farris et al.
5,328,196 A 7/1994 Ohma
5,350,185 A 9/1994 Robinson
5,354,085 A 10/1994 Gally
5,359,910 A 11/1994 Chang et al.
5,361,864 A 11/1994 Tanaka
5,380,026 A 1/1995 Robinson
5,403,028 A 4/1995 Trimble
5,405,159 A 4/1995 Klein et al.
5,409,248 A 4/1995 Williams
5,413,368 A 5/1995 Pong et al.
5,417,446 A 5/1995 Pileggi
5,427,208 A 6/1995 Motobu et al.
5,427,397 A 6/1995 Chonan
5,429,380 A 7/1995 Lawwill
5,431,426 A 7/1995 Ijams et al.
5,441,291 A 8/1995 Girvin, III
5,449,155 A 9/1995 Mack
5,456,480 A 10/1995 Turner et al.
5,462,302 A 10/1995 Leitner
D368,054 S * 3/1996 Behrens D12/118
5,498,013 A 3/1996 Hwang
D368,880 S * 4/1996 Harrington D12/111
5,509,674 A 4/1996 Browning
5,509,676 A 4/1996 Fukutake et al.
5,564,534 A 10/1996 Toyoda et al.
5,599,034 A 2/1997 Brigden
5,720,473 A 2/1998 Thomas
5,743,547 A 4/1998 Voss et al.
5,749,590 A 5/1998 Roerig
5,782,313 A 7/1998 Kurawaki et al.
5,799,963 A 9/1998 Berkmann
5,813,684 A 9/1998 Baron
5,829,773 A 11/1998 Rajaee
D403,992 S * 1/1999 D'Aluisio D12/118
5,855,388 A 1/1999 Brewer
D406,802 S * 3/1999 D'Aluisio D12/118
5,899,478 A 5/1999 Woodside
D411,147 S * 6/1999 Tsai D12/118
5,908,200 A 6/1999 Stewart
5,931,487 A 8/1999 Koppelberg et al.
5,931,489 A 8/1999 Damman et al.
5,951,033 A 9/1999 Winter et al.
D415,449 S * 10/1999 Tsai D12/118
D417,416 S * 12/1999 Storz D12/118
6,017,047 A * 1/2000 Hoose B60G 3/01 280/276
6,036,211 A 3/2000 Nohr
6,047,981 A 4/2000 Burrows
6,089,585 A 7/2000 Theobald
6,149,173 A 11/2000 Bynoe
6,152,472 A 11/2000 Woodside
6,155,370 A 12/2000 Iwai et al.
6,164,424 A 12/2000 Girvin et al.
6,164,675 A 12/2000 Pickering
6,199,885 B1 3/2001 Seidl
6,244,609 B1 6/2001 Wilson
6,260,869 B1 7/2001 Hanlon et al.
6,260,870 B1 7/2001 Fan
6,263,994 B1 7/2001 Eitel
6,336,647 B1 * 1/2002 Iwai B62K 25/08 180/219
6,357,775 B1 3/2002 Iwai et al.
6,371,263 B1 4/2002 Hoose
6,382,374 B1 5/2002 Iwai et al.
6,386,567 B1 5/2002 Schonfeld
6,402,175 B1 6/2002 Jansson
6,457,732 B2 10/2002 Ito et al.
6,485,043 B2 11/2002 Ito et al.
6,488,300 B2 12/2002 Ito et al.
6,505,719 B2 * 1/2003 Gonzalez B62K 25/08 188/319.2
6,517,095 B1 2/2003 Lansac et al.
6,517,096 B2 2/2003 Yih
6,533,305 B1 3/2003 Falk
6,669,219 B2 * 12/2003 Turner B62K 21/02 280/276
D494,108 S * 8/2004 Liao D12/118
6,783,140 B1 8/2004 Huang
6,789,810 B2 9/2004 Strong
6,896,276 B1 5/2005 Sparrow
6,908,092 B2 6/2005 Kofuji et al.
6,910,702 B1 6/2005 Hals
6,918,605 B2 7/2005 Wada et al.
6,994,365 B2 2/2006 Kofuji
7,011,325 B2 3/2006 Kinzler et al.
7,140,627 B2 11/2006 Wimmer
7,159,883 B2 1/2007 Mydlarz
D542,718 S * 5/2007 Costa D12/118
7,210,695 B2 5/2007 Griffiths
7,331,594 B2 2/2008 Wimmer
7,350,787 B2 4/2008 Voss
7,364,178 B2 4/2008 Wimmer
7,425,008 B2 9/2008 Pokrywka
7,425,009 B2 9/2008 Namazue et al.
7,434,823 B2 10/2008 Robinson et al.
7,441,622 B2 * 10/2008 Costa B62K 21/04 180/219
7,591,474 B1 * 9/2009 French B62K 21/02 280/279
7,635,141 B2 12/2009 O'Connor
7,699,330 B2 4/2010 Chen
7,708,296 B2 5/2010 Becker et al.
7,744,107 B2 6/2010 Chen
7,887,077 B2 2/2011 Thiers
7,891,645 B2 * 2/2011 Schroeder B62K 25/08 267/178
7,896,379 B2 3/2011 Nagao et al.
D666,947 S * 9/2012 Vardon D12/118
8,448,970 B1 5/2013 Vardon
8,534,692 B2 9/2013 Trebichavsky
8,939,458 B2 1/2015 Nesbitt, III
9,248,883 B2 2/2016 D'Aluisio
D774,986 S * 12/2016 Salvioli Mariani D12/118
9,707,817 B1 7/2017 Arnott et al.
2001/0019197 A1 9/2001 Ito et al.
2002/0084619 A1 7/2002 Odom
2004/0036250 A1 2/2004 Kofuji
2007/0144845 A1 * 6/2007 Saito B62K 25/08 188/281
2008/0258424 A1 10/2008 Paul
2008/0296863 A1 12/2008 Heyl et al.
2008/0303242 A1 12/2008 O'Connor
2009/0033009 A1 2/2009 Kirchner et al.
2010/0244340 A1 9/2010 Wootten et al.
2011/0012321 A1 1/2011 Chen
2012/0248666 A1 10/2012 DeBruler et al.
2014/0061987 A1 3/2014 DeBruler et al.
2014/0202809 A1 7/2014 Ozaki et al.
2017/0087932 A1 3/2017 Winshtein et al.
2017/0198779 A1 7/2017 Batsch et al.

(56) **References Cited**

U.S. PATENT DOCUMENTS

2017/0219041	A1	8/2017	DeBruler et al.
2017/0284493	A1	10/2017	Smith
2019/0031276	A1	1/2019	Weagle
2019/0031277	A1	1/2019	Weagle
2019/0039681	A1	2/2019	Weagle
2019/0047657	A1	2/2019	Weagle
2019/0047658	A1	2/2019	Weagle
2019/0061866	A1	2/2019	Weagle
2019/0061867	A1	2/2019	Weagle
2019/0061868	A1	2/2019	Weagle

FOREIGN PATENT DOCUMENTS

CH	63758	A	2/1914
CN	302966622	S	10/2014
CN	303438302	S	11/2015
CN	303584666	S	2/2016
CN	303604532	S	3/2016
CN	304240449	S	8/2017
CN	304327156	S	10/2017
DE	1084599	B	6/1960
DE	1122392	B	1/1962
DE	3133576	A1	5/1983
DE	3223728	A1	12/1983
DE	8906328	U1	11/1989
DE	3833880	A1	4/1990
DE	4119339	A1	1/1992
DE	9404873	U1	5/1994
DE	9403640	U1	6/1994
DE	9414705	U1	2/1995
DE	19503047	A1	8/1996
DE	19635939	A1	6/1997
DE	19633692	A1	2/1998
DK	49600	C	12/1934
EP	0032170	B1	2/1986
EP	0030306	B1	4/1986
EP	0125244	B1	1/1987
EP	0399615	A2	11/1990
EP	420610	B1	2/1996
EP	726198	A2	8/1996
EP	0731017	B1	10/1997
EP	0941916	A1	9/1999
EP	0992374	A1	4/2000
EP	1049618	B1	9/2003
EP	728093	B2	11/2005
EP	02000388	A2	12/2008
EP	01884455	B1	4/2009
EP	2096024	A1	9/2009
EP	2100807	A1	9/2009
EP	2357098	A2	8/2011
EP	02001733	B1	12/2012
EP	2483141	B1	11/2013
EP	02913257	A1	9/2015
FR	347724	A	3/1905
FR	353990	A	9/1905
FR	350269	A	12/1905
FR	376759	A	8/1907
FR	467213	A	6/1914
FR	547006	A	11/1922
FR	559088	A	9/1923
FR	28240	E	1/1925
FR	636211	A	4/1928
FR	902973	A	9/1945
FR	972653	A	2/1951
FR	1030006	A	6/1953
FR	1032268	A	6/1953
FR	1059922	A	3/1954
FR	1064265	A	5/1954
FR	1067221	A	6/1954
FR	1082316	A	12/1954
FR	2418742	A1	9/1979
FR	2494208	A2	5/1982
FR	2687976	A1	9/1993
FR	2687976	B1	5/1994
FR	3004415	A1	10/2014
GB	166065	A	7/1921
GB	223638	A	10/1924
GB	238069	A	8/1925
GB	239848	A	12/1925
GB	258141	A	9/1926
GB	264003	A	1/1927
GB	279630	A	11/1927
GB	302026	A	12/1928
GB	322370	A	12/1929
GB	469697	A	7/1937
GB	585122	A	1/1947
GB	585904	A	2/1947
GB	586372	A	3/1947
GB	691551	A	5/1953
GB	717259	A	10/1954
GB	720093	A	12/1954
GB	824866	A	12/1959
GB	841523	A	7/1960
GB	1540824	A	2/1979
GB	1545403	A	5/1979
GB	2038736	A	7/1980
GB	2052407	A	1/1981
GB	2073680	A	10/1981
GB	2106843	A	4/1983
JP	63-112191	U	7/1988
JP	649887	U	1/1989
JP	1204884	A	8/1989
JP	5069875	A	3/1993
JP	05-020635	Y2	5/1993
JP	1999091671	A	4/1999
JP	2000159170	A	6/2000
JP	2000159171	A	6/2000
JP	2000159177	A	6/2000
JP	2000159178	A	6/2000
JP	2000168666	A	6/2000
TW	416920	B	1/2001
TW	568054	U	12/2003
TW	596028		6/2004
TW	D111693		7/2006
TW	M335458	U	7/2008
TW	M687899	U	4/2009
TW	D140125		4/2011
TW	D149623		10/2012
WO	WO-82/00445	A1	2/1982
WO	WO-84/00526	A1	2/1984
WO	WO-87/01670	A1	3/1987
WO	WO-95/23728	A1	9/1995
WO	WO-97/46443	A1	12/1997
WO	WO-00/013961	A1	3/2000

OTHER PUBLICATIONS

Black and white photograph of Scorpion motorcycle, Applicant Admitted Prior Art, Applicant's internal files.

Black and white photograph of Silencer motorcycle, Applicant Admitted Prior Art, Applicant's internal files.

Color Photograph of a Cotton TC-70 motorcycle, Applicant Admitted Prior Art, Applicant's internal files.

Color photograph of Armstrong bicycle, Applicant Admitted Prior Art, Applicant's Internal Files.

Color photograph of Armstrong motor cycle, Applicant Admitted Prior Art, Applicant's internal files.

* cited by examiner

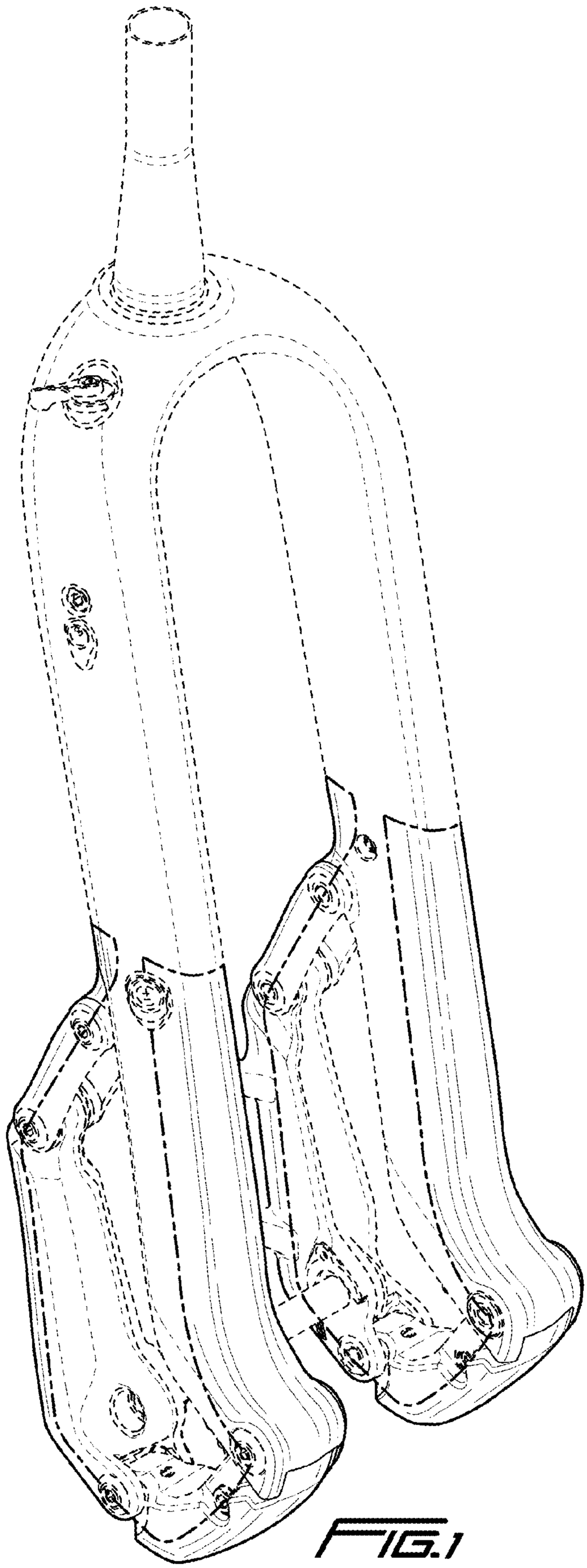

FIG.1

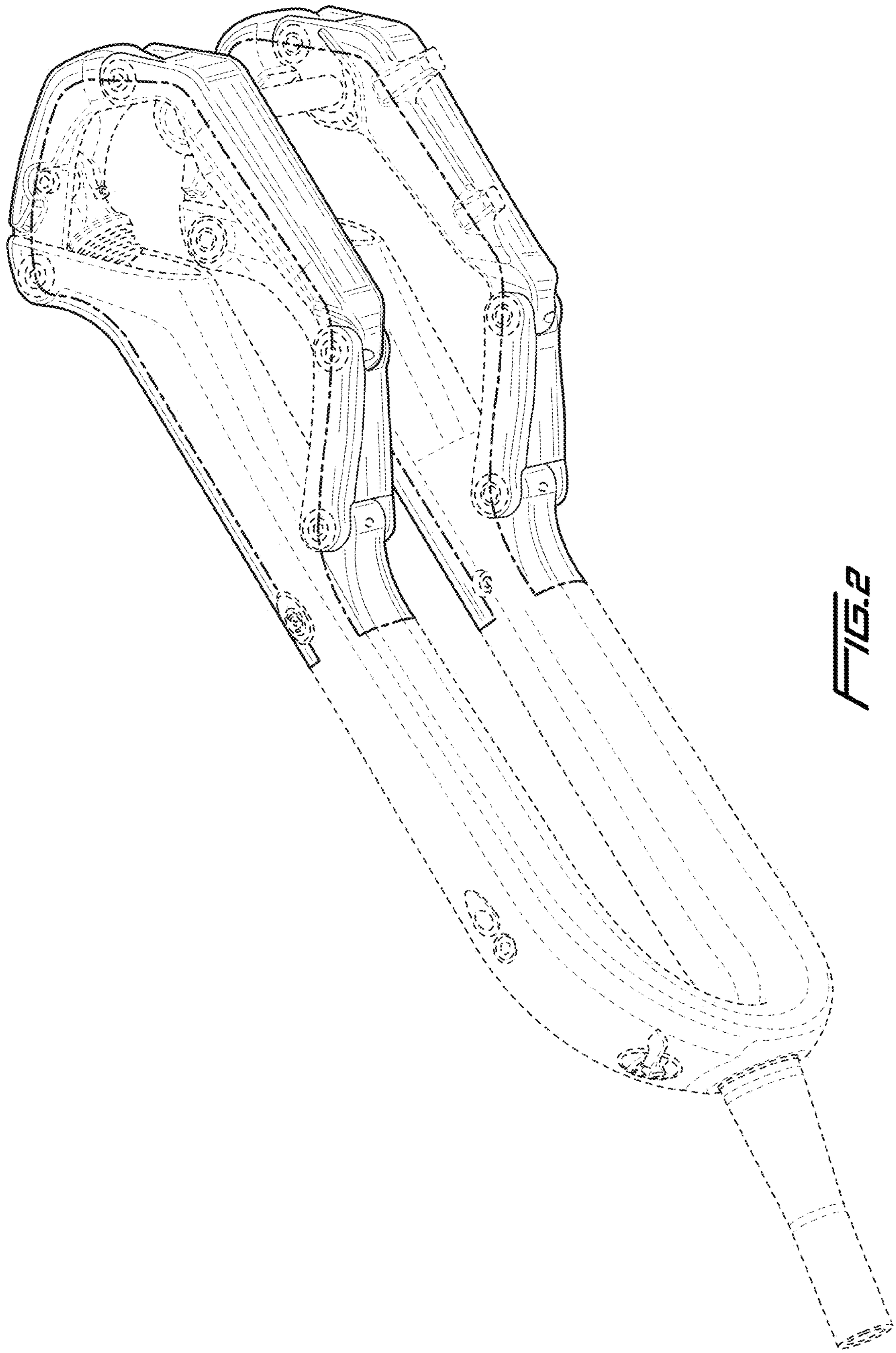

FIG. 2

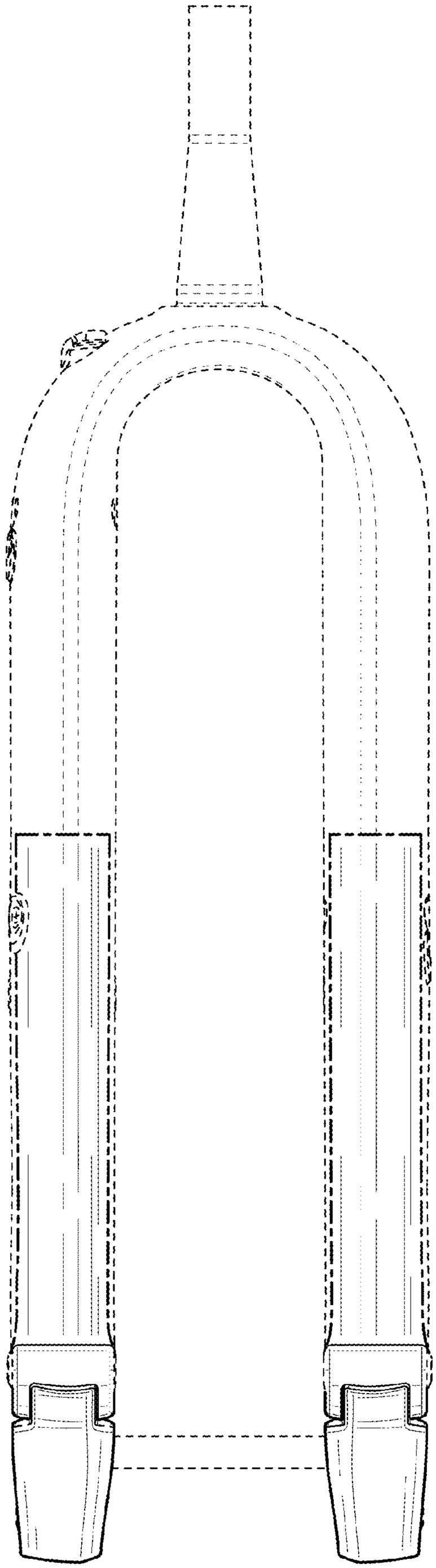

FIG.3

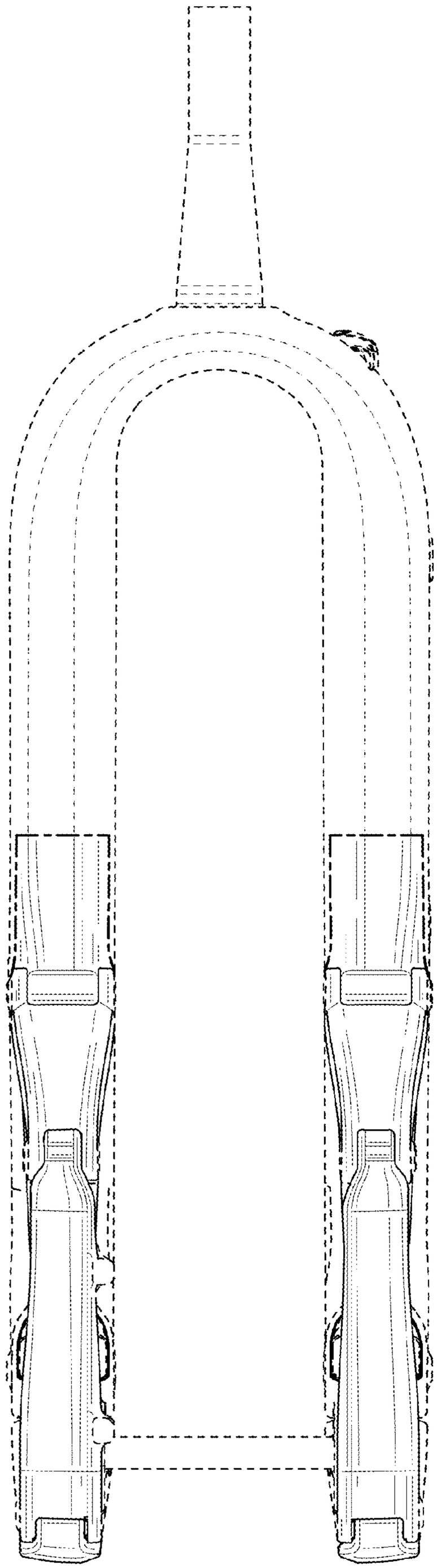

FIG.4

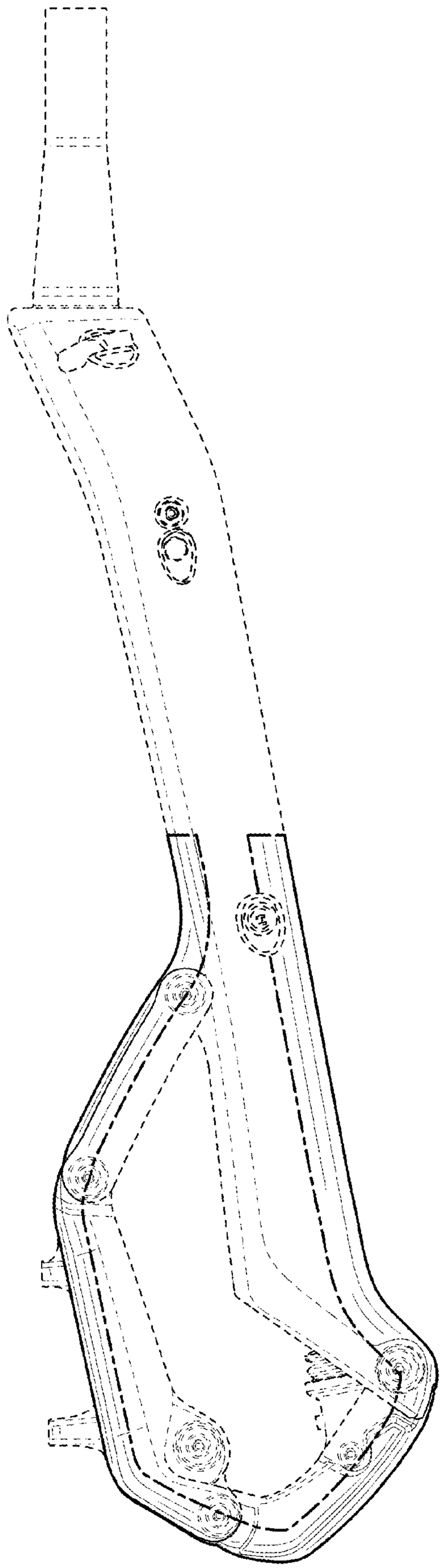

FIG.5

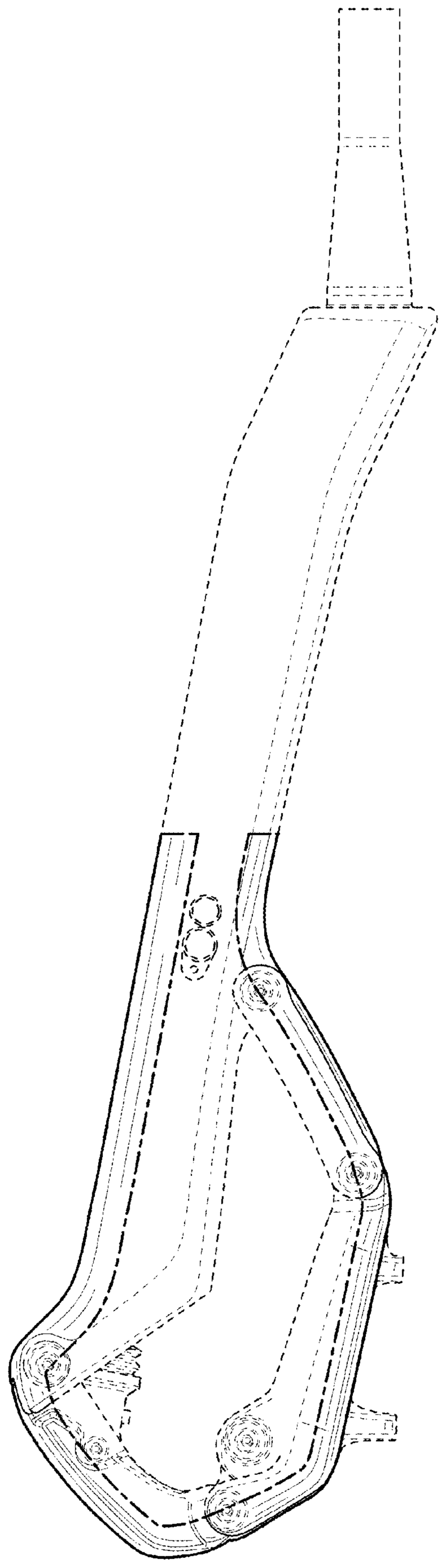

FIG.6

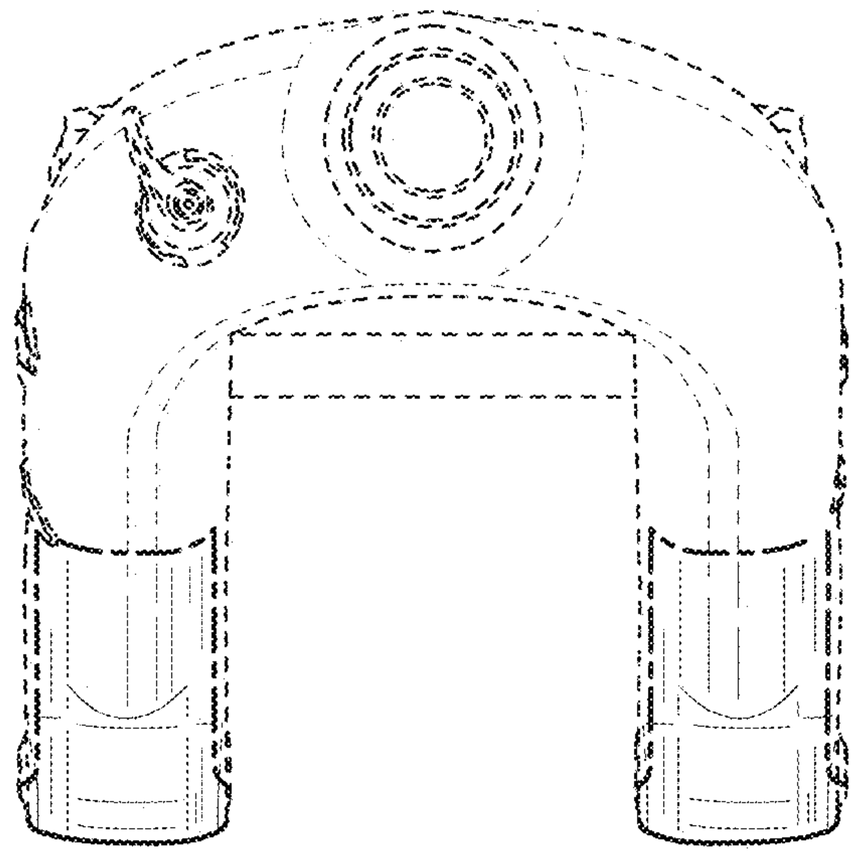

FIG. 7

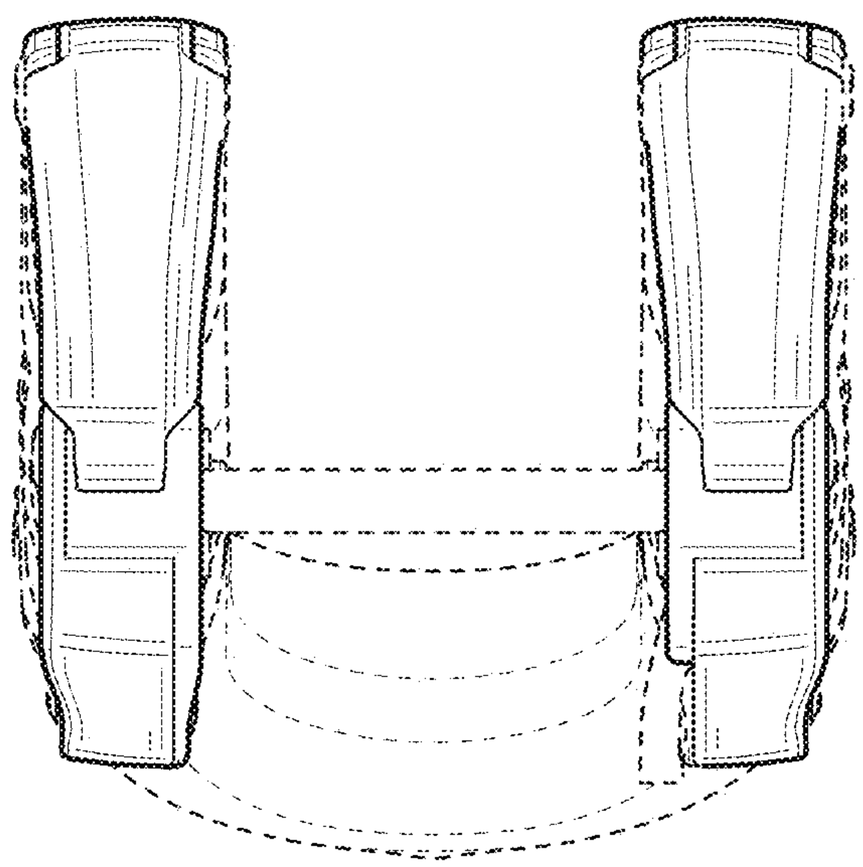

FIG. 8