US00D880298S

(12) United States Design Patent

Spang, Jr. et al.

(10) Patent No.: US D880,298 S
(45) Date of Patent: ** Apr. 7, 2020

(54) **ACTUATOR**

(71) Applicant: **S. C. Johnson & Son, Inc.**, Racine, WI (US)

(72) Inventors: **Ronald H. Spang, Jr.**, Kenosha, WI (US); **Richard M. Parysek**, Oak Creek, WI (US); **Steven A. Zach**, Waterford, WI (US); **Marilyn M. Johnson**, Wauwatosa, WI (US); **Imtiaz A. Musaliar**, Evanston, IL (US); **Neema Pourian**, Chicago, IL (US); **Jose L. Padilla**, Cicero, IL (US); **Katherine A. Reiser**, Mount Prospect, IL (US)

(73) Assignee: **S. C. Johnson & Son, Inc.**, Racine, WI (US)

(**) Term: **15 Years**

(21) Appl. No.: **29/661,390**

(22) Filed: **Aug. 27, 2018**

(51) **LOC (12) Cl.** **09-07**

(52) **U.S. Cl.**
USPC **D9/448**

(58) **Field of Classification Search**
USPC D9/414, 434–436, 438–440, 443–457, D9/499, 503–505, 682, 685, 686; D7/387, 391, 392, 392.1, 396.2–396.4, D7/401.1, 507, 509–511, 538, 900; D3/202, 203.2, 318; D28/91.1; D23/365, D23/366; D26/9, 22, 118, 131, 135; D11/152–154
CPC .. A61J 1/00; A61J 1/1412; B65D 1/00; B65D 1/02; B65D 1/10; B65D 1/46; B65D 5/46; B65D 41/00; B65D 41/38; B65D 41/56; B65D 41/62; B65D 47/00; B65D 47/06; B65D 47/08; B65D 2251/00; B65D 2543/00046; B65D 2543/00092; B65D 2543/00296; B65D 2585/56; B65D 2585/545
See application file for complete search history.

(56) **References Cited**

U.S. PATENT DOCUMENTS

D198,547	S		6/1964	Vuillemenot	
D222,036	S	*	9/1971	Carpenter	D9/448
D229,825	S	*	1/1974	Hayes	D9/448
D232,499	S	*	8/1974	Martinelli	D9/445
D236,252	S	*	8/1975	Sette	D9/448
D238,934	S	*	2/1976	Corba	D9/448
5,738,251	A		4/1998	Schuckmann	
6,095,377	A		8/2000	Sweeton et al.	
6,116,472	A		9/2000	Wanbaugh et al.	
6,286,728	B1		9/2001	Driskell et al.	
6,332,562	B1		12/2001	Sweeton	
6,378,786	B1		4/2002	Beeston et al.	
RE38,022	E		3/2003	De Laforcade	
D476,558	S		7/2003	Cho et al.	
D488,535	S		4/2004	Foster et al.	
6,722,532	B2		4/2004	Lasserre et al.	
D489,970	S		5/2004	Nelson et al.	
6,758,373	B2		7/2004	Jackson et al.	
6,834,778	B2		12/2004	Jinbo et al.	
6,860,411	B2		3/2005	Stradella	
D507,493	S		7/2005	Nelson et al.	
D510,408	S		10/2005	Bitowft et al.	
6,978,946	B2		12/2005	Sweeton	
D514,933	S		2/2006	Bitowft et al.	
7,028,866	B2		4/2006	Kunesh et al.	
D525,123	S		7/2006	Walters et al.	
D528,418	S		9/2006	Kuo	
7,108,159	B2		9/2006	Stradella	
7,137,536	B2		11/2006	Walters et al.	
7,137,537	B2		11/2006	Rueschhoff et al.	
7,140,515	B2		11/2006	Cardwell, III et al.	
D534,077	S		12/2006	Paas et al.	
D535,188	S		1/2007	Lee	
D537,359	S		2/2007	Butler et al.	
D538,650	S		3/2007	Paas et al.	
D539,142	S		3/2007	Butler et al.	
7,204,393	B2		4/2007	Strand	
D545,190	S		6/2007	Wu	
D548,078	S		8/2007	Foster	
D552,991	S		10/2007	Lai	
7,296,712	B2		11/2007	Stradella	
D559,682	S		1/2008	Meeker et al.	
7,325,705	B2		2/2008	Sweeton	
7,344,053	B2		3/2008	Sweeton	
7,350,675	B2		4/2008	Sweeton	
7,360,672	B2		4/2008	Sweeton	
D569,723	S	*	5/2008	Sellick	D9/448
D571,206	S	*	6/2008	Sweeton	D9/448
D580,761	S		11/2008	Sweeton	

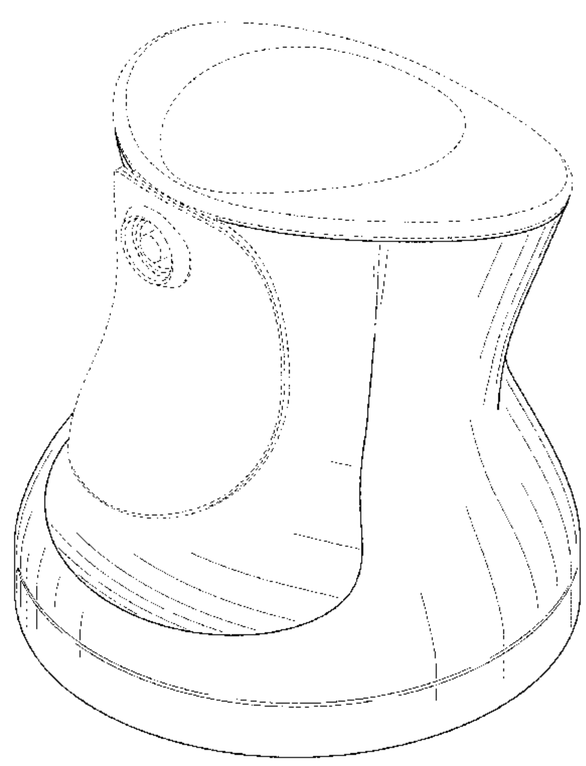

7,455,198	B2	11/2008	Foster et al.	
D581,789	S	12/2008	Ames et al.	
D582,272	S	12/2008	Cichy	
D583,668	S	12/2008	Sweeton	
D588,456	S	3/2009	Dejong et al.	
7,497,358	B2	3/2009	Clynes et al.	
D590,712	S	4/2009	Sweeton	
D591,612	S	5/2009	Ames et al.	
D595,575	S	7/2009	Cichy	
D598,283	S	8/2009	Ames et al.	
7,571,836	B2	8/2009	Foster et al.	
D600,119	S	9/2009	Sweeton	
D604,610	S	11/2009	Ames et al.	
7,621,468	B2	11/2009	Smith et al.	
D605,953	S	12/2009	Wang Treadway et al.	
7,637,396	B2	12/2009	Foster et al.	
7,641,079	B2	1/2010	Lott et al.	
7,677,416	B2	3/2010	Foster et al.	
7,721,920	B2	5/2010	Ruiz De Gopegui et al.	
7,757,567	B2	7/2010	Joyce et al.	
7,784,650	B2	8/2010	Bates et al.	
D623,071	S	9/2010	Driskell et al.	
D627,224	S	11/2010	Bass et al.	
D634,194	S	3/2011	Driskell et al.	
D639,160	S	6/2011	Jug et al.	
D645,745	S	9/2011	Driskell et al.	
8,016,167	B2	9/2011	Tomkins et al.	
D647,805	S	11/2011	Broen et al.	
D649,048	S *	11/2011	Baker	D9/435
D649,456	S *	11/2011	Baker	D9/448
8,066,155	B2	11/2011	Tada	
8,123,082	B2	2/2012	Hayton et al.	
D660,150	S	5/2012	Fournet	
8,167,176	B2	5/2012	Stradella	
D661,987	S	6/2012	Broen et al.	
8,196,784	B2	6/2012	Tomkins et al.	
8,201,714	B2	6/2012	Tomkins et al.	
D665,260	S	8/2012	Driskell et al.	
D673,448	S *	1/2013	Cohen	D9/434
D674,469	S	1/2013	Boyer	
D674,695	S	1/2013	Thurin et al.	
D675,103	S	1/2013	Broen et al.	
8,444,026	B2	5/2013	Adams et al.	
8,499,984	B2	8/2013	Strand	
D697,815	S	1/2014	Broen et al.	
D705,651	S	5/2014	Neumann et al.	
D710,200	S	8/2014	Takizawa et al.	
D710,697	S	8/2014	Lind	
D713,251	S	9/2014	Driskell et al.	
8,840,045	B2	9/2014	Thurin et al.	
8,863,995	B2	10/2014	Stegeman	
8,881,944	B2	11/2014	Paas et al.	
D718,624	S	12/2014	Hanson	
8,936,180	B2	1/2015	Sell	
D721,961	S	2/2015	Takizawa et al.	
D723,368	S	3/2015	Checklin et al.	
8,998,041	B2	4/2015	Strand	
9,004,324	B2	4/2015	Adams et al.	
D731,321	S	6/2015	Farrell et al.	
9,061,816	B2	6/2015	Best et al.	
9,061,817	B2	6/2015	Lind et al.	
D735,036	S *	7/2015	Broen	D9/448
D746,135	S	12/2015	Lind	
D752,977	S	4/2016	Herbst et al.	
D758,878	S	6/2016	Hoeke et al.	
9,375,593	B2	6/2016	Fishman et al.	
D761,650	S	7/2016	Hoeke et al.	
9,435,120	B2	9/2016	Hanson et al.	
9,475,635	B2	10/2016	Driskell et al.	
D773,929	S	12/2016	Richard et al.	
D777,033	S	1/2017	Takizawa et al.	
D787,326	S	5/2017	Hanson et al.	
D790,342	S	6/2017	Farrell et al.	
9,738,436	B2	8/2017	Sell	
D796,322	S	9/2017	Hanson	
9,758,294	B2	9/2017	McDaniel et al.	
D866,325	S *	11/2019	Tu	D9/448
2004/0140328	A1	7/2004	Pericard et al.	
2004/0222246	A1	11/2004	Bates et al.	
2008/0290120	A1	11/2008	Helf et al.	
2009/0114215	A1	5/2009	Boeck et al.	
2011/0108583	A1	5/2011	Sell et al.	
2013/0146611	A1	6/2013	Sell	
2014/0084026	A1	3/2014	Gillespie et al.	
2014/0110440	A1	4/2014	Good et al.	
2014/0209633	A1 *	7/2014	McDaniel	B65D 83/38 222/95
2017/0305645	A1	10/2017	Sell	

FOREIGN PATENT DOCUMENTS

CA	104739	S	1/2005
CA	124466	S	1/2009
CA	129347	S	1/2009
CA	129348	S	1/2009
CA	129349	S	1/2009
CA	2656031	C	10/2013
CA	2618034	C	3/2014
CN	1257017	C	5/2006
CN	100534631	C	9/2009
CN	103619728	B	3/2016
EM	000097969-0001		11/2003
EM	000385471-0001		8/2005
EM	000385471-0002		8/2005
EM	000385471-0003		8/2005
EM	000385471-0004		8/2005
EM	000385489-0001		8/2005
EM	000385489-0002		8/2005
EM	000385489-0003		8/2005
EM	000385489-0004		8/2005
EM	000405980-0001		9/2005
EM	000405980-0002		9/2005
EM	000452354-0001		12/2005
EM	000452354-0002		12/2005
EM	000452354-0003		12/2005
EM	000452354-0004		12/2005
EM	000647839-0001		1/2007
EM	000860259-0001		1/2008
EM	000860259-0002		1/2008
EM	000860259-0003		1/2008
EM	000860259-0004		1/2008
EM	000860259-0005		1/2008
EM	000860259-0006		1/2008
EM	000971221-0001		7/2008
EM	001009054-0001		9/2008
EM	001009054-0002		9/2008
EM	001009054-0003		9/2008
EM	001009054-0004		9/2008
EM	001009054-0005		9/2008
EM	001009054-0006		9/2008
EM	002070086-0001		7/2012
EM	002070086-0002		7/2012
EM	002182121-0001		2/2013
EM	002182121-0002		2/2013
EM	002182121-0003		2/2013
EM	002511758-0004		7/2014
EM	002511758-0005		7/2014
EM	003534486-0001		12/2016
EM	003534486-0002		12/2016
EP	2297003	A2	3/2011
EP	2346748	A1	7/2011
JP	1336737	S	6/2008
JP	1336738	S	6/2008
JP	2015030460	A	2/2015
MX	247079	B	7/2007
MX	283783	B	2/2011
MX	2010013544	A	2/2011
MX	2013002100	A	5/2013
MX	354198	B	2/2018
WO	2009152112	A1	12/2009
WO	2010008462	A2	1/2010
WO	2010056724	A1	5/2010
WO	DM076856		5/2011
WO	2012166793	A1	12/2012
WO	DM081741		9/2013
WO	DM082807		11/2013
WO	DM082809		11/2013
WO	2016163987	A1	10/2016

OTHER PUBLICATIONS

"Pink Fine Mist Sprayer & Dip Tube for 5 oz. Bottle | U.S. Plastic Corp," United States Plastic Corp., 2 pages. Retrieved from Internet on Dec. 5, 2017, URL: https://www.usplastic.com/catalog/item.aspx?itemid=126360&catid=470.
"Plastic Continuous Fine Mist Spray Bottle Finger Sprayer Bottle Rd-107x," Alibaba.com, 13 pages. Retrieved from Internet on Dec. 5, 2017, URL: https://www.alibaba.com/product-detail/300ML-Plastic-Continuous-Fine-Mist-Spray_60641511667.html?spm=a2700.7724857.main07.21.66de1d87Dy.
"Salon Water spray bottle automatic high pressurized Mist spray Water bottle," eBay, Sep. 18, 2017, 8 pages. Retrieved from Internet on Dec. 5, 2017, URL: https://www.ebay.in/itm/Salon-Water-spray-bottle-automatic-high-pressurized-Mist-spray-Water-bottle-/282550002825?hash=item41c94ae489.
International Search Report and Written Opinion issued in corresponding International Application No. PCT/US2019/048342, dated Nov. 15, 2019, 14 pages.

* cited by examiner

Primary Examiner — Michael A. Pratt
Assistant Examiner — Wendy L Arminio

(57) **CLAIM**

The ornamental design for an actuator, as shown and described.

DESCRIPTION

FIG. **1** is an isometric view of a top, front, and right side of an actuator;
FIG. **2** is a front elevational view of the actuator of FIG. **1**;
FIG. **3** is a rear elevational view of the actuator of FIG. **1**;
FIG. **4** is a right side elevational view of the actuator of FIG. **1**;
FIG. **5** is a left side elevational view of the actuator of FIG. **1**;
FIG. **6** is a top plan view of the actuator of FIG. **1**; and,
FIG. **7** is a bottom plan view of the actuator of FIG. **1**.
The dash-dash-dash-dash broken lines are included for the purpose of illustrating portions that form no part of the claimed design.

1 Claim, 7 Drawing Sheets

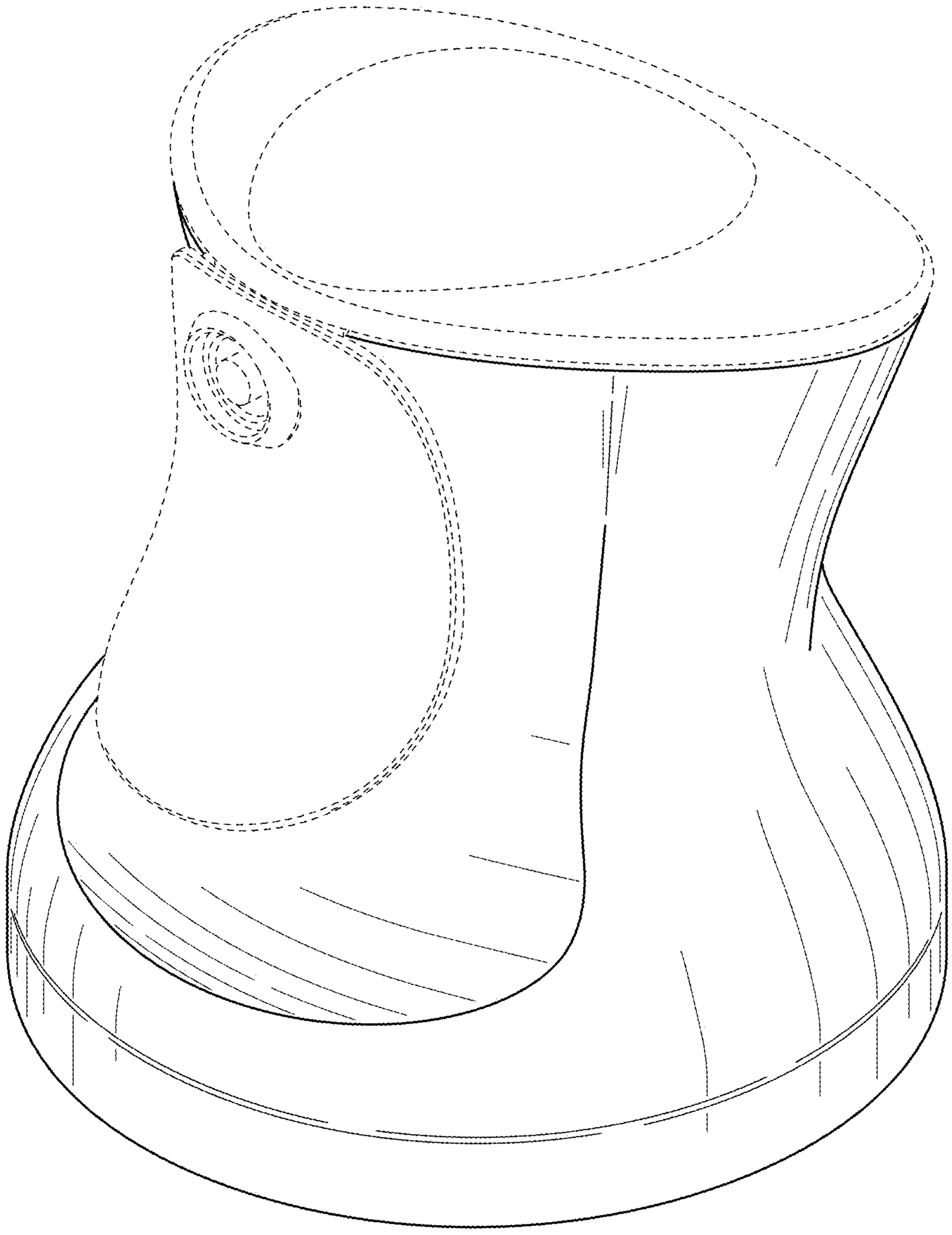

FIG. 1

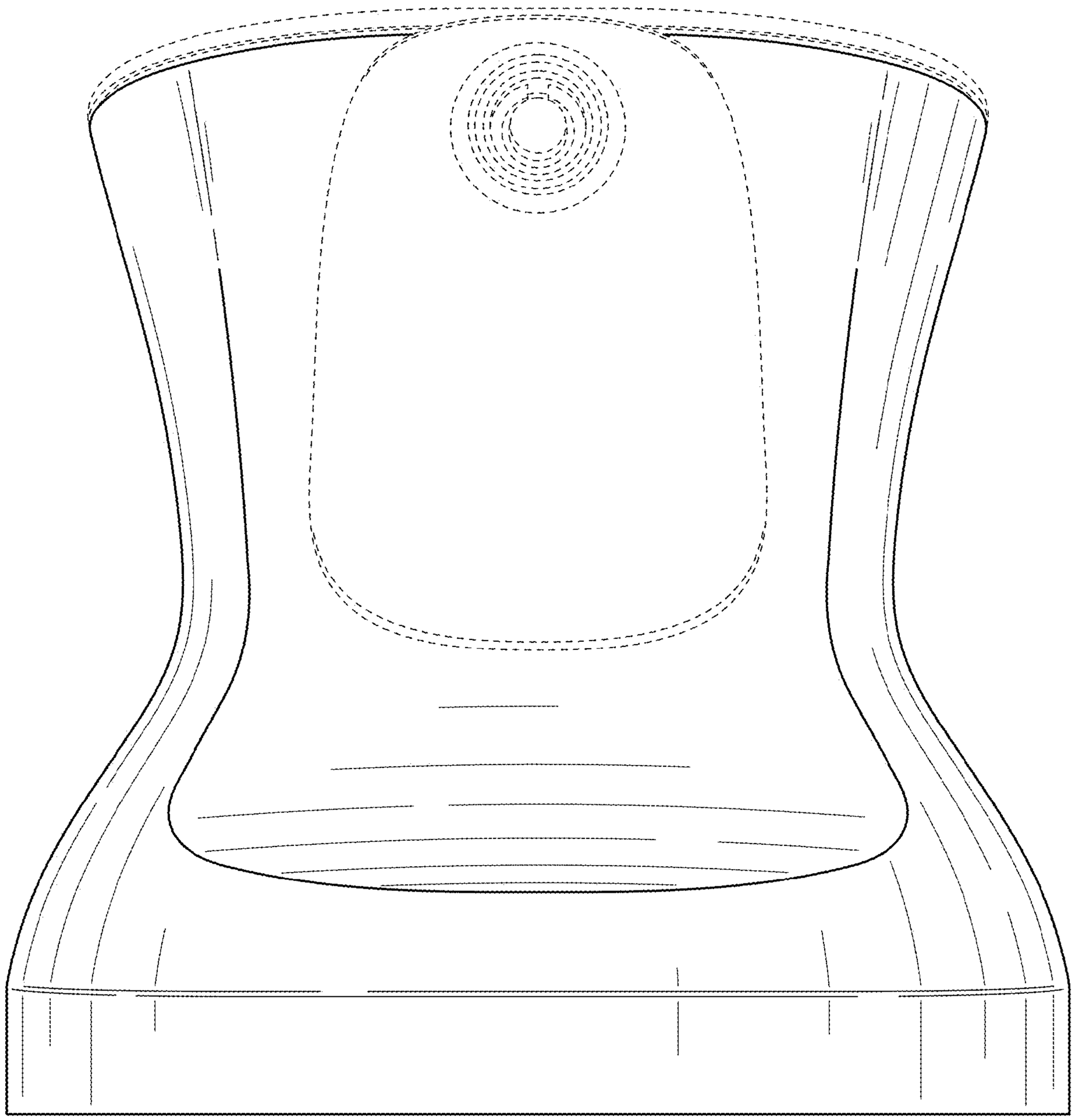

FIG. 2

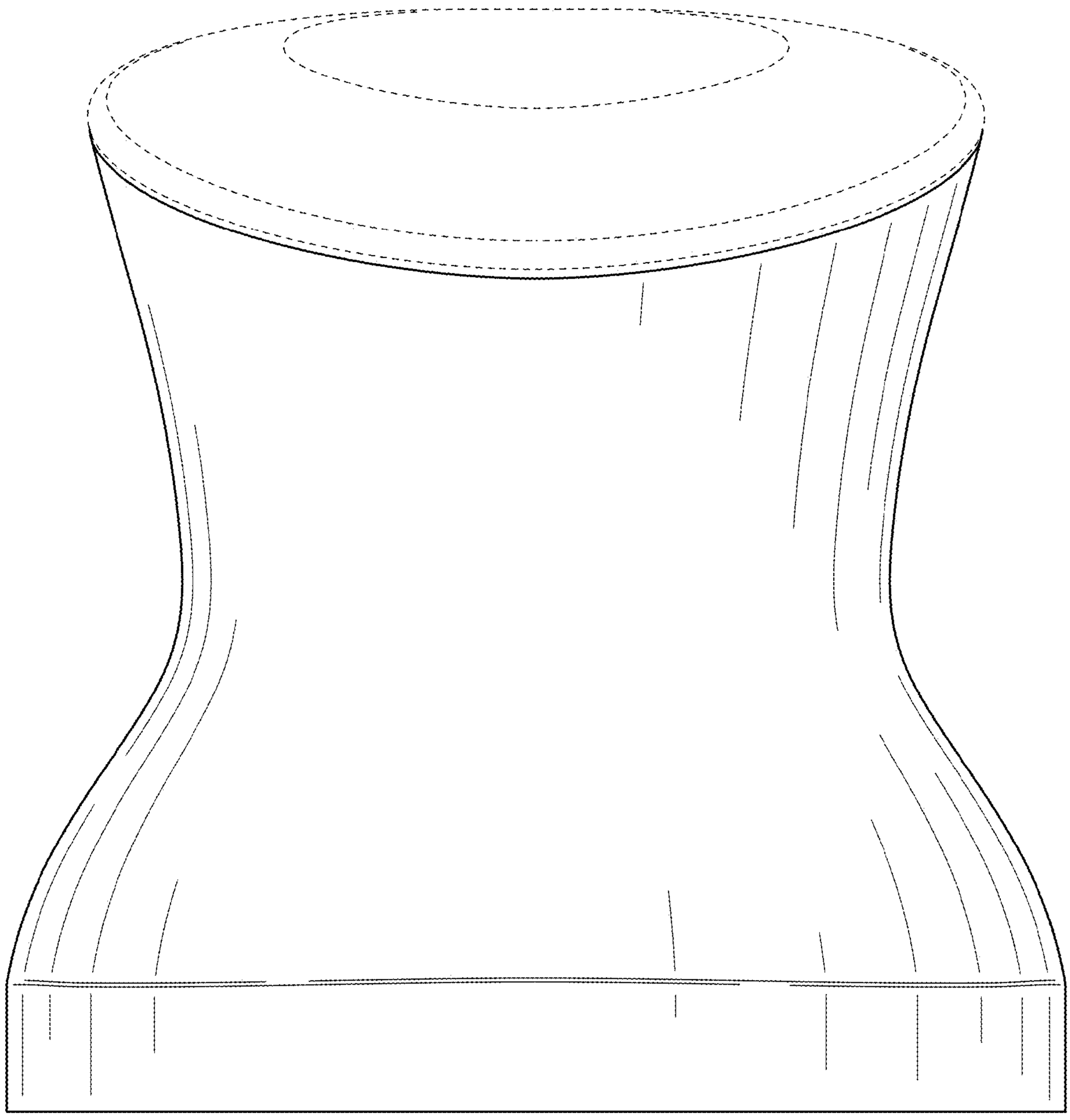

FIG. 3

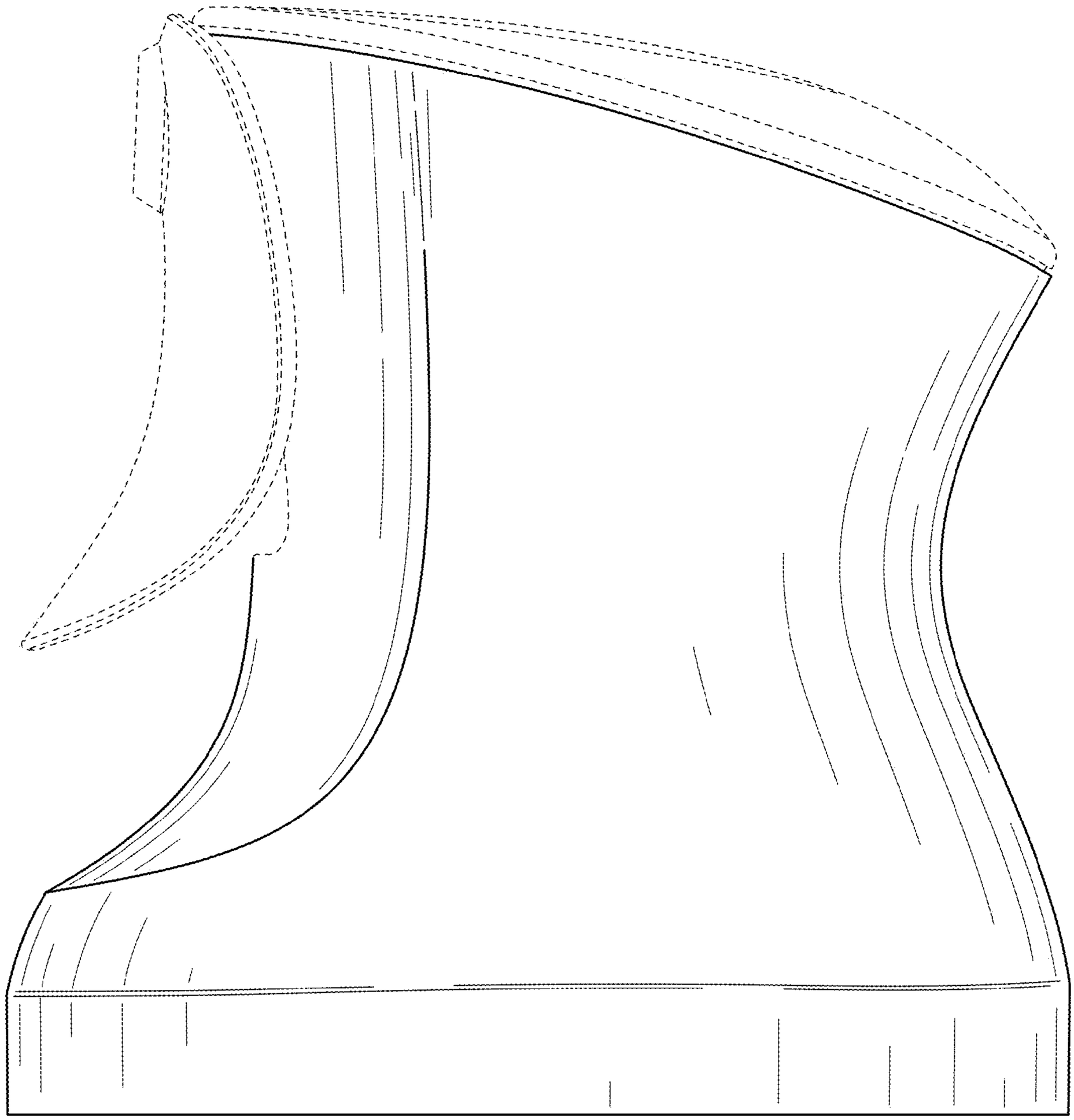

FIG. 4

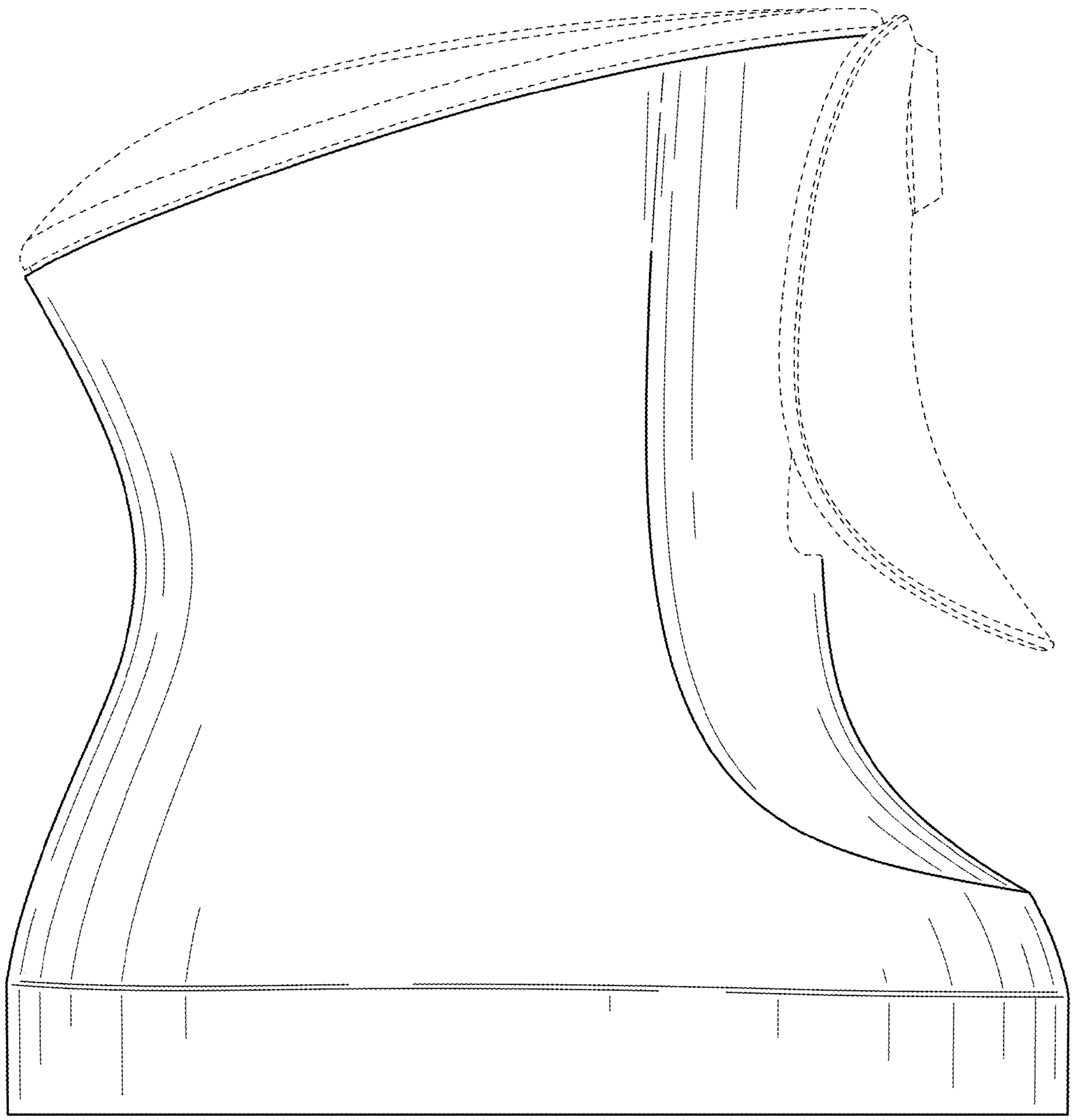

FIG. 5

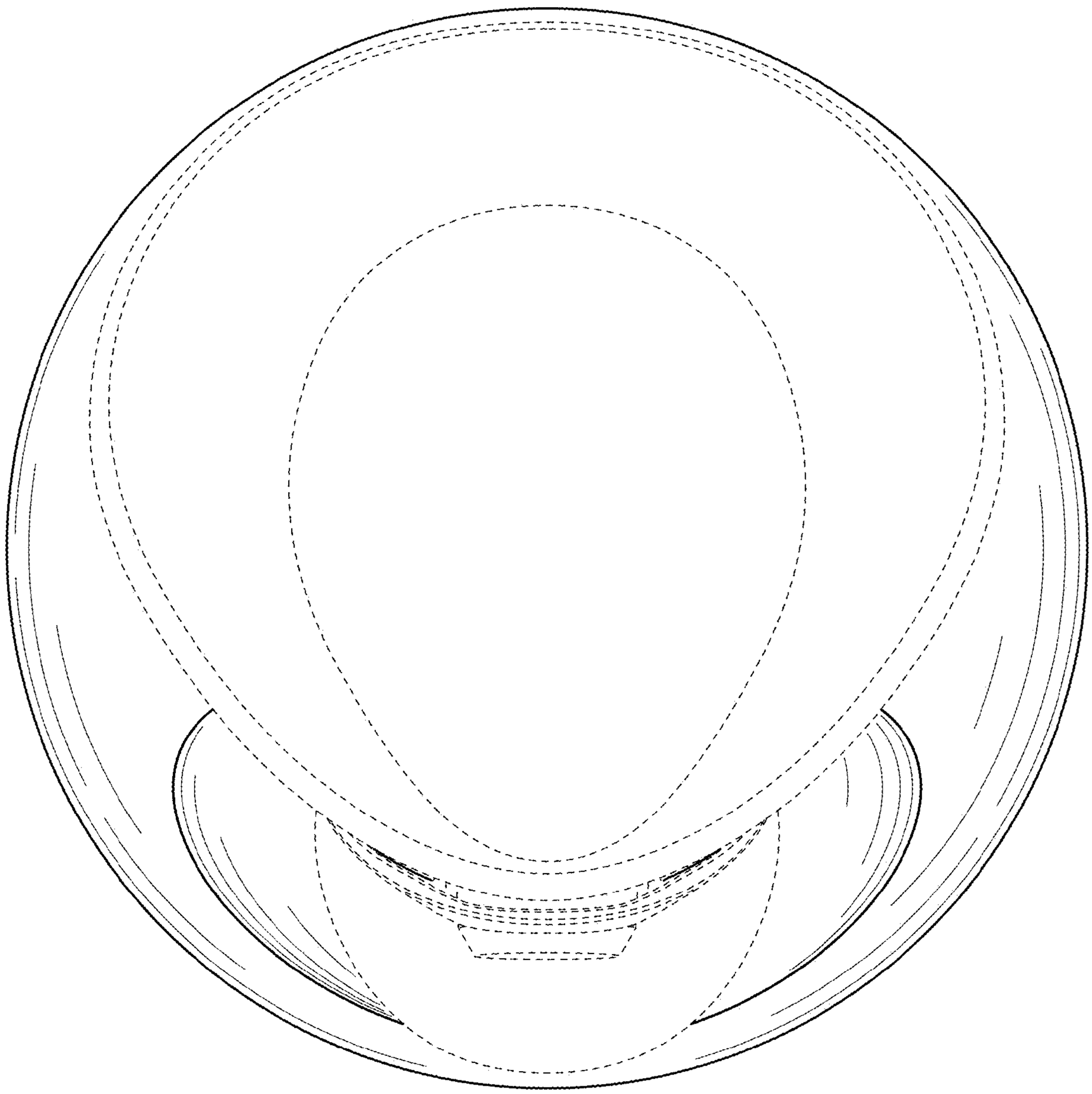

FIG. 6

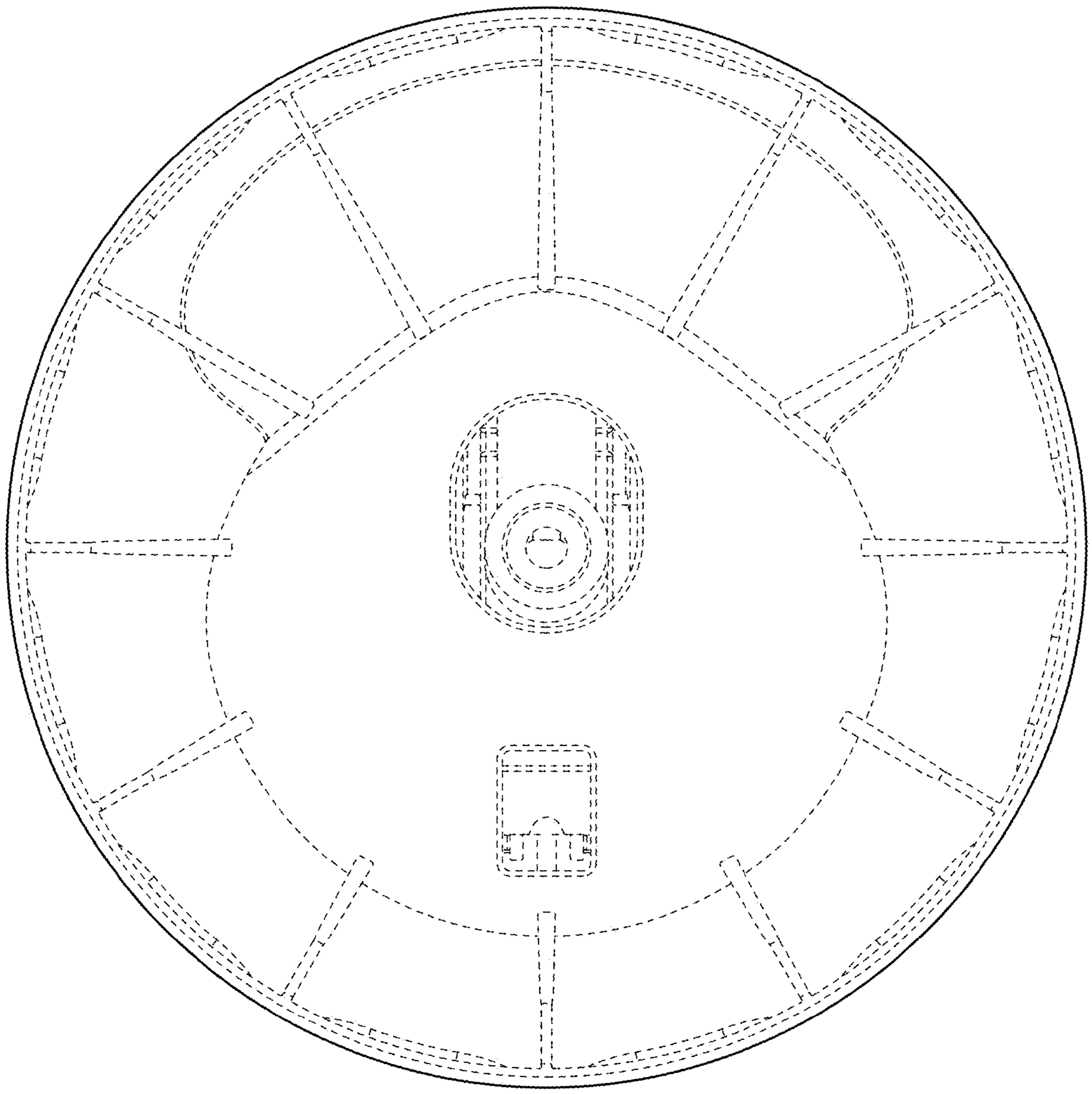

FIG. 7