US00D878552S

(12) United States Design Patent

Hwang et al.

(10) Patent No.: US D878,552 S
(45) Date of Patent: ** Mar. 17, 2020

(54) **WEARABLE DRUG DELIVERY DEVICE**

(71) Applicant: **Becton, Dickinson and Company**, Franklin Lakes, NJ (US)

(72) Inventors: **Charles George Hwang**, Wellesley, MA (US); **John Prudden**, Manchester, MA (US); **Christopher Kovalchick**, Bedford, MA (US); **Russell Cole**, River Vale, NJ (US); **Andrew Allegretti**, Edgewater, NJ (US); **Jeffrey Reed**, Minden, NE (US); **Nir Swenson**, Somerville, MA (US); **Gail Siewiorek**, Winchester, MA (US); **Joseph Iskandar**, Brighton, MA (US); **Alessandro Pizzochero**, Chelmsford, MA (US); **J. Richard Gyory**, Sudbury, MA (US); **Justin Cumming**, Arlington, MA (US); **Kurt Maw**, Salem, MA (US)

(73) Assignee: **Becton, Dickinson and Company**, Franklin Lakes, NJ (US)

(**) Term: **15 Years**

(21) Appl. No.: **29/682,736**

(22) Filed: **Mar. 7, 2019**

Related U.S. Application Data

(63) Continuation of application No. 29/552,312, filed on Jan. 21, 2016, now Pat. No. Des. 857,191.

(51) **LOC (12) Cl.** **24-02**

(52) **U.S. Cl.**
USPC **D24/112**

(58) **Field of Classification Search**
USPC D24/112–114, 133, 186, 104, 130, 127, D24/176, 108, 110, 220; 606/181, 185; 604/232, 187, 158, 164.08, 192, 263, 163, 604/181, 184, 198, 227, 168.01, 275, 604/890.1; D9/414, 424, 417, 426
CPC A61M 2005/14252; A61M 2005/1581; A61M 5/14248; A61M 2005/14513; A61M 2005/206
See application file for complete search history.

(56) **References Cited**

U.S. PATENT DOCUMENTS

D370,011	S	5/1996	Lindeman
5,665,065	A	9/1997	Colman et al.
D389,139	S	1/1998	Oross
5,816,779	A	10/1998	Lawless et al.
5,913,180	A	6/1999	Ryan
6,006,239	A	12/1999	Bhansali et al.
D445,496	S	7/2001	Anderson
6,589,229	B1	7/2003	Connelly et al.
6,656,147	B1	12/2003	Gerlsek et al.
6,656,148	B2	12/2003	Das et al.
6,685,675	B1	2/2004	Hadvary et al.
6,740,059	B2	5/2004	Flaherty
D495,303	S	8/2004	Coullahan
6,824,529	B2	11/2004	Gross et al.
6,843,782	B2	1/2005	Gross et al.
7,052,251	B2	5/2006	Nason et al.
D544,092	S	6/2007	Lewis
D564,087	S	3/2008	Yodfat et al.
D574,016	S	7/2008	Yodfat et al.
D577,118	S	9/2008	Yodfat et al.
7,517,440	B2	4/2009	Anex et al.
7,648,494	B2	1/2010	Kornerup et al.
7,678,079	B2	3/2010	Shermer et al.
7,708,717	B2	5/2010	Estes et al.
D622,685	S	8/2010	Garra
7,771,391	B2	8/2010	Carter
7,802,923	B2	9/2010	Arnold et al.
7,857,131	B2	12/2010	Vedrine
7,922,708	B2	4/2011	Estes et al.
7,927,306	B2	4/2011	Cross et al.
7,931,621	B2	4/2011	Cross et al.
7,938,801	B2	5/2011	Hawkins et al.
7,976,493	B2	7/2011	Carter
7,976,500	B2	7/2011	Adams et al.
8,062,253	B2	11/2011	Nielsen et al.
8,062,256	B2	11/2011	Carter et al.
8,114,064	B2	2/2012	Alferness et al.
8,128,596	B2	3/2012	Carter
8,128,597	B2	3/2012	Cross et al.
8,162,923	B2	4/2012	Adams et al.
8,210,172	B2	7/2012	Crowder
8,226,606	B2	7/2012	Adams et al.
8,226,607	B2	7/2012	Carter et al.
8,231,572	B2	7/2012	Carter et al.
8,231,577	B2	7/2012	Carter et al.
D667,382	S *	9/2012	Cosentino D13/168
8,267,921	B2	9/2012	Yodfat et al.
8,337,486	B2	12/2012	Yodfat et al.
8,352,041	B2	1/2013	Das et al.

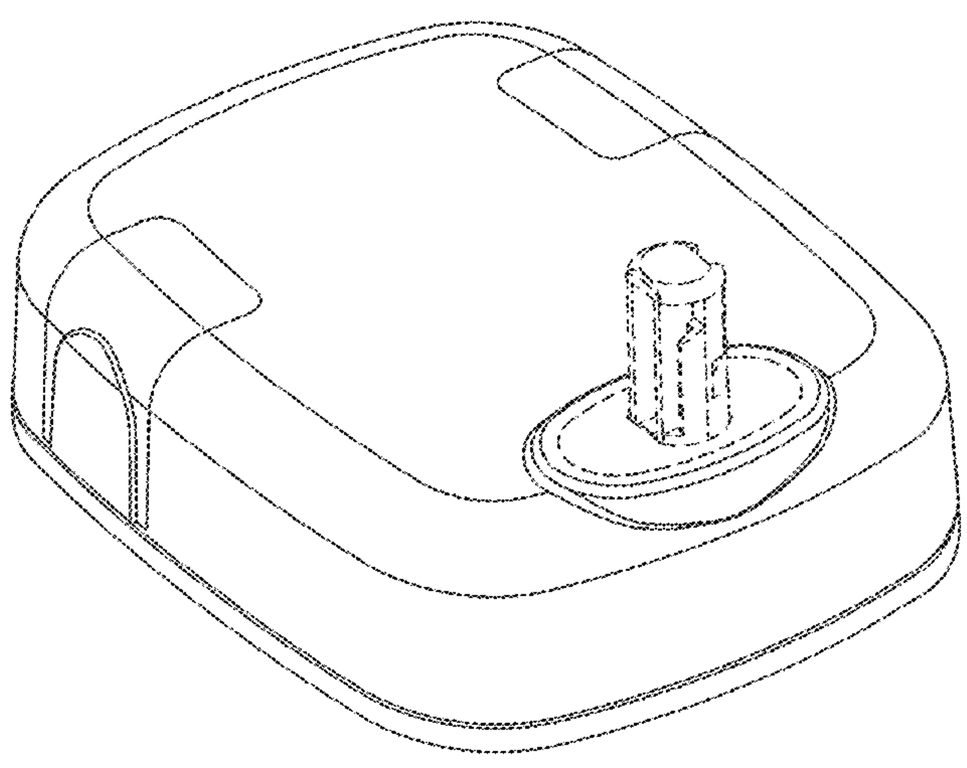

8,361,030 B2 1/2013 Carter
D675,516 S * 2/2013 Horton D9/424
8,409,151 B2 4/2013 Hawkins et al.
8,414,563 B2 4/2013 Kamen et al.
8,449,504 B2 5/2013 Carter et al.
D684,685 S 6/2013 Schneider et al.
D684,686 S 6/2013 Cronenberg
D685,083 S 6/2013 Schneider et al.
D685,084 S 6/2013 Guarraia et al.
8,469,920 B2 6/2013 Mernoe et al.
D687,140 S 7/2013 Guarraia et al.
D687,141 S 7/2013 Schneider et al.
8,491,529 B2 7/2013 Yodfat et al.
D687,536 S 8/2013 Guarraia et al.
D688,784 S 8/2013 Schneider et al.
8,500,692 B2 8/2013 Yodfat et al.
8,512,287 B2 8/2013 Cindrich et al.
D690,588 S * 10/2013 Pipes D9/424
D696,394 S * 12/2013 Lu D24/110
8,613,719 B2 12/2013 Karratt et al.
8,753,310 B2 6/2014 Sullivan et al.
8,753,315 B2 6/2014 Alferness et al.
8,758,308 B2 6/2014 Alferness et al.
8,795,230 B2 8/2014 Schoonmaker et al.
8,795,234 B2 8/2014 Kadamus et al.
8,808,269 B2 8/2014 Bazargan et al.
D714,266 S 9/2014 Okamura
9,220,838 B2 * 12/2015 Soma A61M 1/36
D747,456 S 1/2016 Sonderegger et al.
D747,457 S 1/2016 Glace et al.
D747,458 S 1/2016 Sonderegger et al.
D747,459 S 1/2016 Sonderegger et al.
9,254,373 B2 2/2016 Hørdum
D754,842 S 4/2016 Sonderegger et al.
D754,843 S 4/2016 Sonderegger et al.
D756,504 S 5/2016 Sonderegger et al.
9,364,606 B2 6/2016 Cindrich et al.
9,433,757 B2 9/2016 Constantineau et al.
D769,438 S 10/2016 Crosby
9,480,792 B2 11/2016 Constantineau et al.
9,522,229 B2 12/2016 Sonderegger et al.
9,522,231 B2 12/2016 Schneider et al.
D794,770 S * 8/2017 Wu D24/108
D806,232 S * 12/2017 Hwang D24/112
D812,738 S * 3/2018 Wolford D24/111
9,943,332 B2 * 4/2018 Chong A61M 5/14248
D829,889 S * 10/2018 Hwang D24/112
2005/0064917 A1 * 3/2005 Peng H04M 1/021
455/575.1
2005/0238507 A1 10/2005 Dilanni et al.
2006/0183984 A1 8/2006 Dobbles et al.
2007/0282269 A1 12/2007 Carter et al.
2007/0287960 A1 12/2007 Adams et al.
2007/0299408 A1 12/2007 Alferness et al.
2008/0015494 A1 1/2008 Santini, Jr. et al.
2008/0051738 A1 * 2/2008 Griffin A61M 5/1413
604/273
2008/0119790 A1 5/2008 Hawkins et al.
2008/0167641 A1 7/2008 Hansen et al.
2008/0249473 A1 10/2008 Rutti et al.
2009/0062768 A1 3/2009 Saul
2009/0088692 A1 4/2009 Adams et al.
2009/0182277 A1 7/2009 Carter
2009/0198215 A1 * 8/2009 Chong A61M 5/1413
604/506
2009/0240240 A1 9/2009 Hines et al.
2009/0247982 A1 10/2009 Krulevitch et al.
2009/0254041 A1 10/2009 Krag
2009/0281497 A1 11/2009 Kamen et al.
2010/0049128 A1 2/2010 McKenzie et al.
2010/0167385 A1 7/2010 Celentano et al.
2010/0204657 A1 8/2010 Yodfat et al.
2010/0234805 A1 9/2010 Kaufmann et al.
2011/0098652 A1 4/2011 Hasted et al.
2011/0282293 A1 11/2011 Hørdum
2011/0306931 A1 12/2011 Kamen et al.
2011/0319862 A1 12/2011 Friedman et al.
2012/0053522 A1 3/2012 Yodfat et al.
2012/0150115 A1 6/2012 Kamen et al.
2012/0209241 A1 8/2012 Drew
2012/0215175 A1 8/2012 Alferness et al.
2013/0072872 A1 3/2013 Yodfat et al.
2013/0138078 A1 * 5/2013 Smith A61M 5/14248
604/506
2013/0226092 A1 8/2013 Hawkins et al.
2014/0088504 A1 3/2014 King
2014/0148756 A1 5/2014 Yodfat et al.
2014/0236086 A1 8/2014 Levesque et al.
2014/0236087 A1 8/2014 Alderete, Jr. et al.
2015/0065959 A1 3/2015 Carter et al.
2015/0250943 A1 9/2015 Momose
2015/0292779 A1 10/2015 Chen
2015/0306307 A1 10/2015 Cole
2016/0089491 A1 * 3/2016 Smith A61M 5/1452
604/500
2016/0303333 A1 * 10/2016 Momose A61M 5/3298
2017/0021096 A1 * 1/2017 Cole A61M 5/158
2017/0021137 A1 * 1/2017 Cole A61M 25/0606
2017/0043101 A1 * 2/2017 Cole A61M 25/0631
2017/0348479 A1 * 12/2017 Choate A61M 5/14248
2018/0028747 A1 * 2/2018 Hanson A61M 5/1456
2019/0022317 A1 * 1/2019 Uddin G16H 20/17
2019/0038790 A1 * 2/2019 McLaughlin A61L 2/206
2019/0038828 A1 * 2/2019 McLaughlin A61M 5/001
2019/0083702 A1 * 3/2019 Nekouzadeh A61M 5/20
2019/0192765 A1 * 6/2019 Kim A61M 5/142

FOREIGN PATENT DOCUMENTS

CN 101801438 B 6/2013
CN 103394143 A 11/2013
JP 2013070863 A 4/2013
JP 2014145329 A 8/2014
WO WO-2009013736 A1 1/2009
WO WO-2009045780 A2 4/2009
WO WO-2009117466 A1 9/2009
WO WO-2015199981 A1 12/2015

OTHER PUBLICATIONS

Japanese Official Notice of Rejection dated Apr. 16, 2019, which issued in counterpart Japanese Patent Application No. 2017-515804, including English translation.
PAQ®, a Simple 3-Day Basal/Bolus Insuiln Delivery Device, for People with Type 2 Diabetes, CeQur Corporation, Abstract from ATTD 2016, 9th International Conference on Advanced Technologies & Treatments for Diabetes, Milan, Italy—Feb. 3-6, 2016, 1 page.
Human Factor Testing Provided Valuable Input into the Iterative Optimization of PAQ®, CeQur Corporation, Abstract from ATTD 2016, 9th International Conference on Advanced Technologies & Treatments for Diabetes, Milan, Italy—Feb. 3-6, 2016, 1 page.
Validation of Adhesive Tape Optimization of PAQ®, a Simple 3-Day Wearable Basal/Bolus Insulin Delivery Device, in Normal Volunteers, CeQur Corporation, Abstract from ATTD 2016, 9th International Conference on Advanced Technologies & Treatments for Diabetes, Milan, Italy—Feb. 3-6, 2016, 1 page.
PAQ®, a Simple 3-Day Wearable Basal/Bolus Insulin Delivery Device, Designed for Discreet Diabetes Management, CeQur Corporation, Abstract from ATTD 2016, 9th International Conference on Advanced Technologies & Treatments for Diabetes, Milan, Italy—Feb. 3-6, 2016, 1 page.

* cited by examiner

Primary Examiner — Nathan M Johnston
(74) *Attorney, Agent, or Firm* — Dickinson Wright PLLC

(57) **CLAIM**

The ornamental design for a wearable drug delivery device, as shown and described.

DESCRIPTION

FIG. **1** is a top perspective view of a wearable drug delivery device showing our new design;

FIG. **2** is a bottom perspective view thereof;
FIG. **3** is a top plan view thereof;
FIG. **4** is a left side elevation view thereof;
FIG. **5** is a right side elevation view thereof;
FIG. **6** is a front elevation view thereof;
FIG. **7** is a rear elevation view thereof; and,
FIG. **8** is a bottom plan view thereof.
The broken lines show portions of the design that form no part of the claimed design.

1 Claim, 6 Drawing Sheets

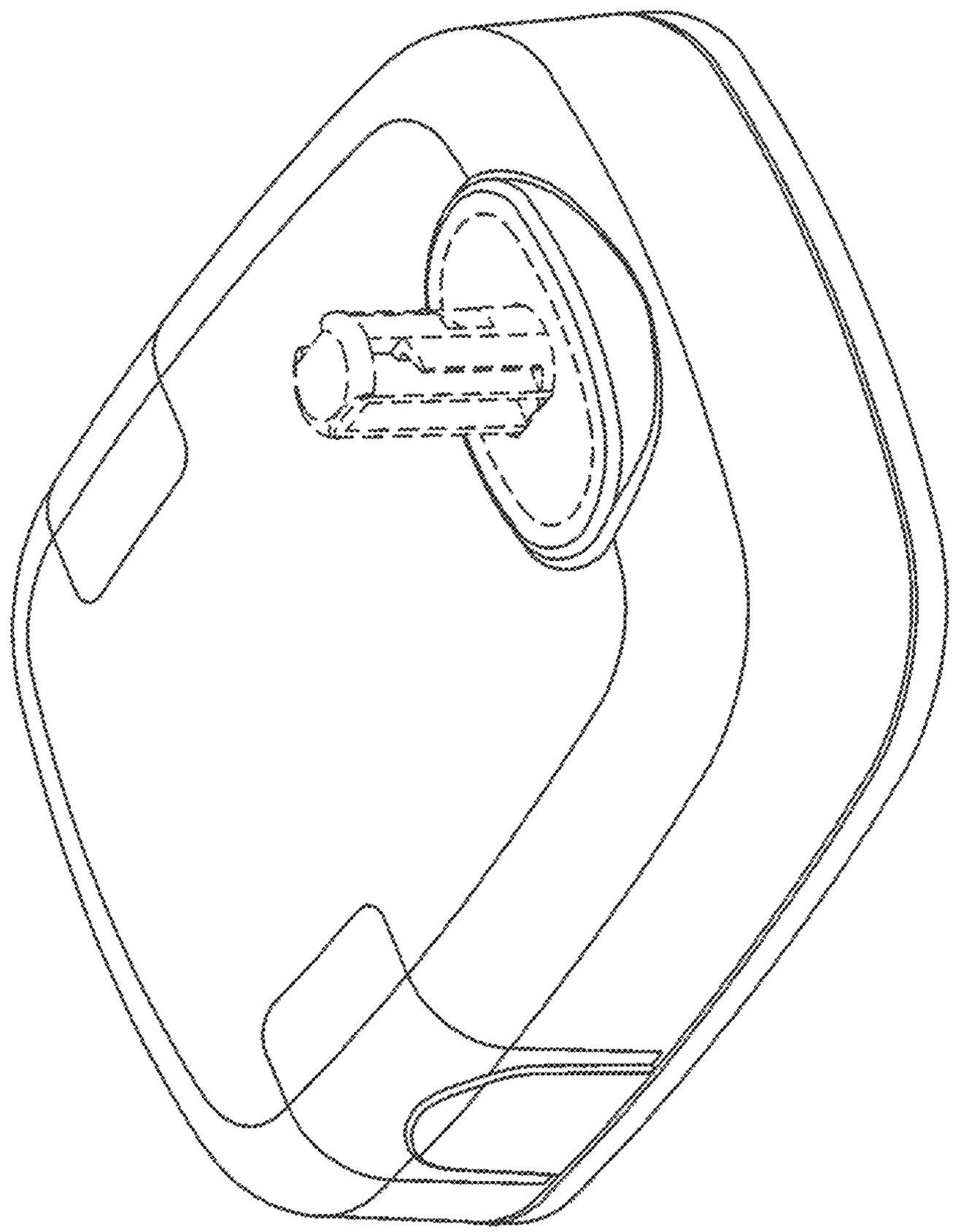

FIG. 1

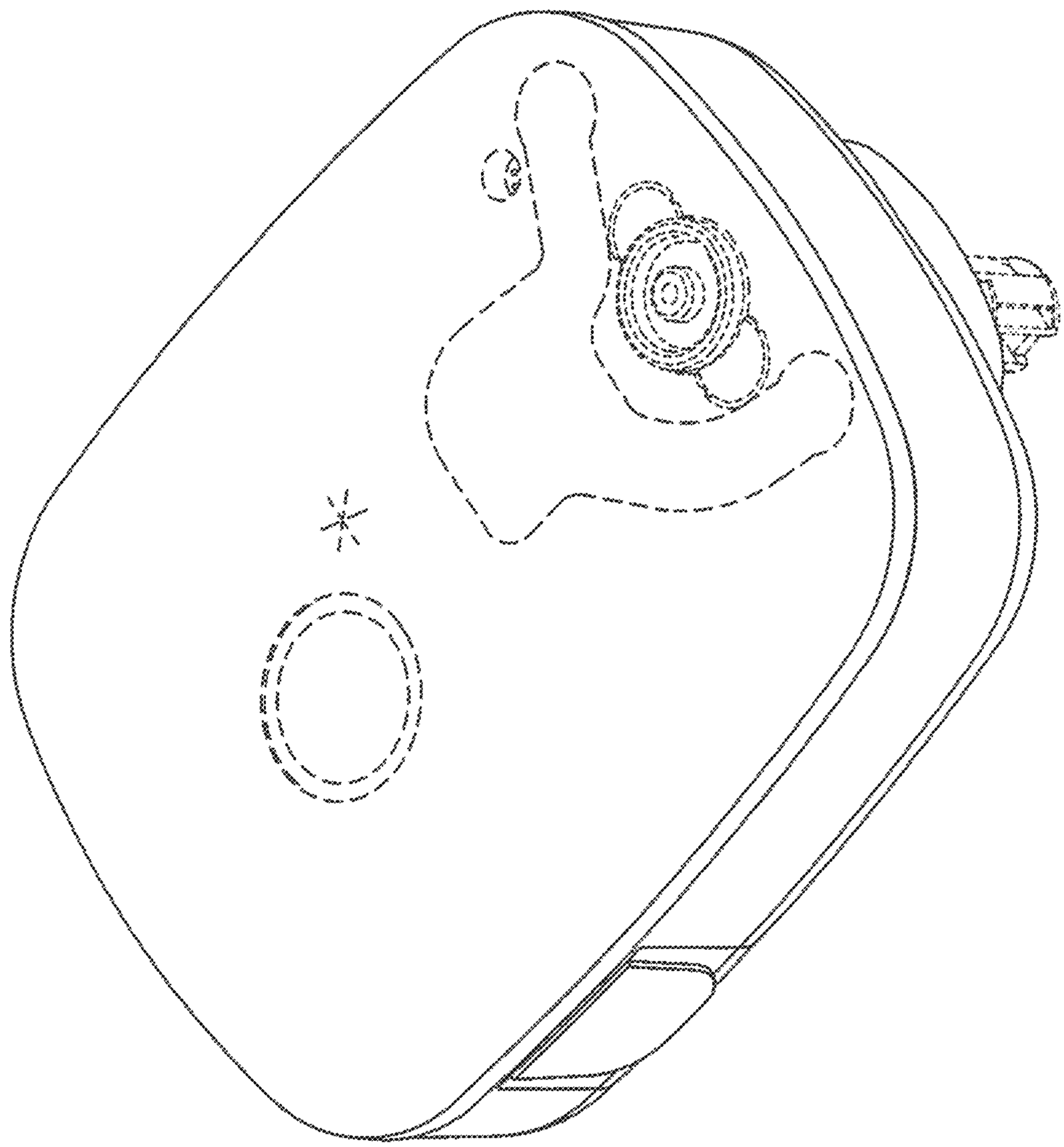

FIG. 2

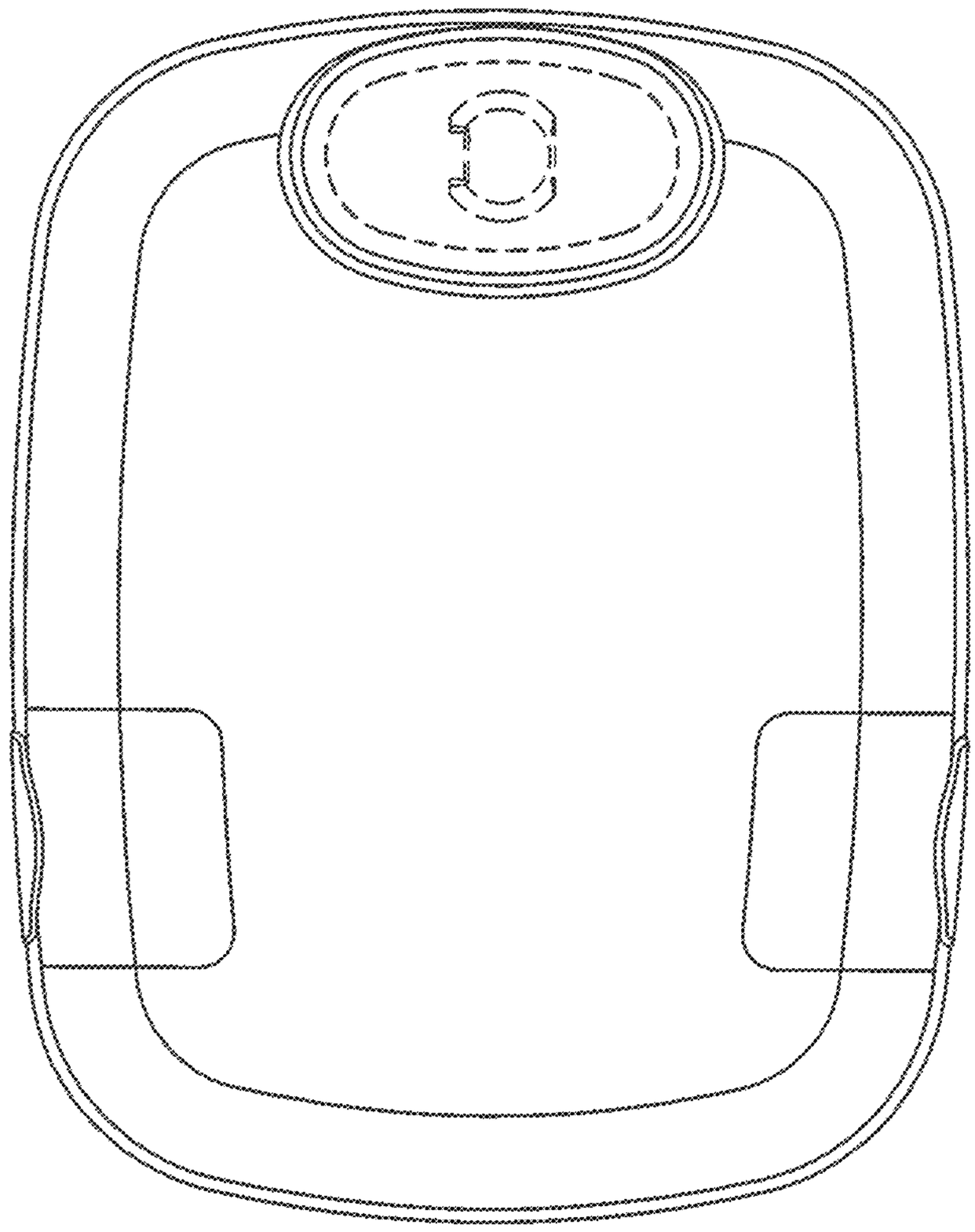

FIG.3

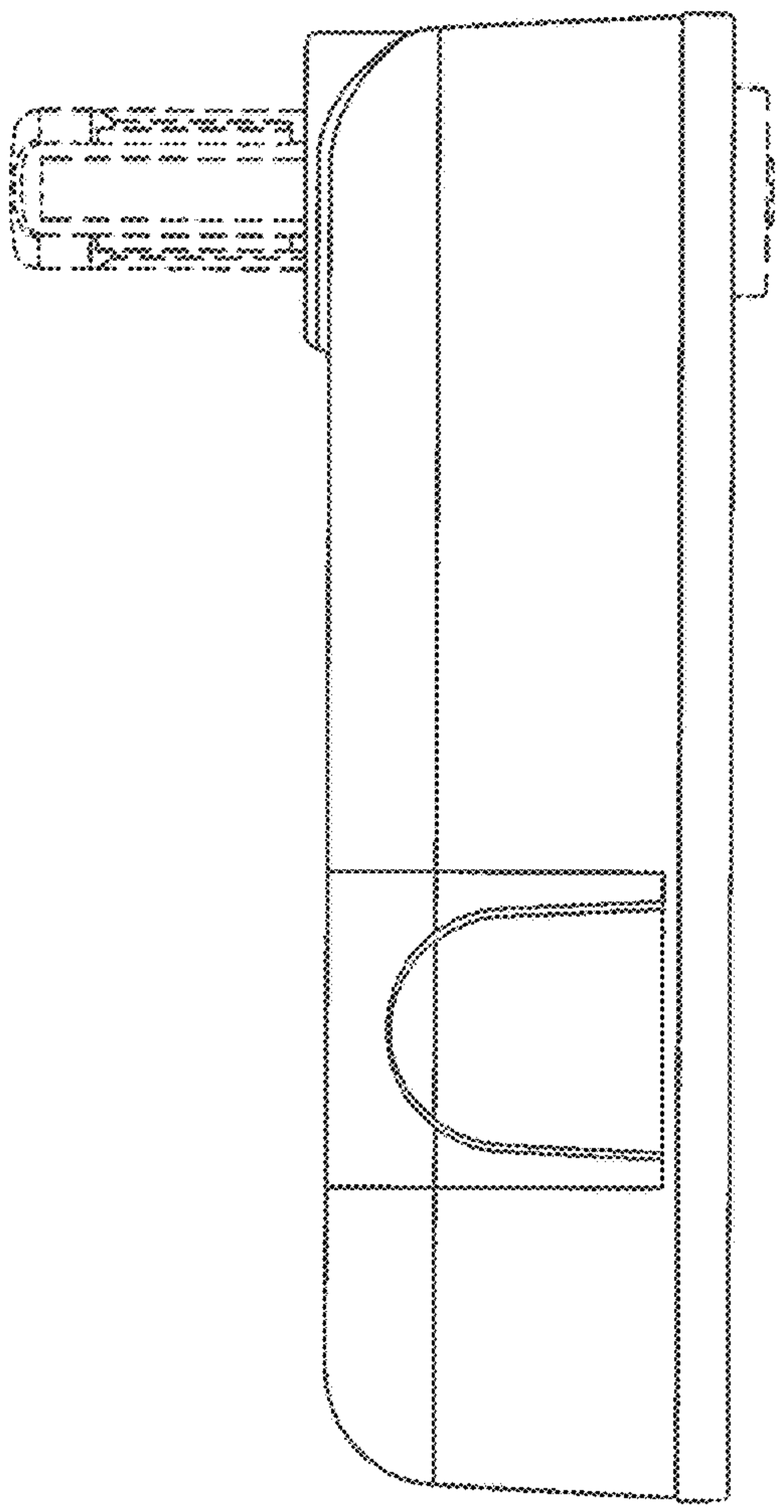

FIG. 4

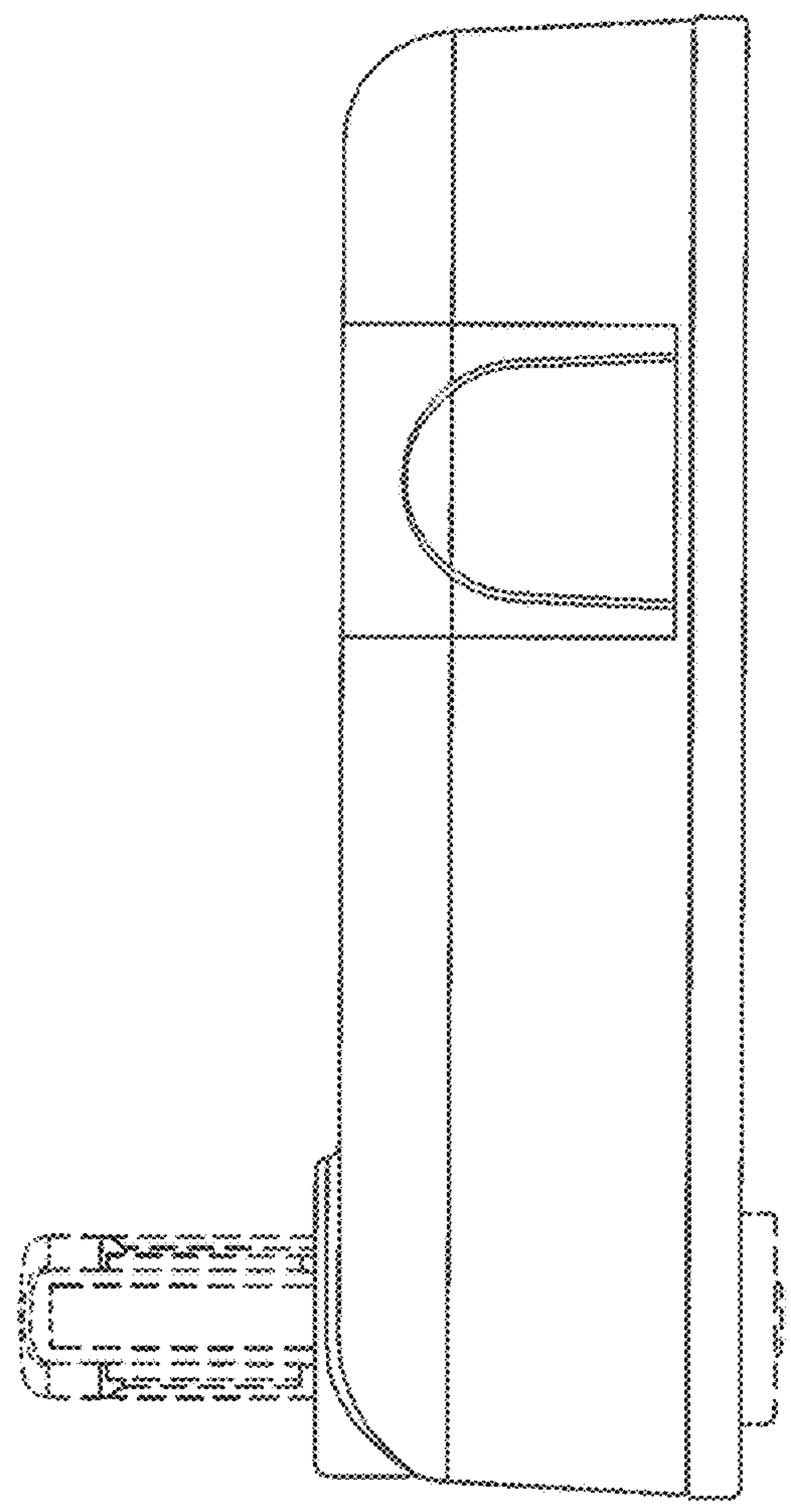

FIG. 5

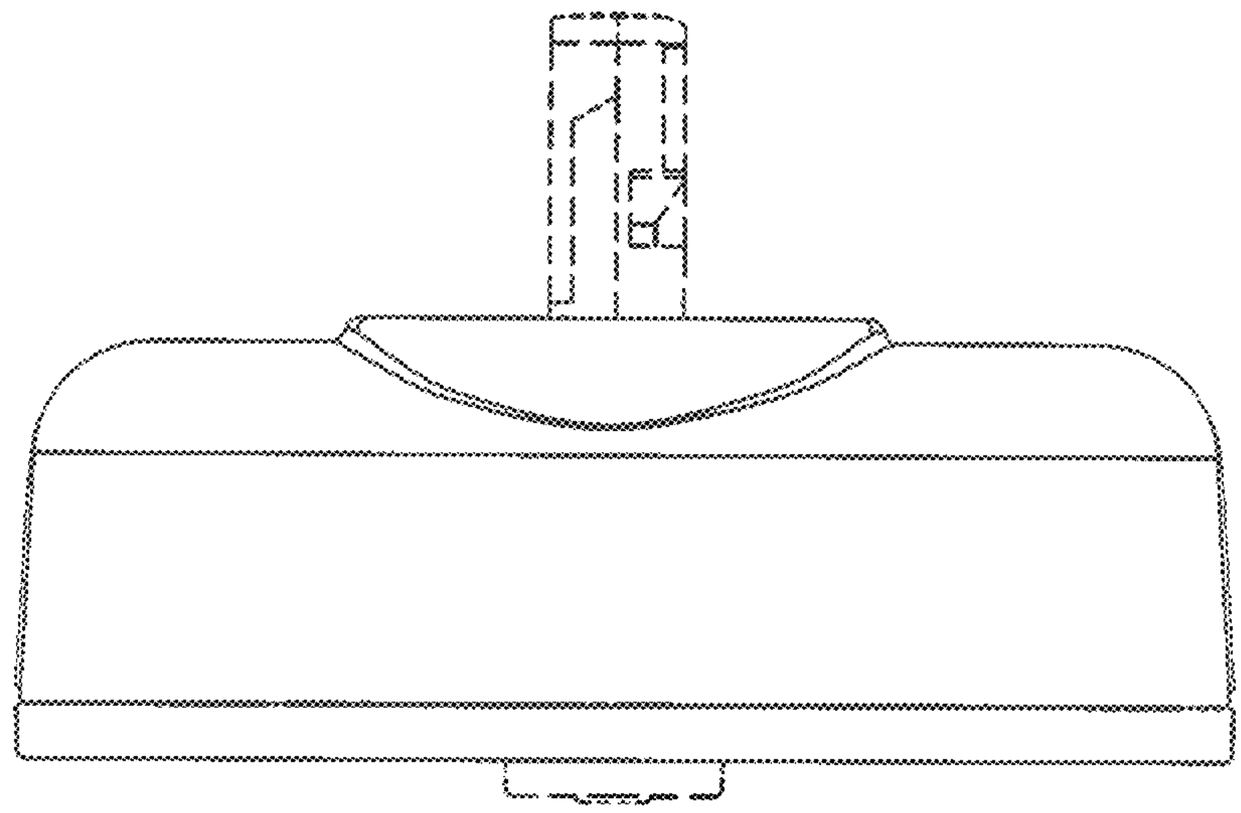

FIG.6

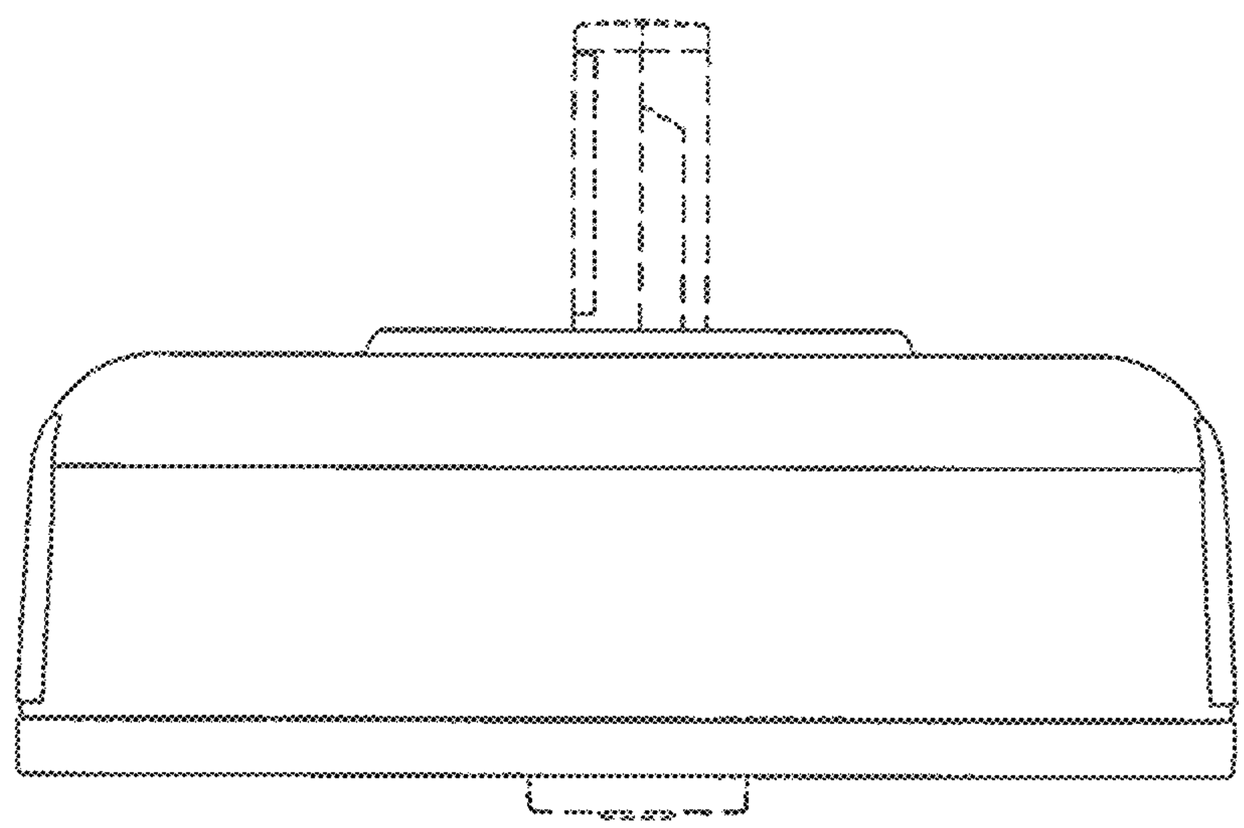

FIG.7

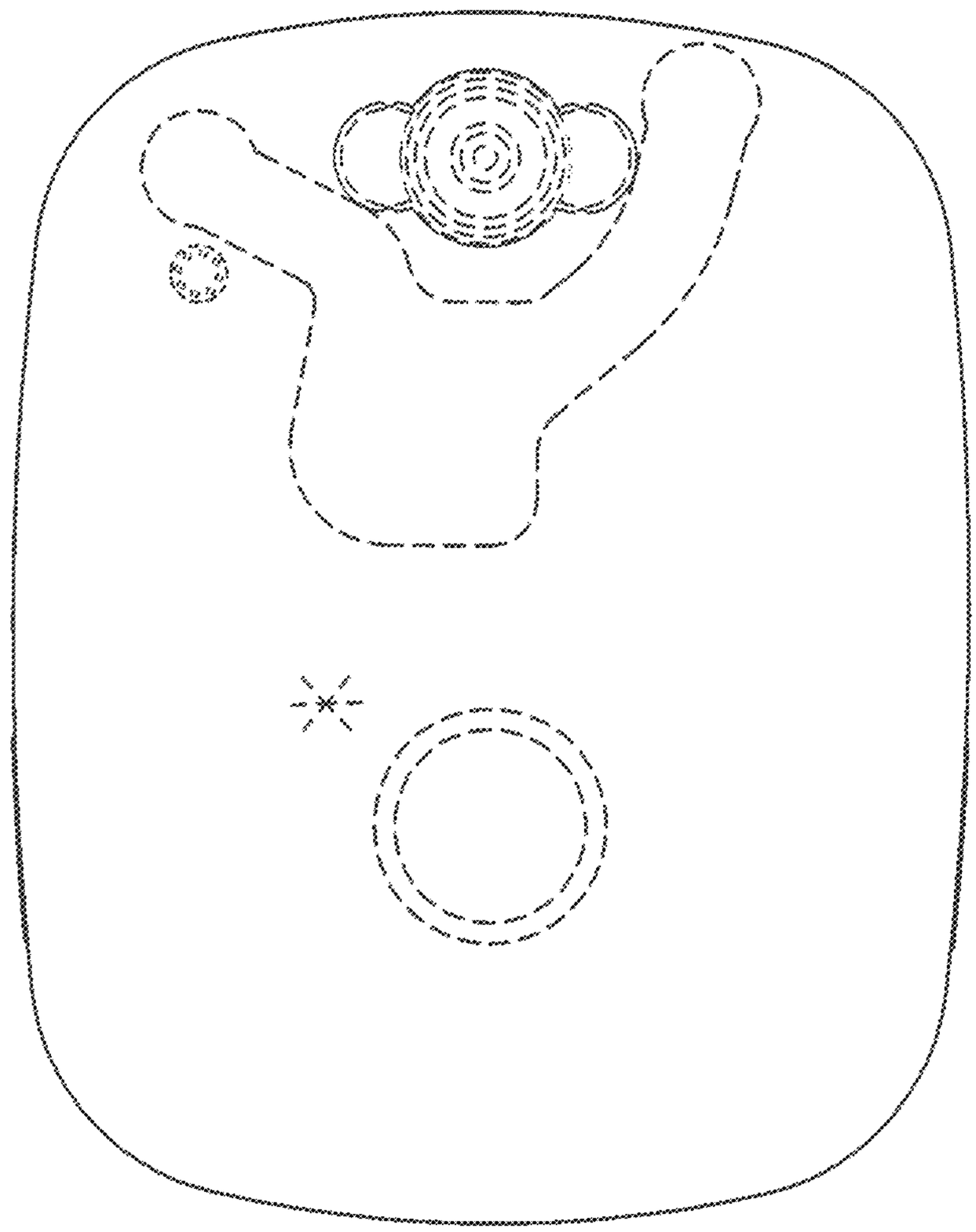

FIG.8