US00D876537S

(12) United States Design Patent

Lutnesky et al.

(10) Patent No.: US D876,537 S
(45) Date of Patent: ** Feb. 25, 2020

(54) **PRINTER CASSETTE**

(71) Applicant: **Hewlett-Packard Development Company, L.P.**, Houston, TX (US)

(72) Inventors: **Gary G. Lutnesky**, Corvallis, OR (US); **Dennis R. Esterberg**, Corvallis, OR (US); **Debora J. Thomas**, Corvallis, OR (US)

(73) Assignee: **Hewlett-Packard Development Company, L.P.**, Spring, TX (US)

(**) Term: **15 Years**

(21) Appl. No.: **29/641,546**

(22) Filed: **Mar. 22, 2018**

(51) **LOC (12) Cl.** **18-02**

(52) **U.S. Cl.**
USPC **D18/56**

(58) **Field of Classification Search**
USPC D14/299, 301–303, 307, 332, 386, D14/420–425, 432, 439, 441, 443, 447, D14/462–471, 474, 480.5, 483–484; D18/12, 14, 18–19, 36–41, 43–59, 54, D18/54.1, 55–59, 99
CPC .. G06K 15/12; G06K 15/14; B41J 3/00; B41J 3/28; B41J 11/00; B41J 11/58; B41J 15/12; B41J 15/042; G03G 15/00; G03G 15/0142; H04N 1/00129; H04N 1/00135; H04N 1/00204; H04N 1/00278
See application file for complete search history.

(56) **References Cited**

U.S. PATENT DOCUMENTS

6,390,593 B1 * 5/2002 DeRoos B41J 2/16508 347/29
6,550,890 B2 * 4/2003 Saijo B41J 2/16547 347/29
7,021,741 B2 * 4/2006 Aldrich B41J 2/16508 347/29
7,195,334 B2 * 3/2007 Nakamura B41J 2/16508 347/29
7,311,375 B2 * 12/2007 Suzuki B41J 2/16508 347/29
D726,252 S * 4/2015 Mizutani D18/56
9,061,512 B2 * 6/2015 Nozawa B41J 2/17503
D769,966 S * 10/2016 Mizutani D18/56
D829,815 S * 10/2018 Lutnesky D18/56
(Continued)

Primary Examiner — Cathron C Brooks
Assistant Examiner — Andrew T Nemeth
(74) *Attorney, Agent, or Firm* — Fabian VanCott

(57) **CLAIM**

The ornamental design for a printer cassette, as shown and described.

DESCRIPTION

FIG. **1** is a top, front, left-side perspective view of a printer cassette in accordance with our new design;
FIG. **2** is a front elevation view of the printer cassette shown in FIG. **1**;
FIG. **3** is a rear elevation view of the printer cassette shown in FIG. **1**;
FIG. **4** is a right-side elevation view of the printer cassette shown in FIG. **1**;
FIG. **5** is a left-side elevation view of the printer cassette shown in FIG. **1**;
FIG. **6** is a top plan view of the printer cassette shown in FIG. **1**; and,
FIG. **7** is a bottom plan view of the printer cassette shown in FIG. **1**.
The dash-dash broken lines immediately adjacent the shaded area and the dash-dot-dash broken lines on the tab represent the bounds of the claimed design while all other dash-dash broken lines illustrate portions of the article that form no part of the claimed design. The dash-dash broken lines and the dash-dot-dash broken lines form no part of the claimed design.

1 Claim, 6 Drawing Sheets

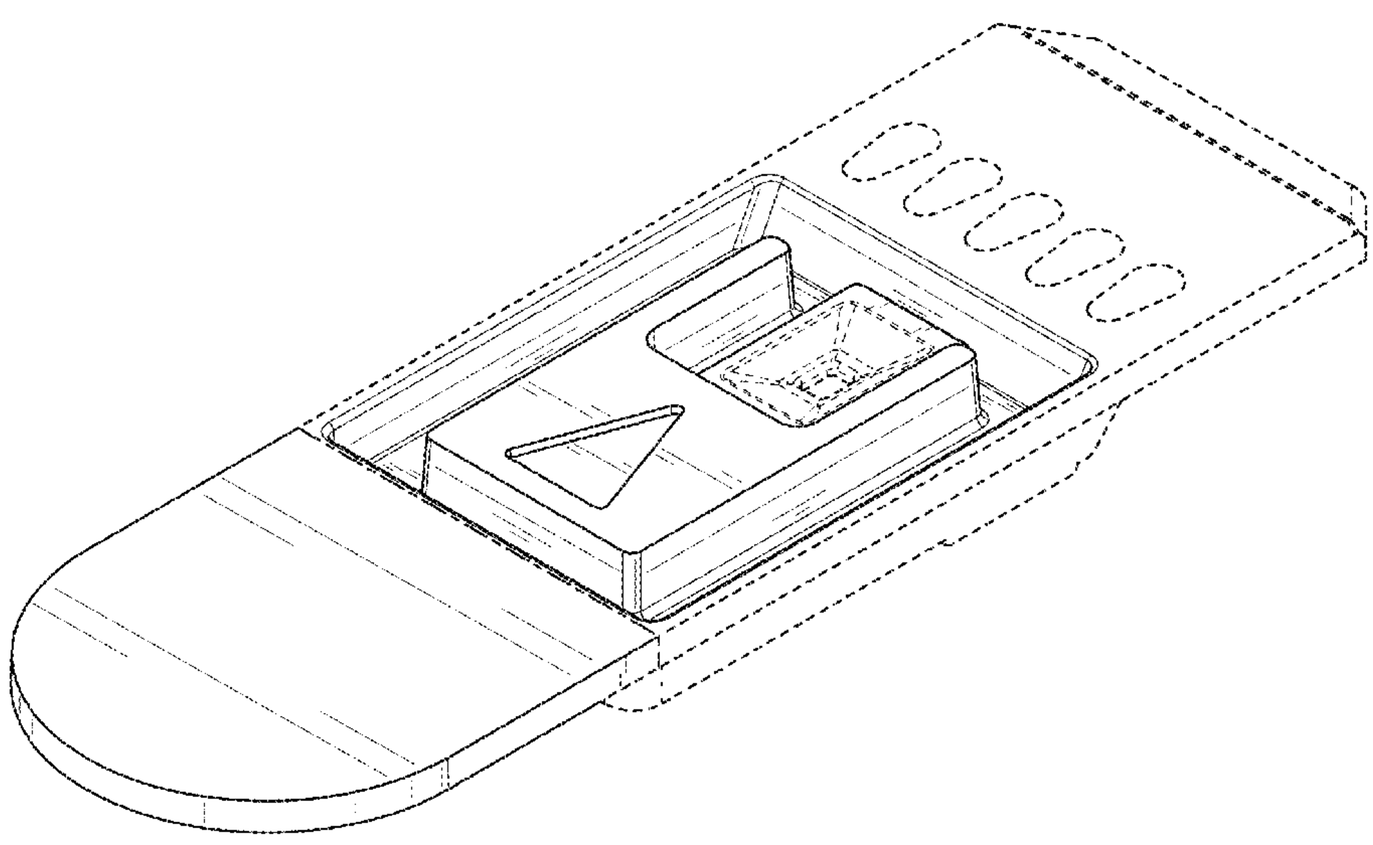

(56) **References Cited**

U.S. PATENT DOCUMENTS

2015/0336100 A1* 11/2015 Esterberg B41J 2/1752
422/559
2018/0284147 A1* 10/2018 Lutnesky G01N 35/1002

* cited by examiner

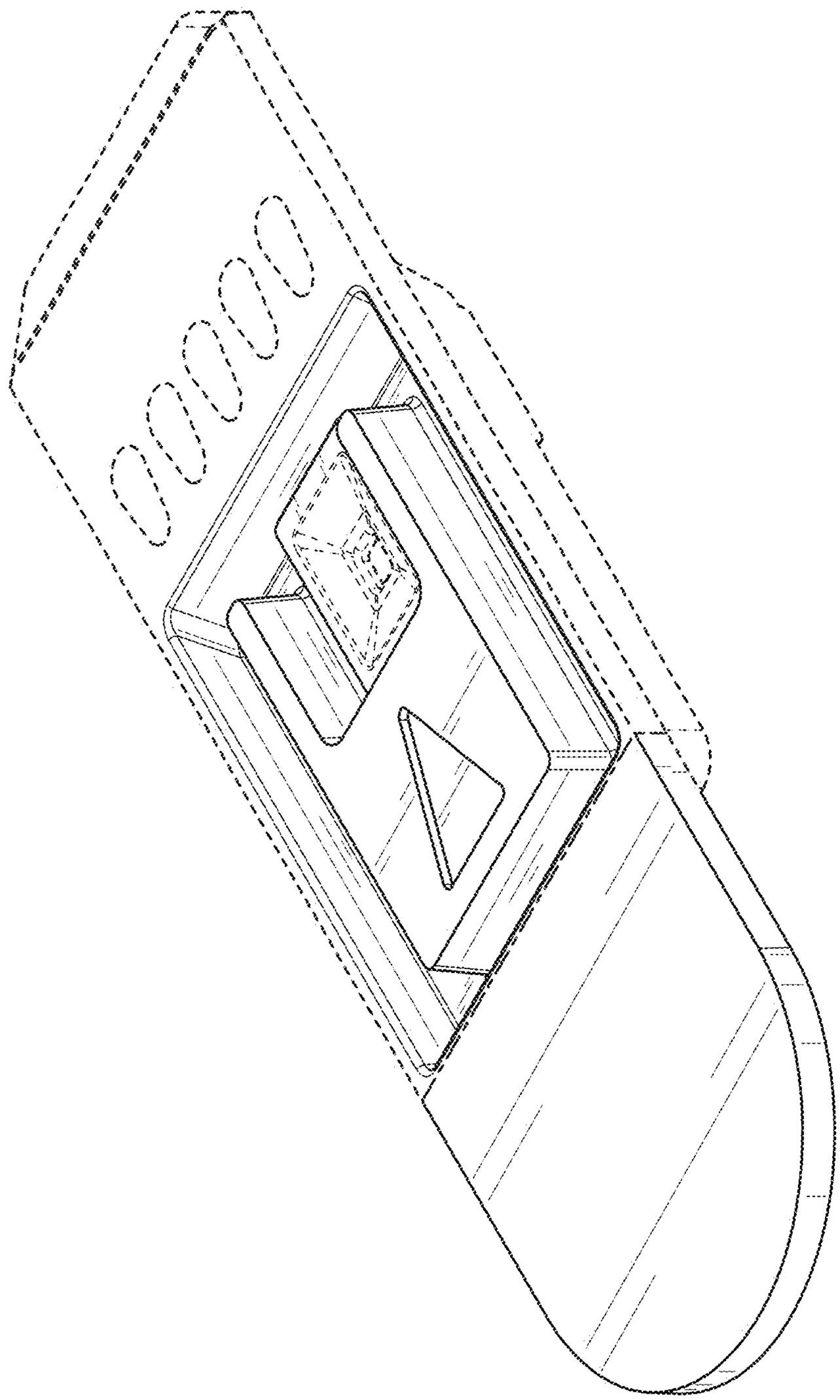

FIG. 1

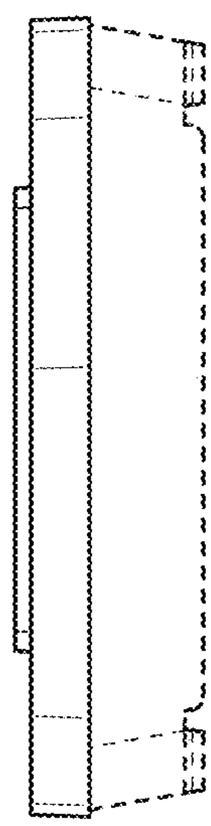

FIG. 2

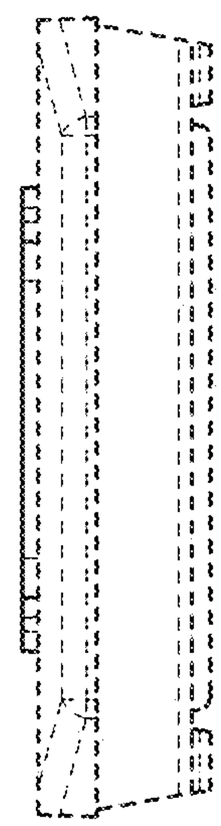

FIG. 3

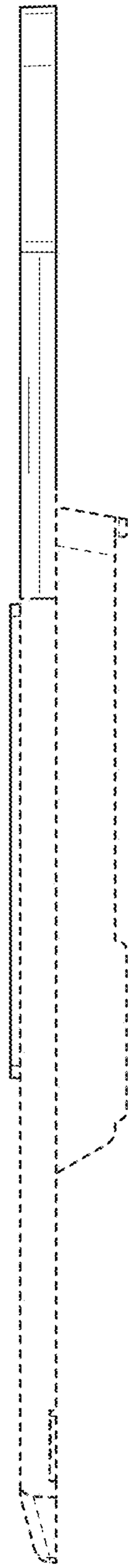

FIG. 4

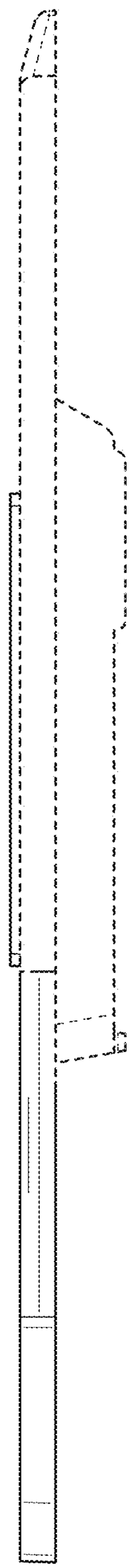

FIG. 5

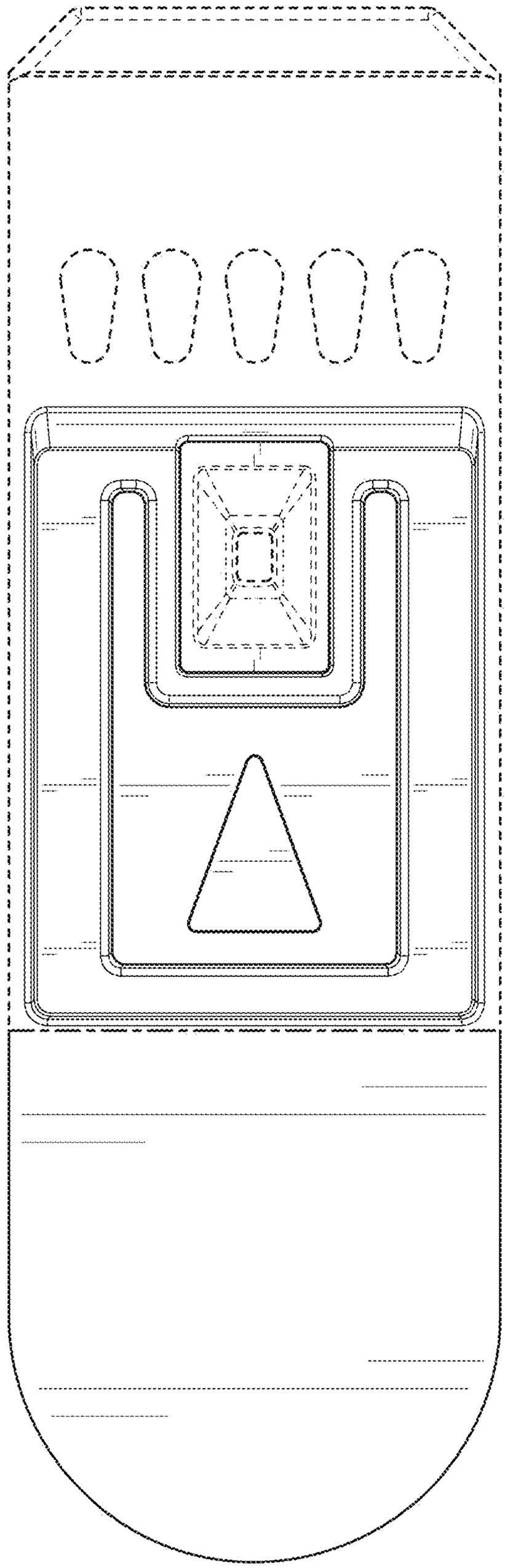

FIG. 6

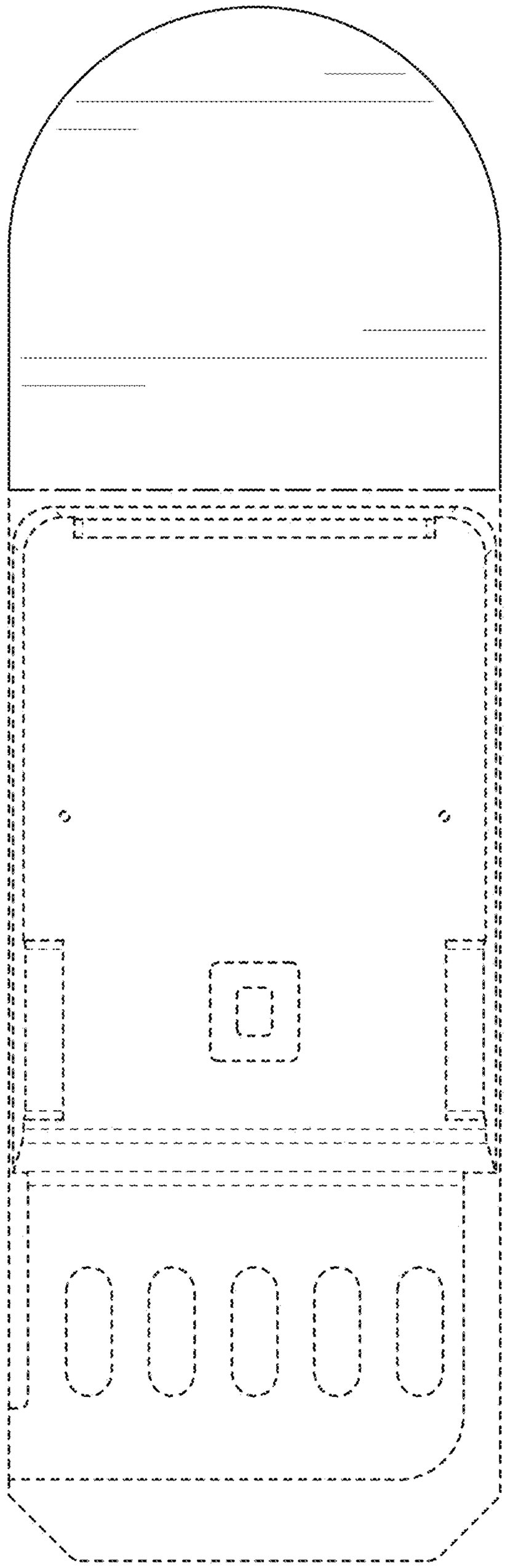

FIG. 7