US00D876178S

# (12) United States Design Patent

Pentelovitch et al.

(10) Patent No.: US D876,178 S
(45) Date of Patent: ** Feb. 25, 2020

(54) **CONTAINER**

(71) Applicant: **Helen of Troy Limited**, Belleville, St. Michael (BB)

(72) Inventors: **Noah Ziman Pentelovitch**, New York, NY (US); **Conor Patrick McNamara**, Montclair, NJ (US); **Makiko Kida**, Chiba (JP); **Tamotsu Matsumoto**, Chiba (JP); **Nobuyuki Ogasawara**, Chiba (JP); **Yoshinori Nagata**, Chiba (JP)

(73) Assignee: **Helen of Troy Limited**, St. Michael (BB)

(**) Term: **15 Years**

(21) Appl. No.: **29/631,357**

(22) Filed: **Dec. 29, 2017**

(51) **LOC (12) Cl.** ..... **07-07**

(52) **U.S. Cl.**
USPC ..... **D7/629**

(58) **Field of Classification Search**
USPC ..... D7/629, 602, 538–542, 601, 612–615; D9/424, 428–432, 761, 414, 642, 721, 73
(Continued)

(56) **References Cited**

U.S. PATENT DOCUMENTS

D150,045 S * 6/1948 Zaikaner ..... D7/629
D159,811 S * 8/1950 Hill ..... D7/629
(Continued)

OTHER PUBLICATIONS

Amazon.com: OXO® Good Grips POP Container, [online], date first listed Oct. 2, 2001, retrieved on Apr. 8, 2019. Retrieved from, <URL: https://www.amazon.com/dp/B000UHYB9E/ref=psdc_3744021_t1_B0051T93TE>, all pages.*
(Continued)

*Primary Examiner* — Terry A Wallace
(74) *Attorney, Agent, or Firm* — Rankin, Hill & Clark LLP

(57) **CLAIM**

The ornamental design for a container, as shown and described.

**DESCRIPTION**

FIG. **1** is an upper perspective view of a container with a button in an extended position according to a first embodiment;
FIG. **2** is another upper perspective view thereof with the button in a depressed position;
FIG. **3** is a lower perspective view thereof;
FIG. **4** is a side elevation view thereof with the button in the extended position, and each side being identical;
FIG. **5** is a side elevation view thereof with the button in the depressed position, and each side being identical;
FIG. **6** is a top plan view thereof;
FIG. **7** is a bottom plan view thereof;
FIG. **8** is an upper perspective view of a container with the button in an extended position according to a second embodiment;
FIG. **9** is another upper perspective view thereof with the button in a depressed position;
FIG. **10** is a lower perspective view thereof;
FIG. **11** is a side elevation view thereof with the button in the extended position, and each side being identical;
FIG. **12** is a side elevation view thereof with the button in the depressed position, and each side being identical;
FIG. **13** is a top plan view thereof;
FIG. **14** is a bottom plan view thereof;
FIG. **15** is an upper perspective view of a container with a button in an extended position according to a third embodiment;
FIG. **16** is another upper perspective view thereof with the button in a depressed position;
FIG. **17** is a lower perspective view thereof;
FIG. **18** is a side elevation view thereof with the button in the extended position, and each side being identical;
(Continued)

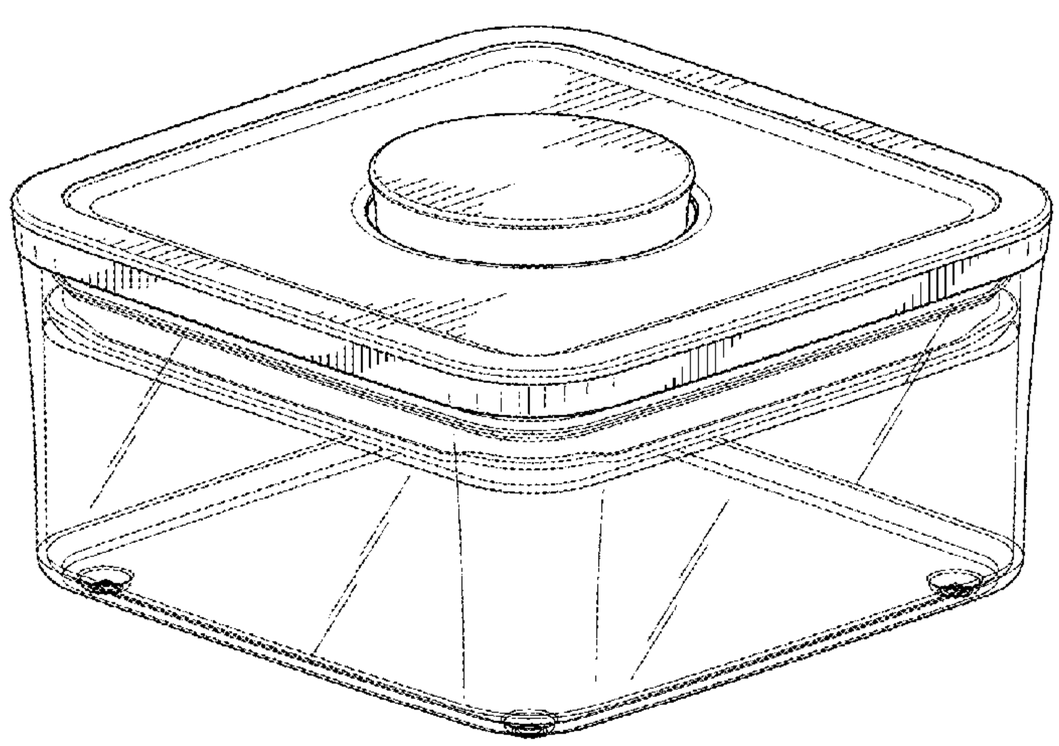

FIG. **19** is a side elevation view thereof with the button in the depressed position, and each side being identical;
FIG. **20** is a top plan view thereof;
FIG. **21** is a bottom plan view thereof;
FIG. **22** is an upper perspective view of a container with a button in an extended position according to a fourth embodiment;
FIG. **23** is another upper perspective view thereof with the button in a depressed position;
FIG. **24** is a lower perspective view thereof;
FIG. **25** is a side elevation view thereof with the button in the extended position, and each side being identical;
FIG. **26** is a side elevation view thereof with the button in the depressed position, and each side being identical;
FIG. **27** is a top plan view thereof;
FIG. **28** is a bottom plan view thereof;
FIG. **29** is an upper perspective view of a container with a button in an extended position according to a fifth embodiment;
FIG. **30** is another upper perspective view thereof with the button in a depressed position;
FIG. **31** is a lower perspective view thereof;
FIG. **32** is a side elevation view thereof with the button in the extended position, and each side being identical;
FIG. **33** is a side elevation view thereof with the button in the depressed position, and each side being identical;
FIG. **34** is a top plan view thereof; and,
FIG. **35** is a bottom plan view thereof.
The container is shown broken along the height direction in FIGS. **29-35** to indicate indeterminate height, with the understanding the "indeterminate" height portion of the container not shown forms no part of the claimed design. Patentability is based only on those portions of the article that are shown in solid lines.

**1 Claim, 35 Drawing Sheets**

(58) **Field of Classification Search**
CPC ..... B65D 2543/00296; B65D 43/02; B65D 2543/00101; B65D 2543/00194; B65D 43/16; B65D 45/00; B65D 1/22; B65D 2203/00; B65D 2543/00592; A45C 11/20
See application file for complete search history.

(56) **References Cited**

U.S. PATENT DOCUMENTS

| | | | | | |
|---|---|---|---|---|---|
| D162,579 | S | * | 3/1951 | Roop | D7/615 |
| 2,575,770 | A | * | 11/1951 | Roop | A47J 47/02 206/499 |
| D176,766 | S | * | 1/1956 | Hill | D7/615 |
| 2,768,667 | A | * | 10/1956 | Hill | B65D 1/26 206/518 |
| D201,455 | S | * | 6/1965 | Lindstrom | D7/540 |
| D274,396 | S | * | 6/1984 | Kikuchi | D7/605 |
| 4,572,374 | A | * | 2/1986 | Sirotkin | B65D 21/064 206/505 |
| 4,585,138 | A | * | 4/1986 | Jonkers | B65D 43/0212 220/614 |
| D326,391 | S | * | 5/1992 | Verchere | D34/7 |
| D362,180 | S | * | 9/1995 | Haines | D9/529 |
| D396,172 | S | * | 7/1998 | Nask | D7/615 |
| D403,582 | S | * | 1/1999 | Nask | D9/435 |
| 5,896,993 | A | * | 4/1999 | Nask | B65D 21/0219 206/508 |
| D447,669 | S | * | 9/2001 | Tzeng Wu | D7/615 |
| D518,958 | S | * | 4/2006 | Yourist | D3/302 |
| D521,811 | S | * | 5/2006 | Yourist | D7/615 |
| D524,119 | S | * | 7/2006 | Kim | D7/615 |
| D527,845 | S | * | 9/2006 | Ng | D28/73 |
| D531,043 | S | * | 10/2006 | Houtart | D9/560 |
| D540,669 | S | * | 4/2007 | George | D7/392.1 |
| D572,086 | S | | 7/2008 | Matsumoto et al. | |
| D592,966 | S | * | 5/2009 | Nissen | D9/560 |
| D610,412 | S | * | 2/2010 | Matsumoto | D7/629 |
| D619,424 | S | * | 7/2010 | Yang | D7/615 |
| D659,530 | S | * | 5/2012 | Akana | D9/424 |
| D669,777 | S | * | 10/2012 | Brown | D9/424 |
| D674,248 | S | * | 1/2013 | Lindsay | D7/629 |
| D696,558 | S | * | 12/2013 | Song | D7/629 |
| D696,559 | S | * | 12/2013 | Song | D7/629 |
| D702,547 | S | * | 4/2014 | Akana | D14/496 |
| 8,807,370 | B2 | * | 8/2014 | Lee | B65D 45/327 220/235 |
| D759,434 | S | * | 6/2016 | Duvigneau | D7/615 |
| 9,359,114 | B2 | * | 6/2016 | Wong | B65D 43/26 |
| D765,508 | S | * | 9/2016 | Wu | D9/439 |
| D773,931 | S | * | 12/2016 | Liu | D9/449 |
| D790,335 | S | * | 6/2017 | Honings | D9/424 |
| 9,731,874 | B2 | * | 8/2017 | Luo | A47J 47/02 |
| D817,116 | S | * | 5/2018 | Evans | D7/629 |
| D817,701 | S | * | 5/2018 | Ho | D7/391 |
| D821,869 | S | * | 7/2018 | Cheng | D9/424 |
| D828,754 | S | * | 9/2018 | Liu | D9/439 |
| D834,377 | S | * | 11/2018 | Zoske | D7/629 |
| D839,664 | S | * | 2/2019 | Pentelovitch | D7/391 |
| 2007/0241107 | A1 | * | 10/2007 | Matsumoto | B65D 39/12 220/238 |
| 2013/0256256 | A1 | * | 10/2013 | Krippendorf | B65D 55/12 215/200 |
| 2013/0306497 | A1 | * | 11/2013 | Llewellyn | B44D 3/12 206/1.7 |
| 2016/0167863 | A1 | * | 6/2016 | Han | B65D 53/02 220/256.1 |
| 2016/0257458 | A1 | * | 9/2016 | Pentelovitch | B65D 45/32 |
| 2016/0368671 | A1 | * | 12/2016 | Pentelovitch | B65D 45/327 |
| 2017/0247151 | A1 | * | 8/2017 | Chiou | B65D 43/26 |
| 2018/0016065 | A1 | * | 1/2018 | Ho | B65D 45/32 |

OTHER PUBLICATIONS

Bed Bath & Beyond—OXO® Good Grips, [online], reviewed on Apr. 8, 2015, retrieved on Apr. 8, 2019. Retrieved from, <URL: https://www.bedbathandbeyond.com/store/product/oxo-good-grips-reg-5-piece-food-storage-pop-container-set/3262793?skuId=16108472&&mrkgcl=609&mrkgadid=3306238966&enginename=google&mcid . . . >, all pages.*
OXO® POP Canisters—YouTube, [online], posted on Apr. 28, 2015, retrieved on Apr. 8, 2019. Retrieved from, <URL: https://www.youtube.com/watch?v=DTujNDIRMZM>, all pages.*
Amazon.com: OXO® SteeL POP Container, [online], first listed May 20, 2011, retrieved on Apr. 8, 2019. Retrieved from, <URL: https://www.amazon.com/OXO-SteeL-POP-Container-Airtight/dp/B0051T93TE/ref=cm_cr_arp_d_product_top?ie=UTF8>, all pages.*
https://www.oxo.com/products/storage-organization/food/pop-container-big-square-4-0-qt-3-8-l (website published prior to Dec. 29, 2016).
https://www.target.com/s/oxo+softworks+pop+containers (website published prior to Dec. 29, 2016 ).
Airtight POP Container Square 0.9 Qt for Brown Sugar | OXO (https://www.oxo.com/categories/cooking-and-baking/food-containers/pop-containers/pop-container-sm-square-0-9-qt-0-9-l.html) publicly available prior to Dec. 29, 2017.

* cited by examiner

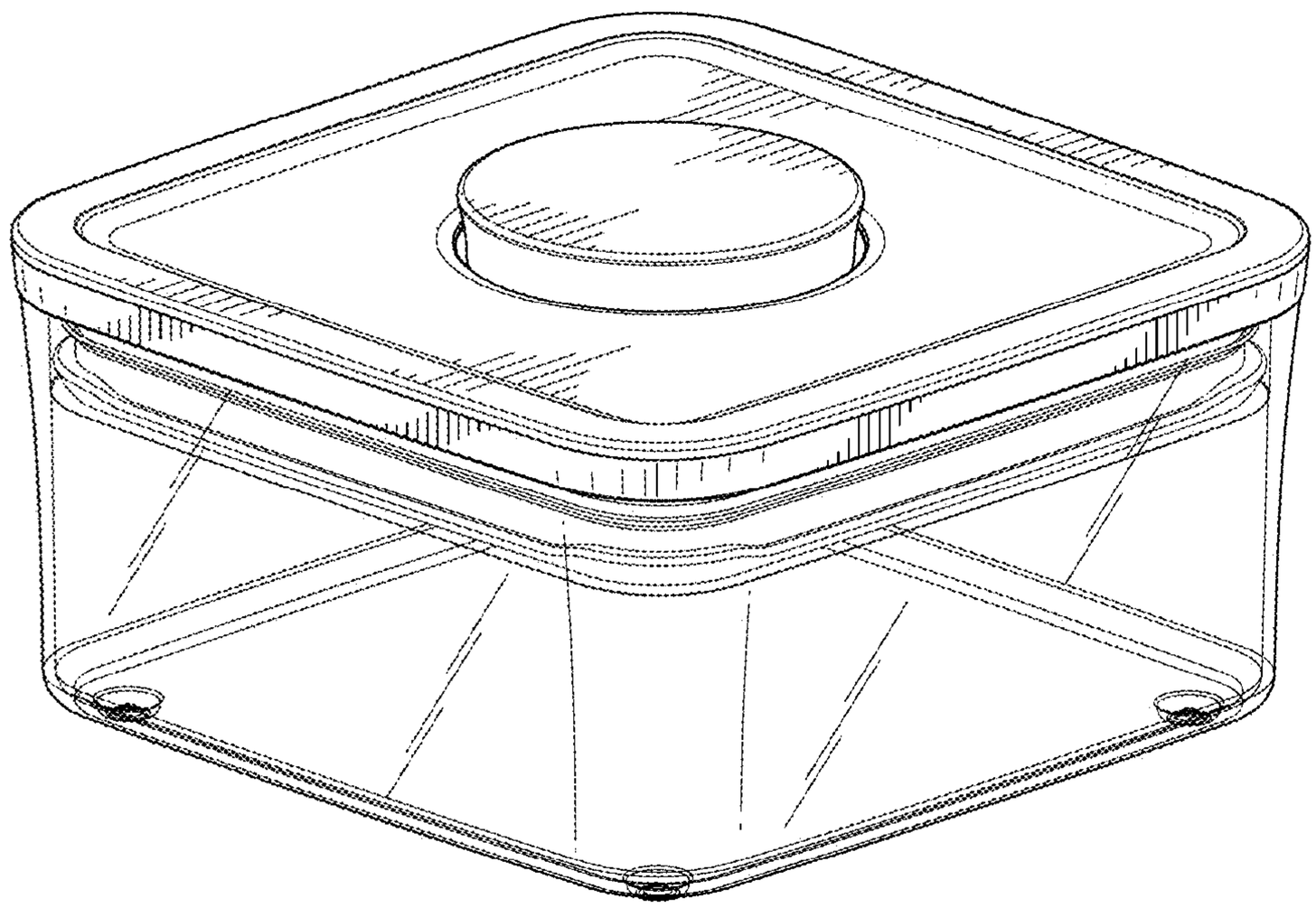

FIG. 1

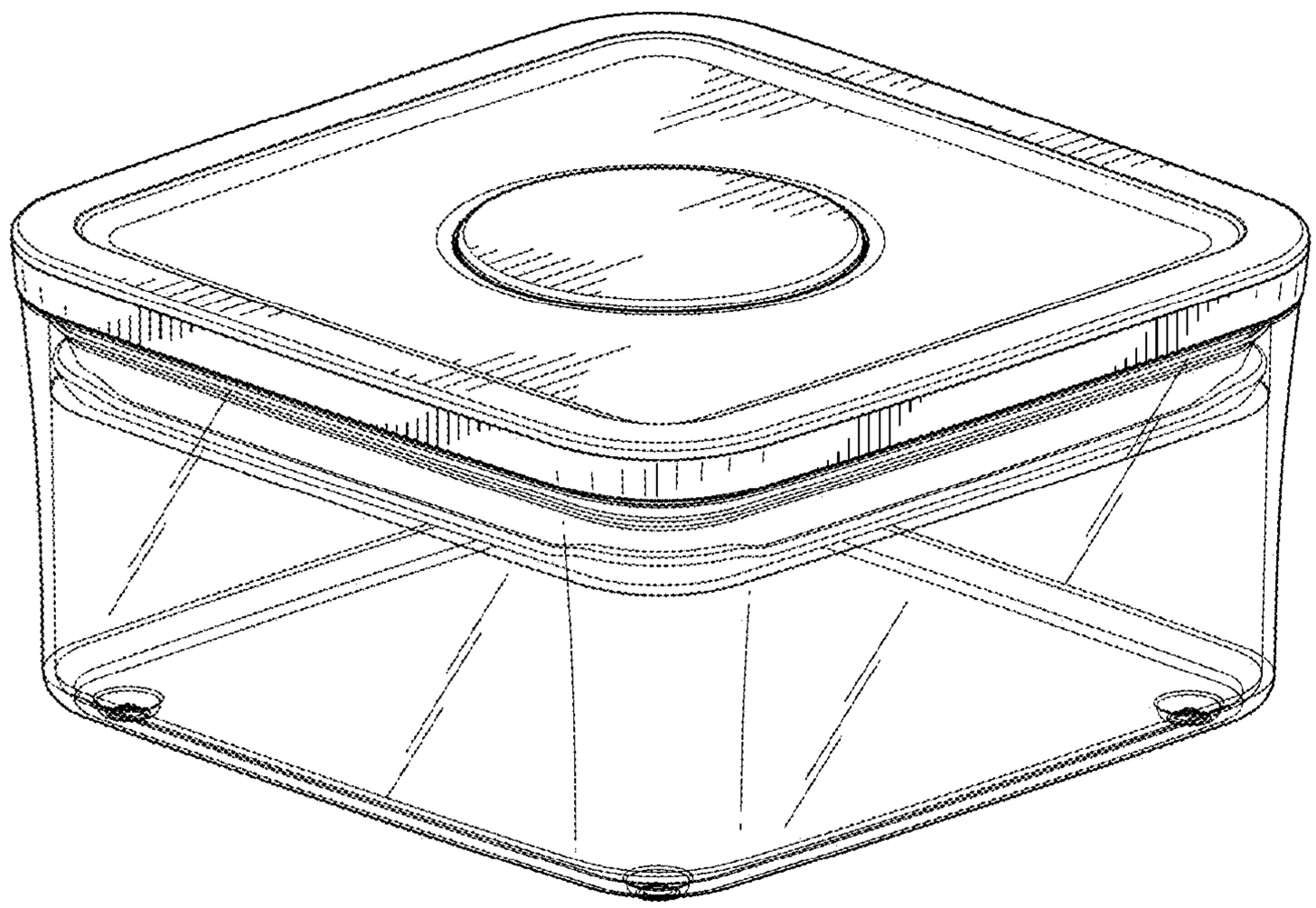

FIG.2

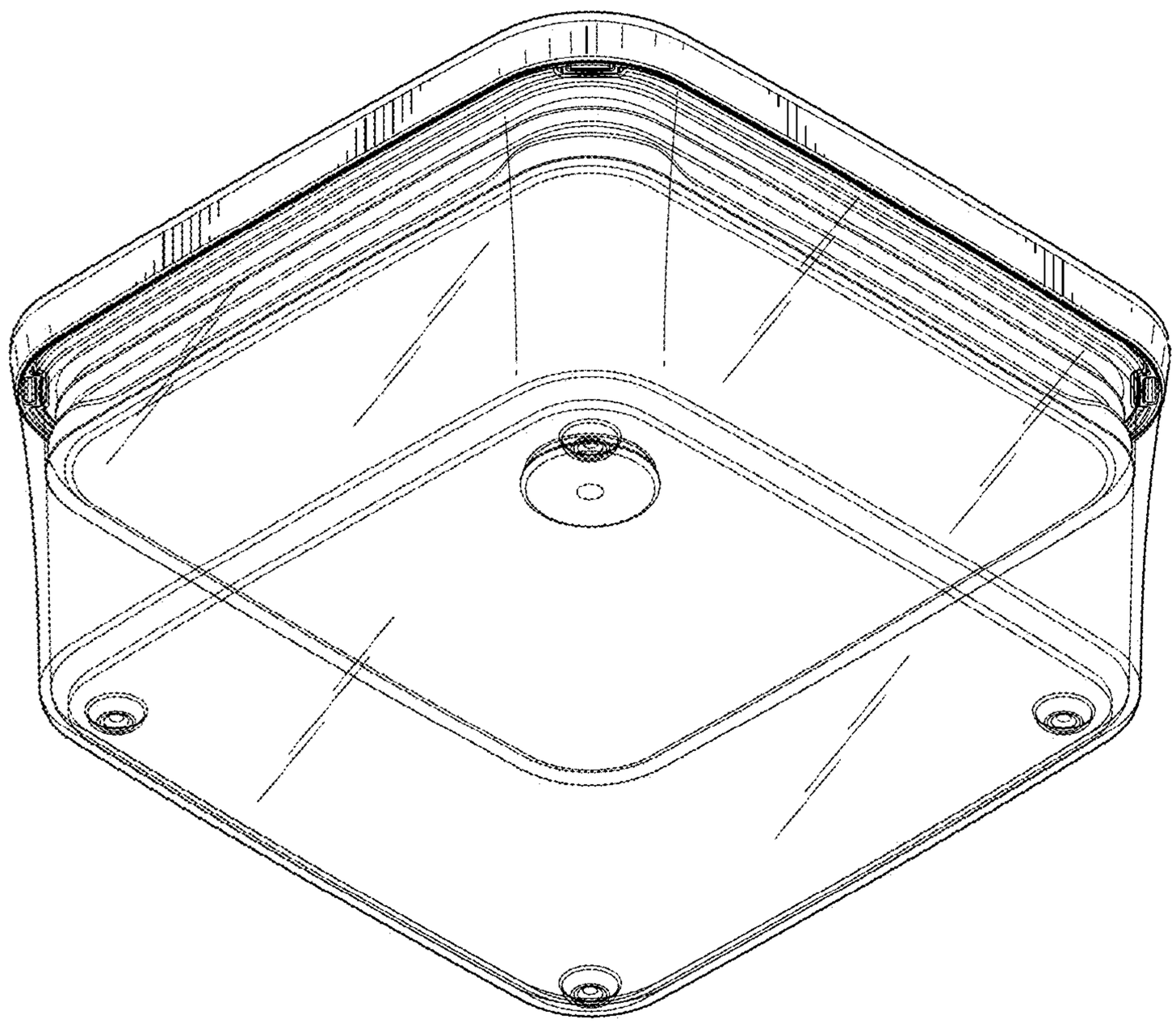

FIG.3

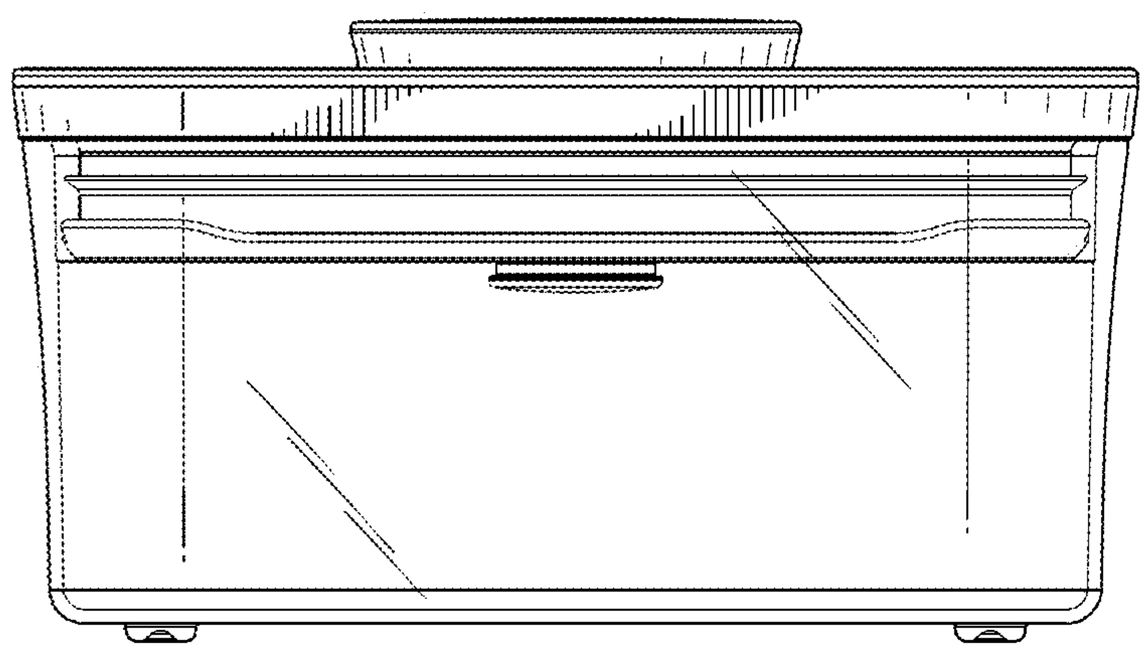

FIG.4

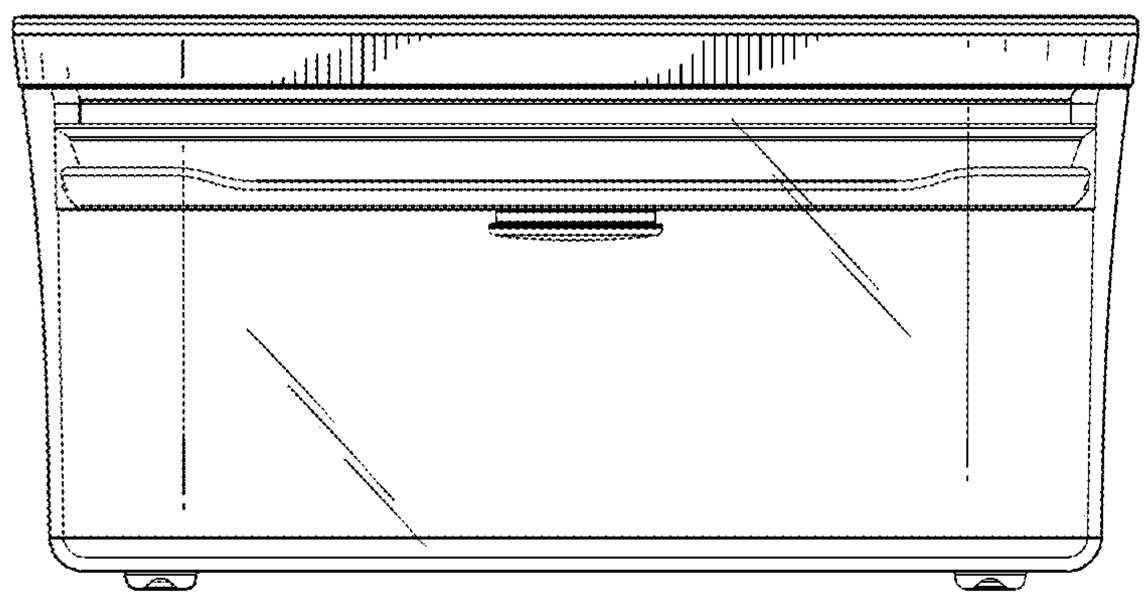

FIG.5

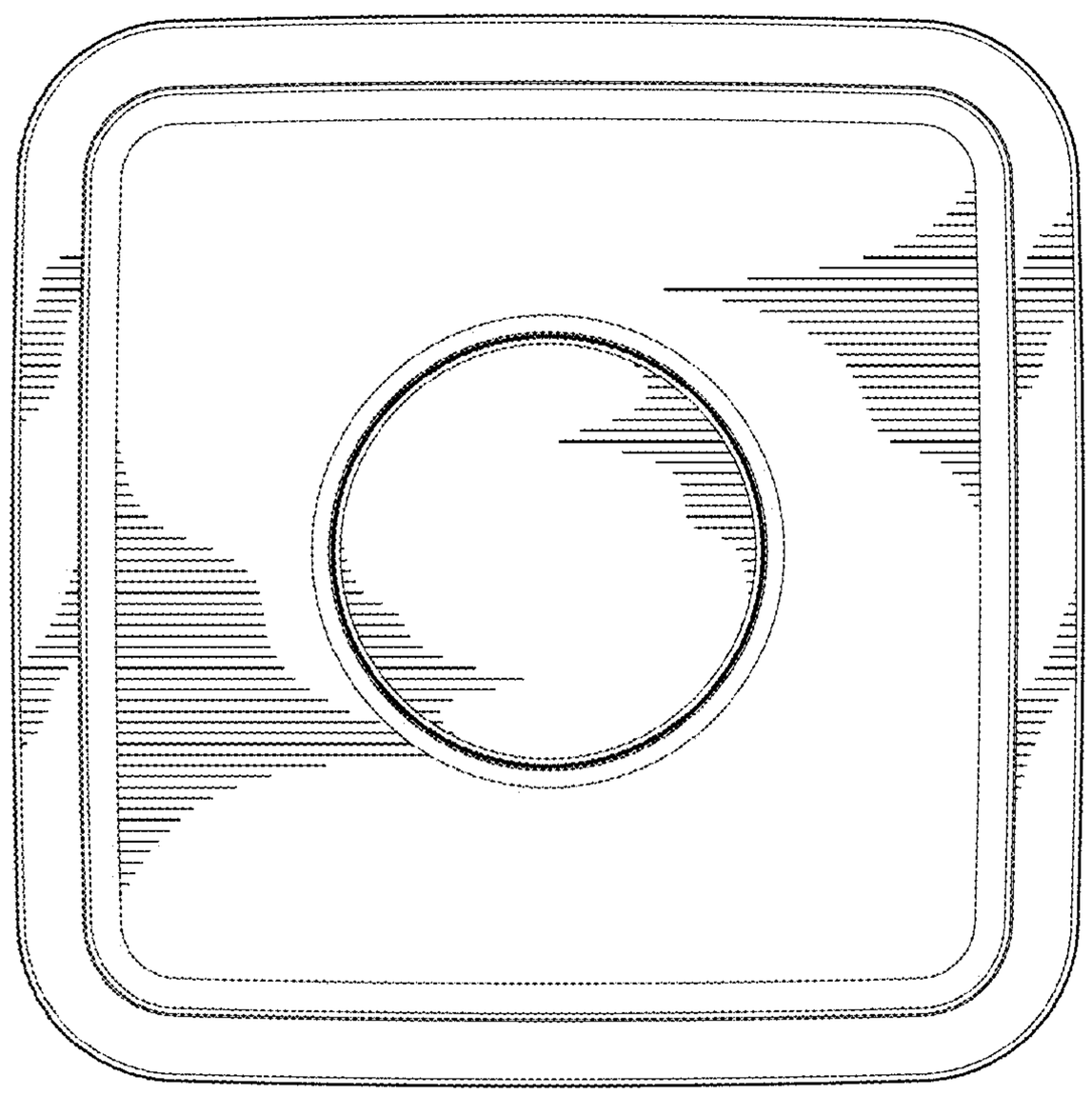

FIG.6

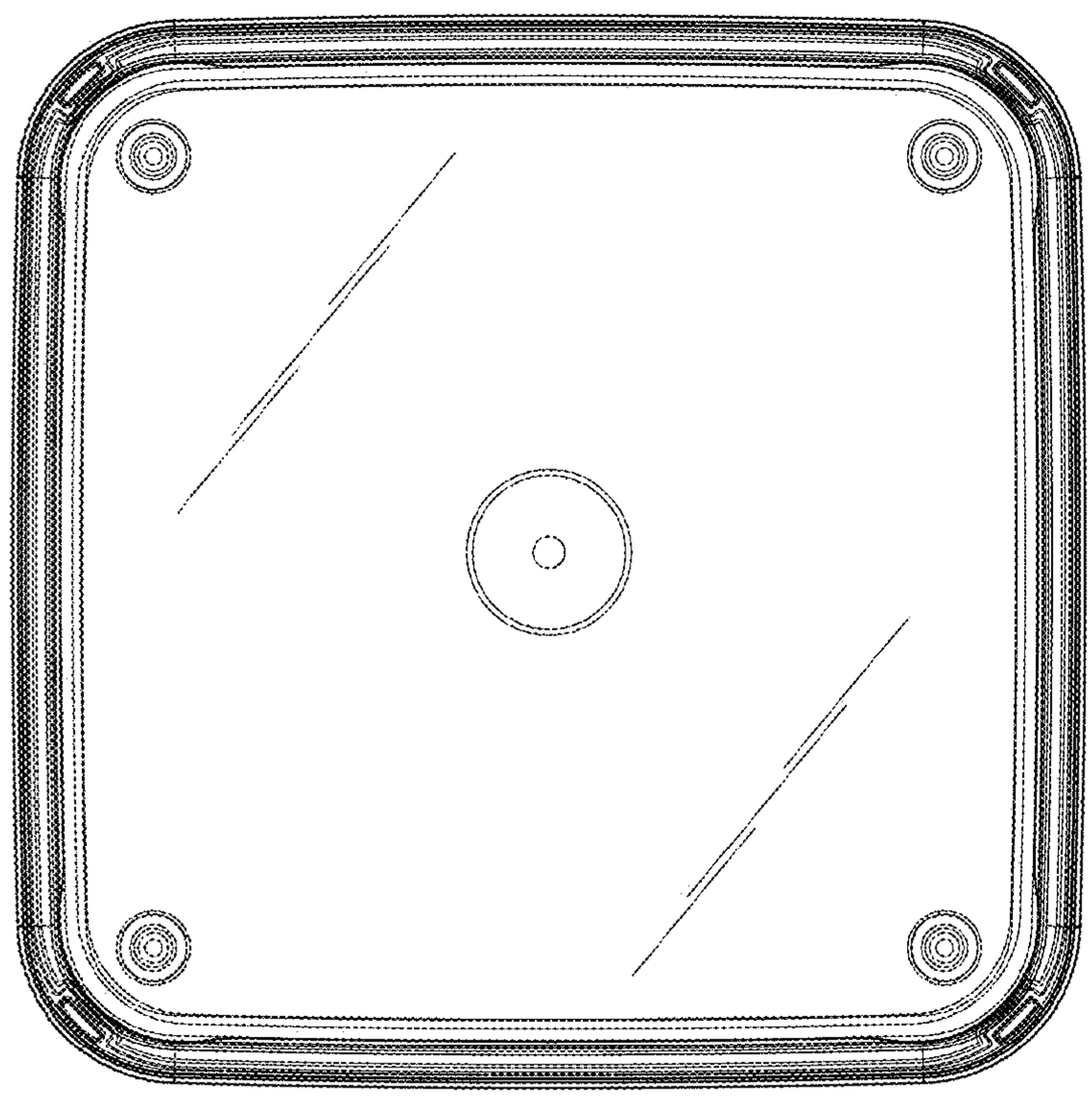

FIG. 7

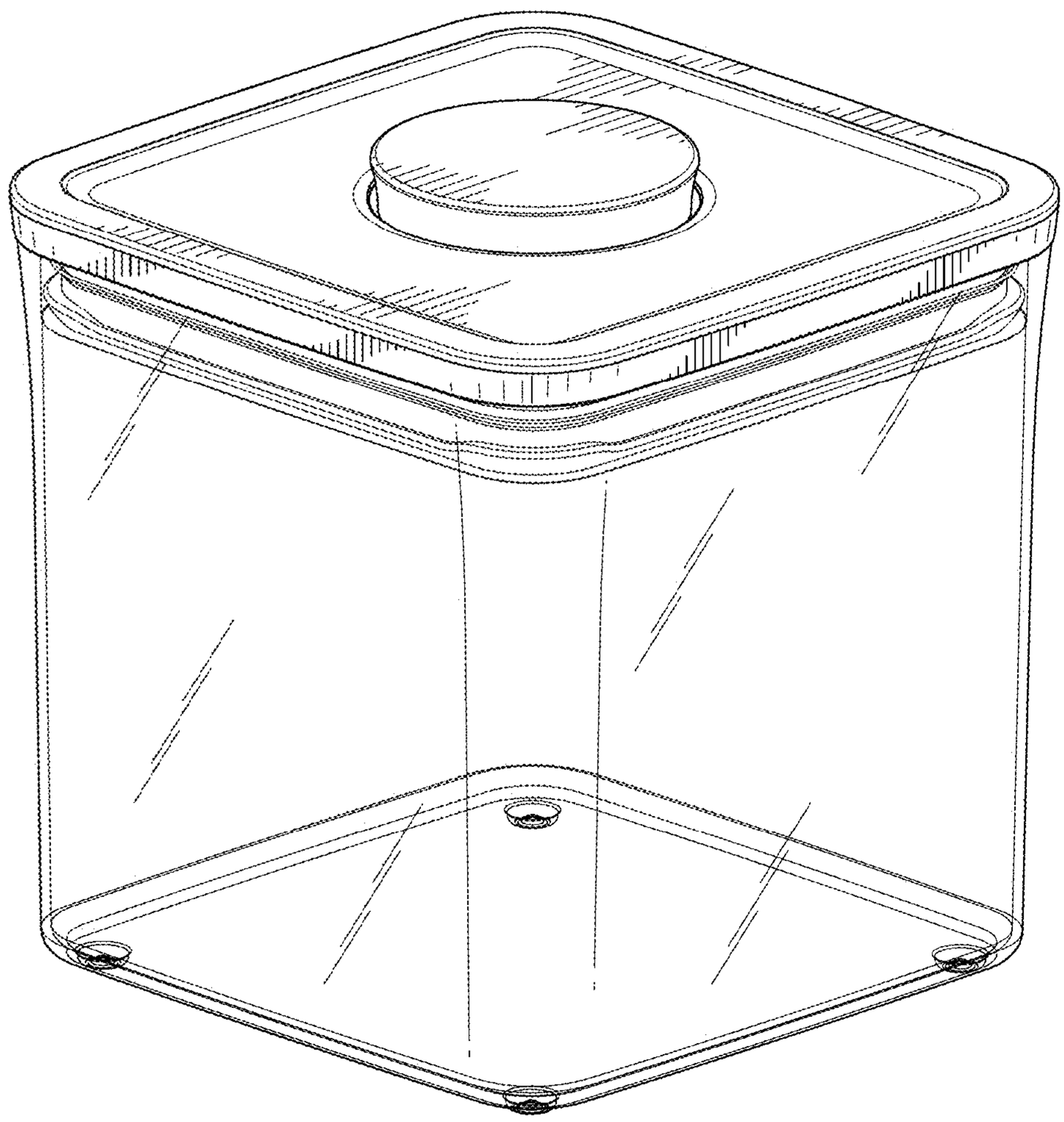

FIG.8

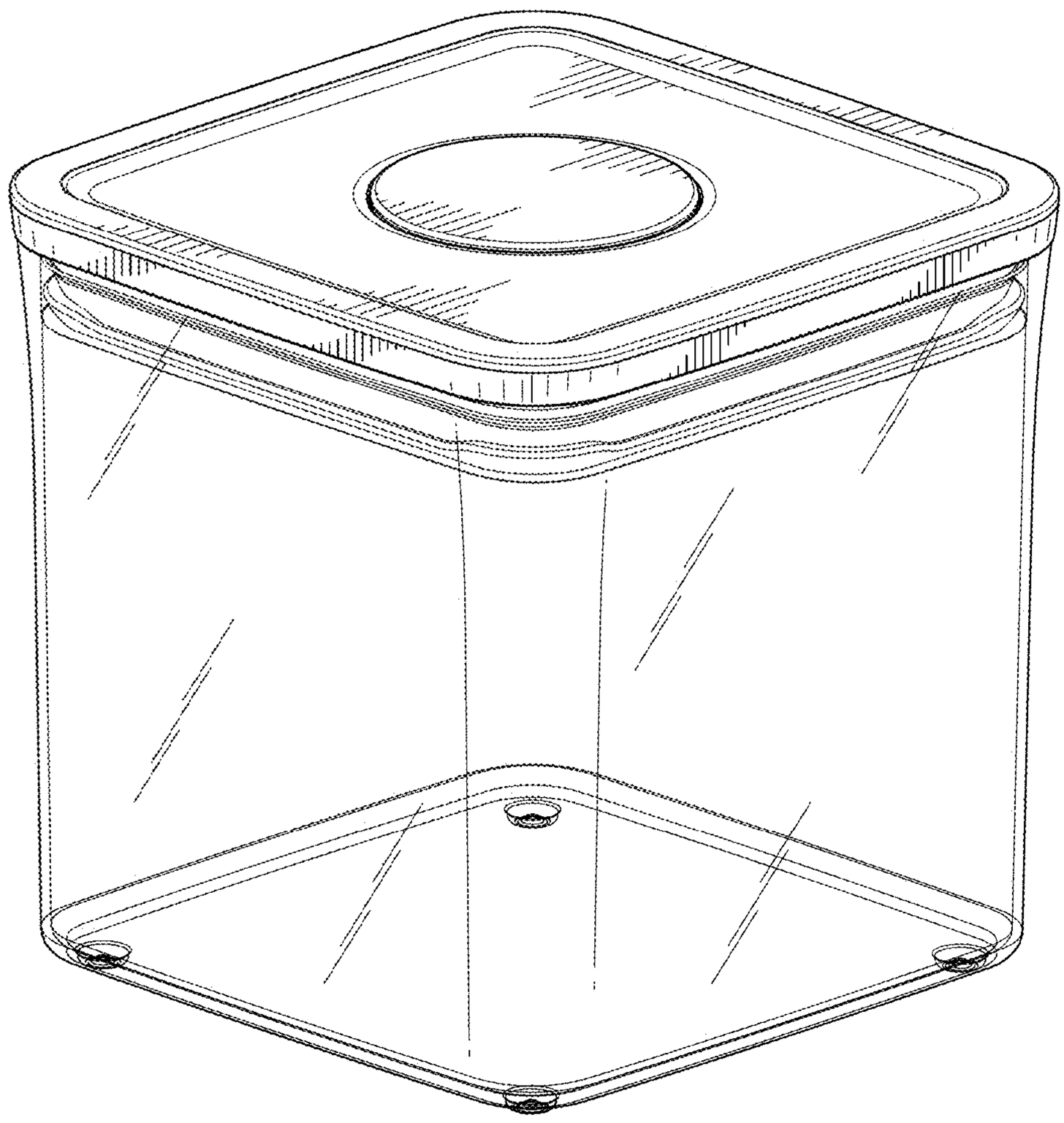

FIG.9

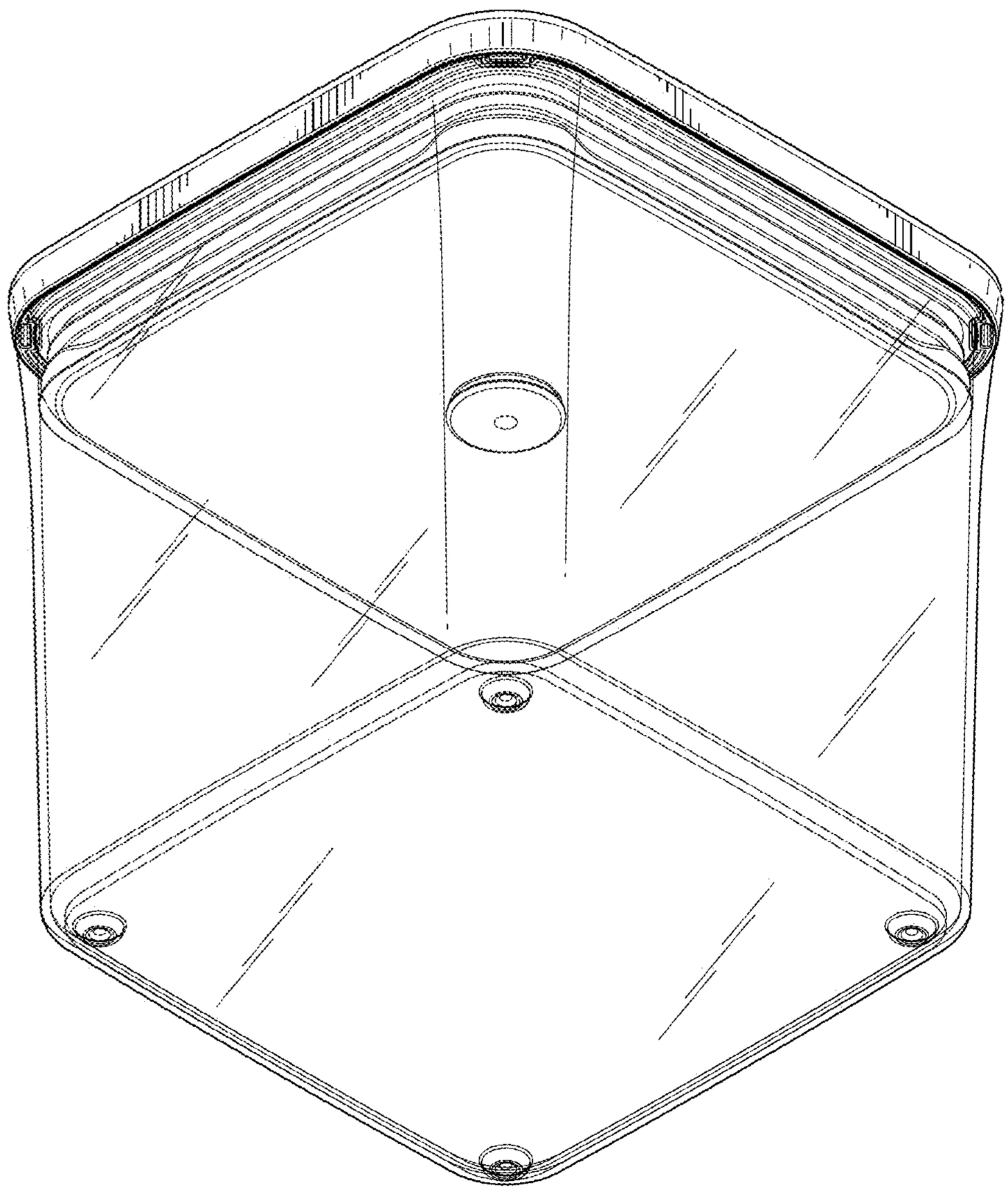

FIG.10

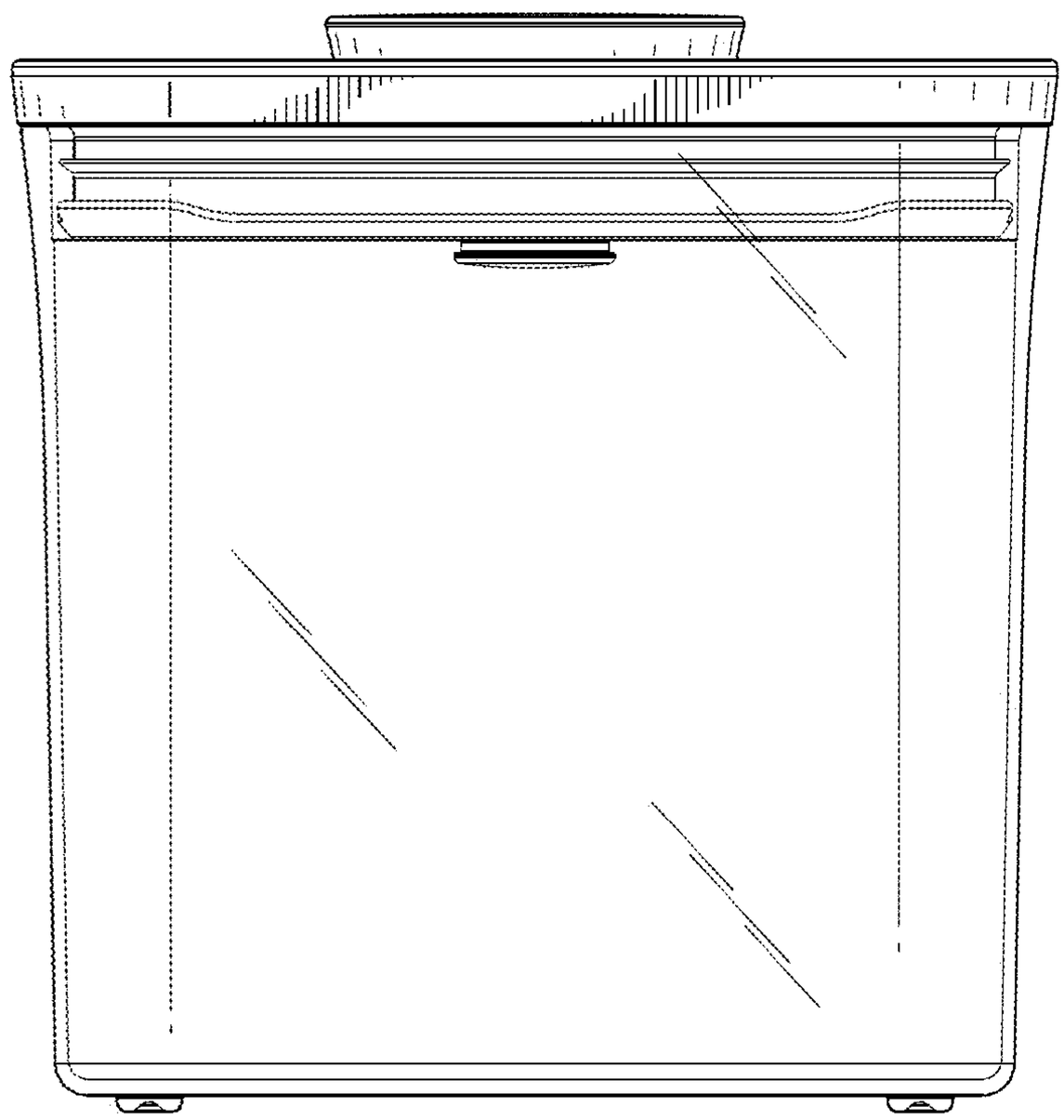

FIG. 11

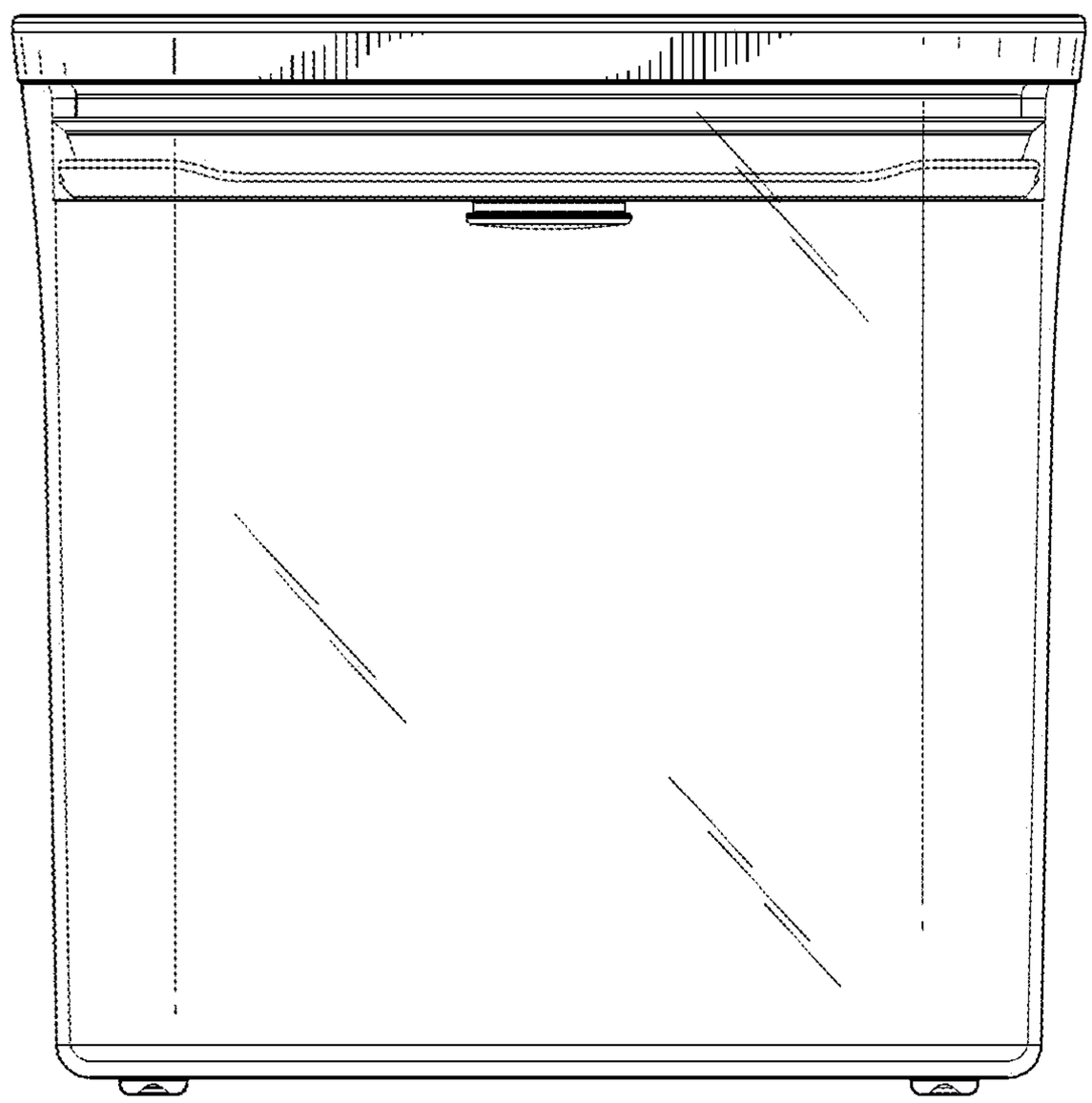

FIG. 12

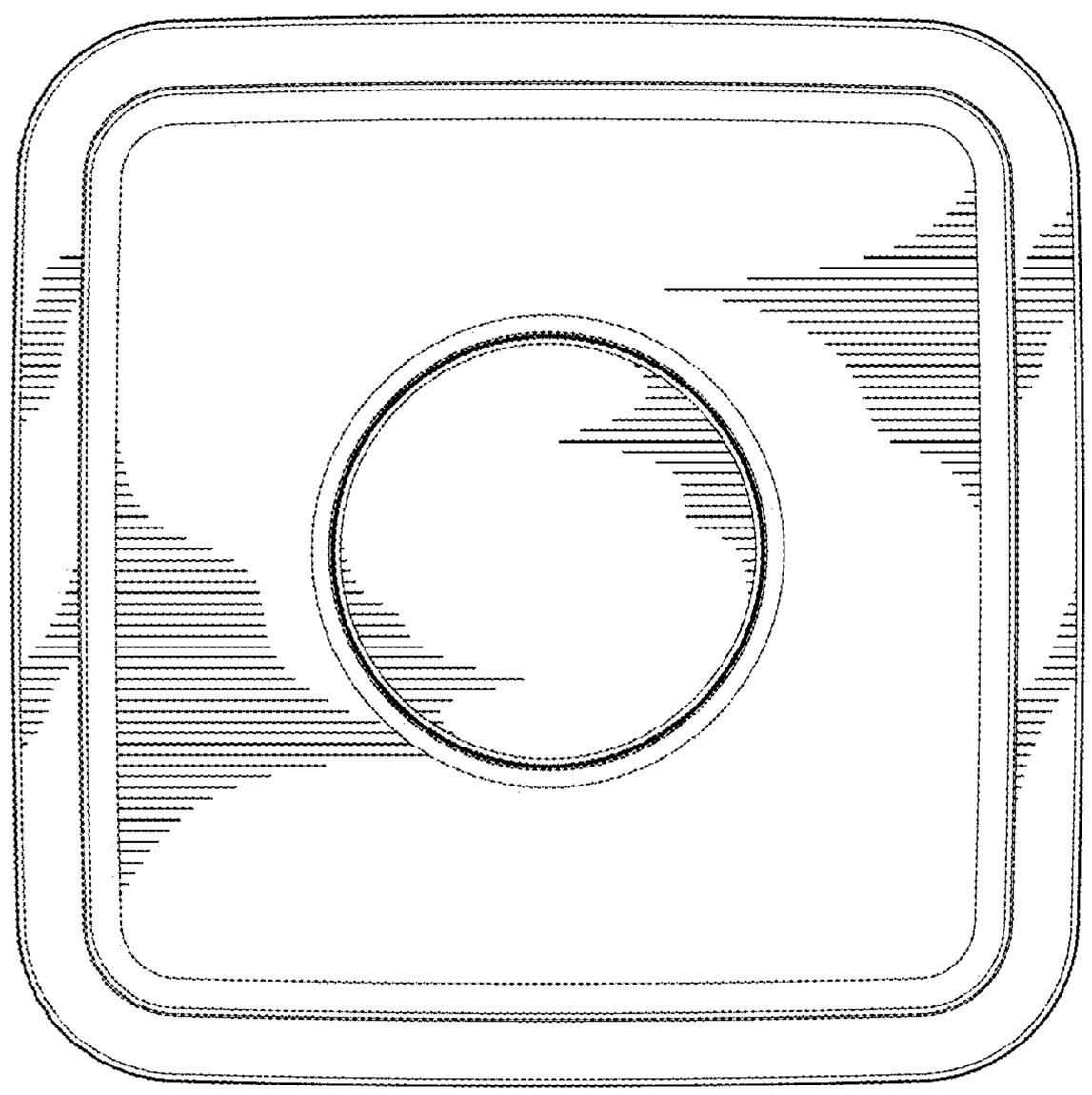

FIG.13

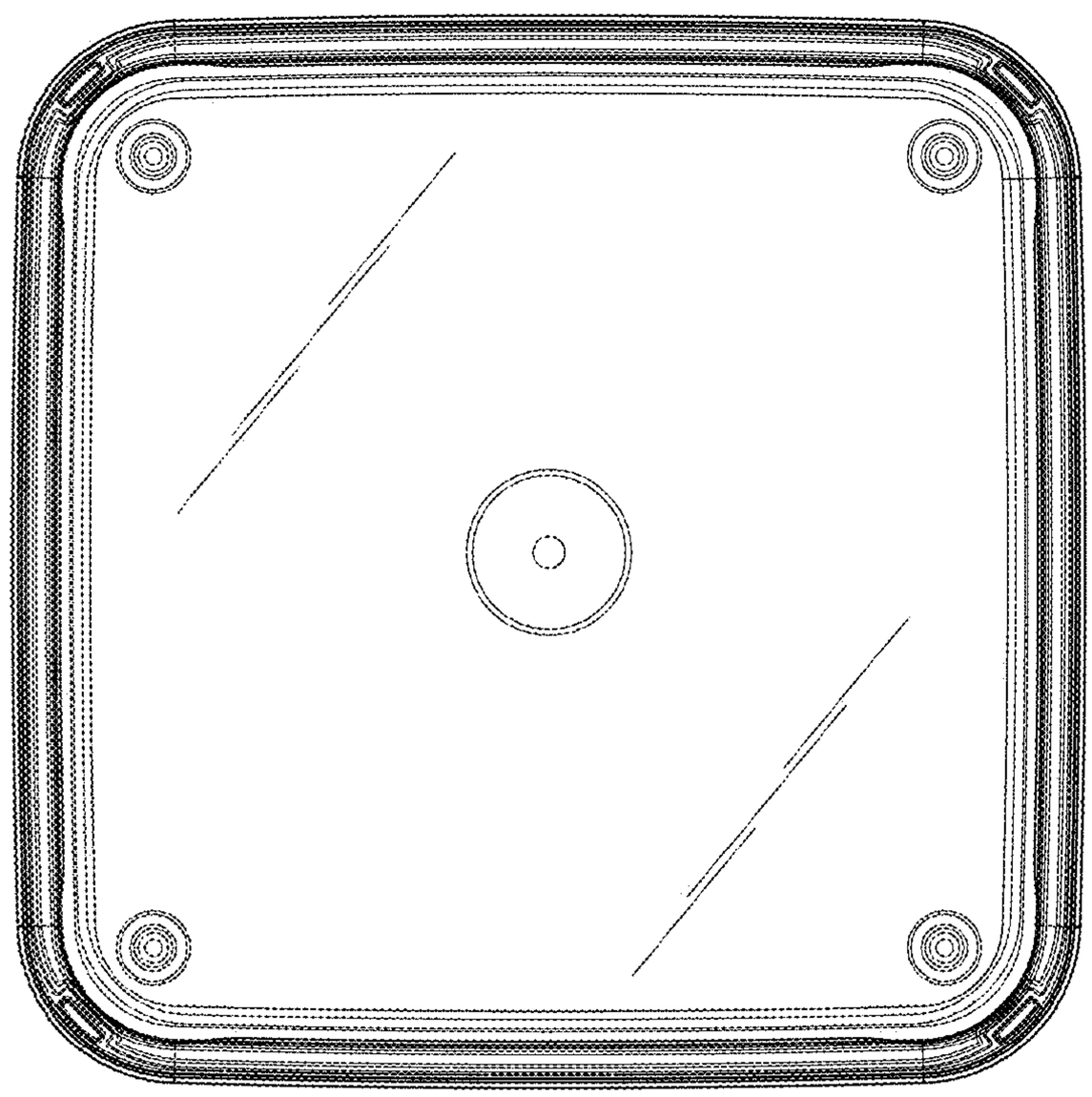

FIG.14

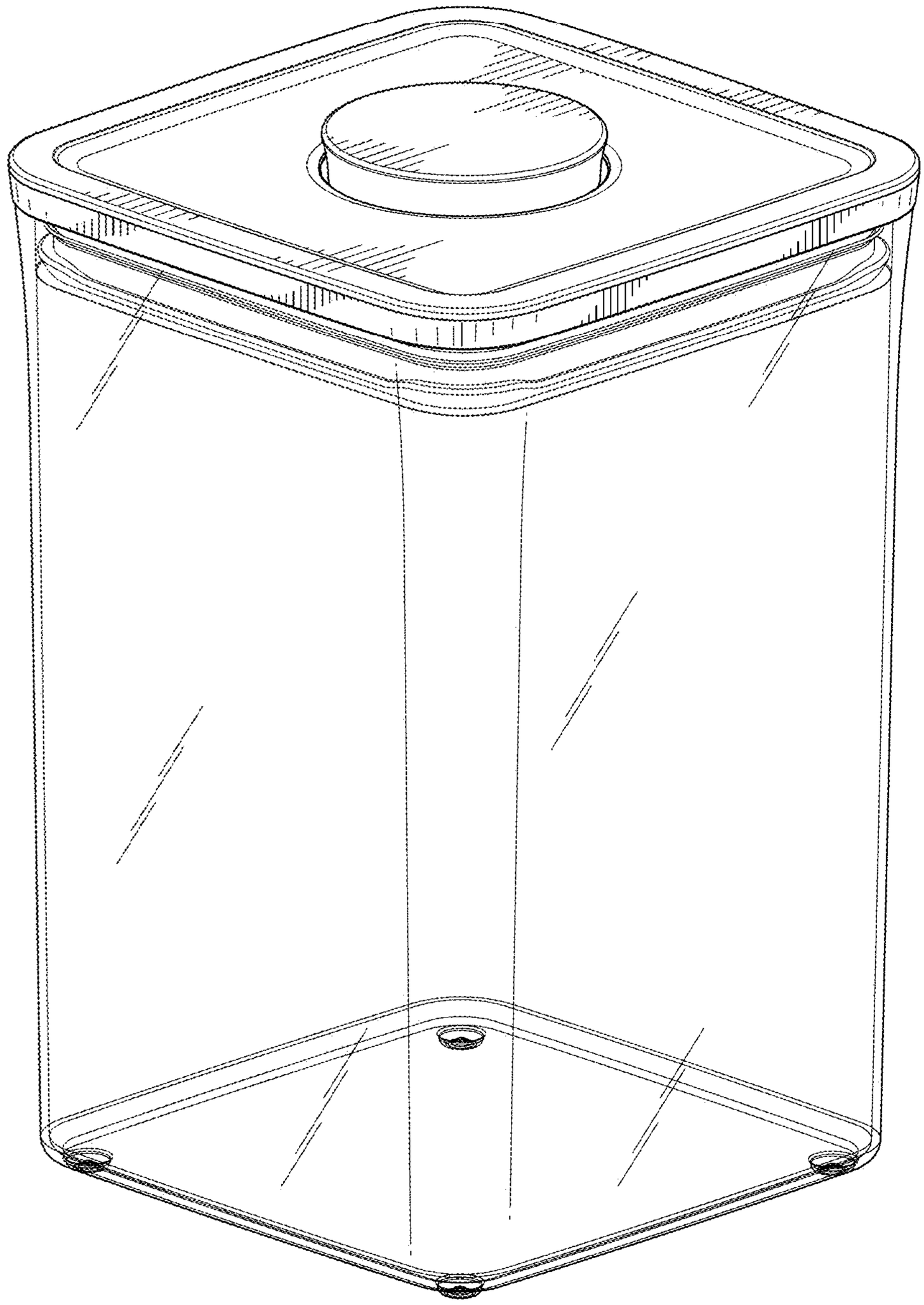

FIG. 15

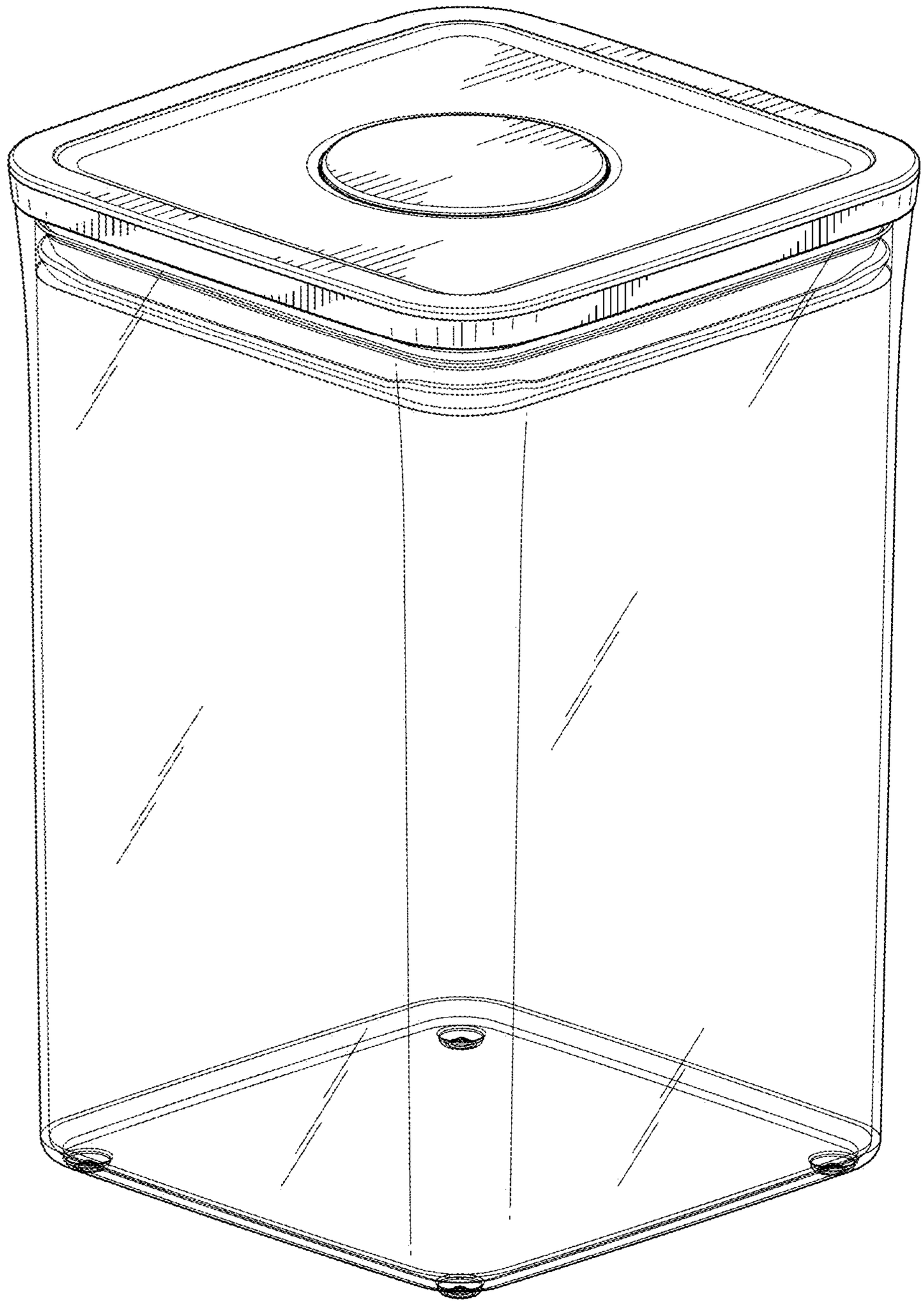

FIG. 16

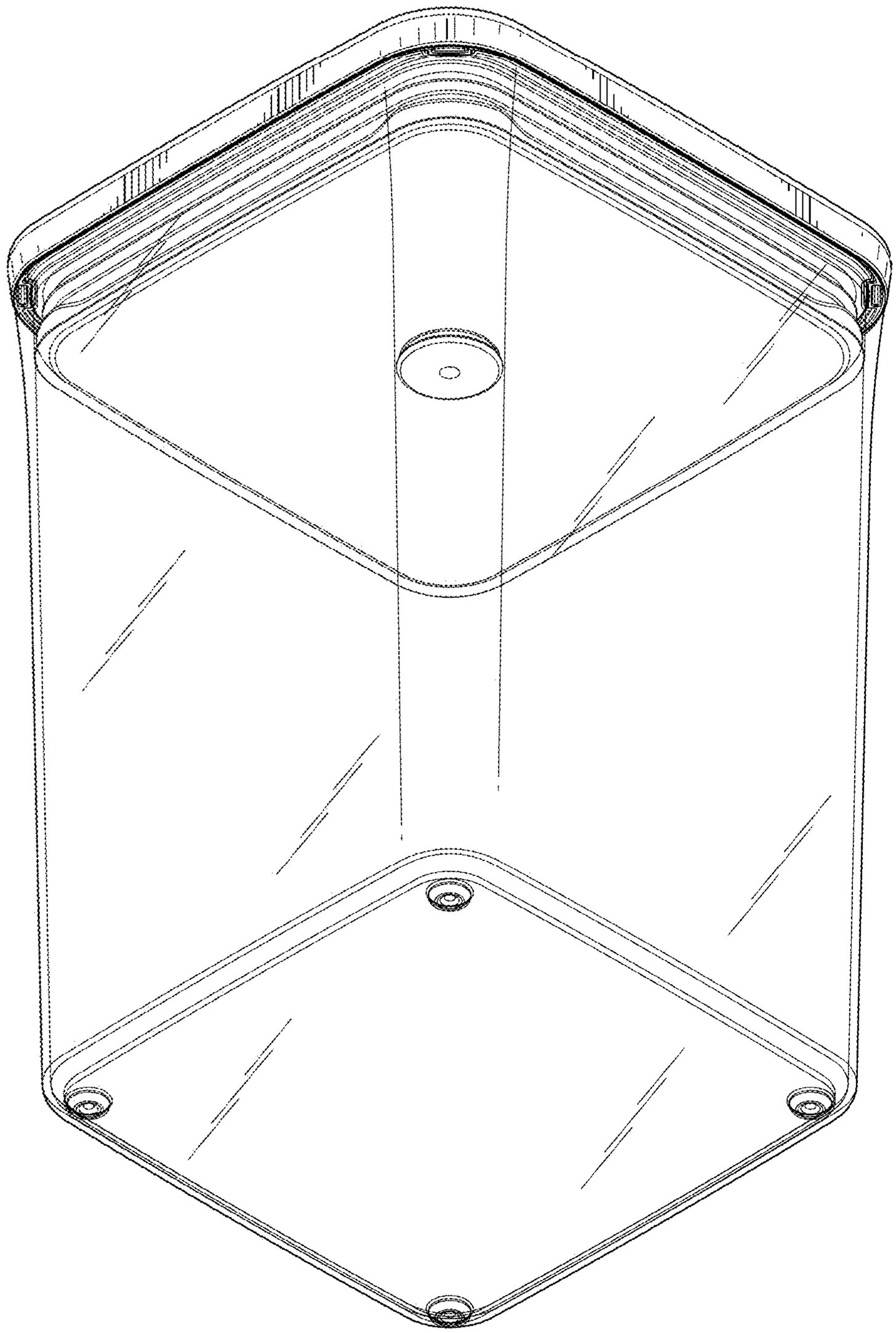

FIG. 17

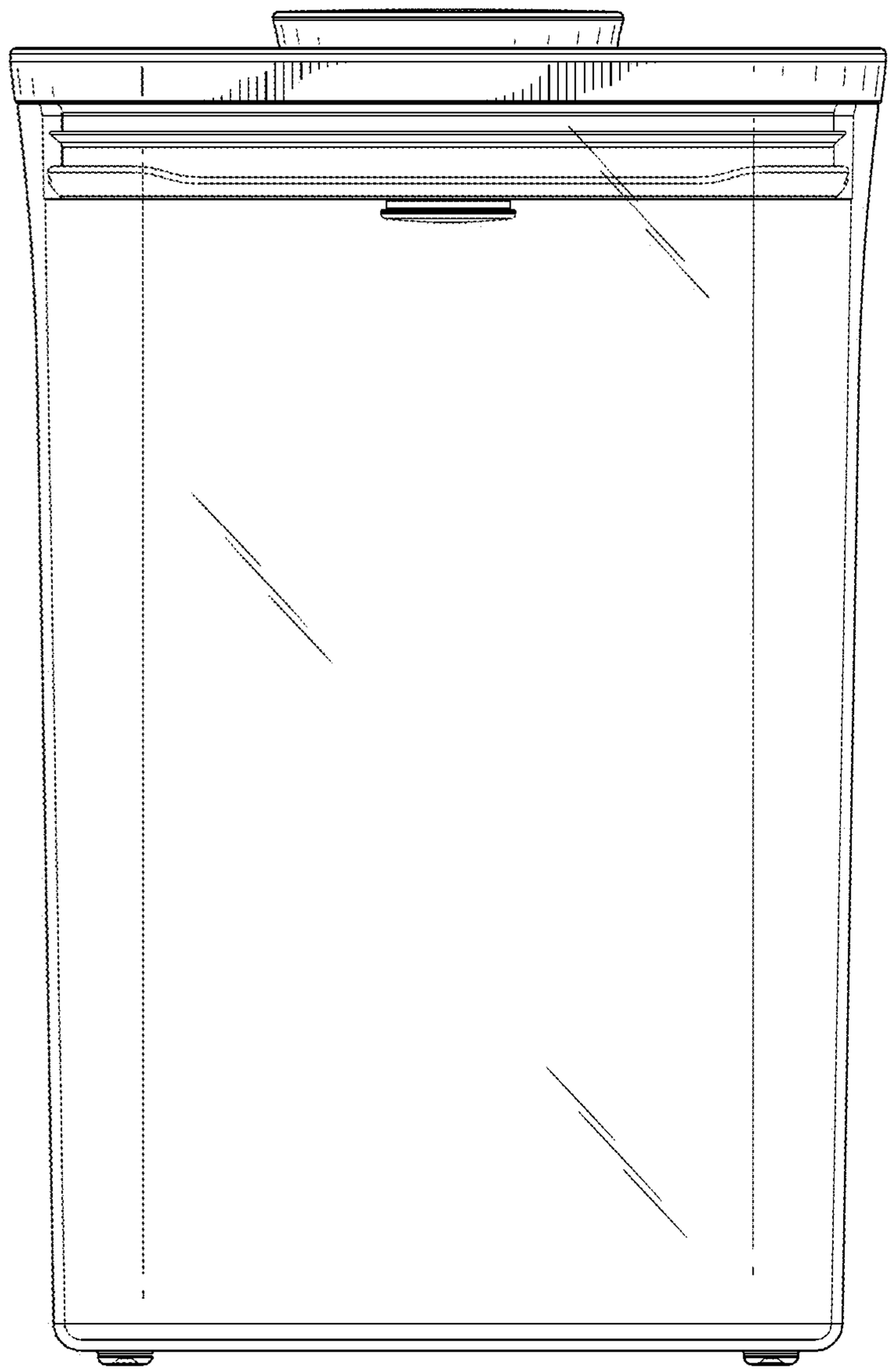

FIG.18

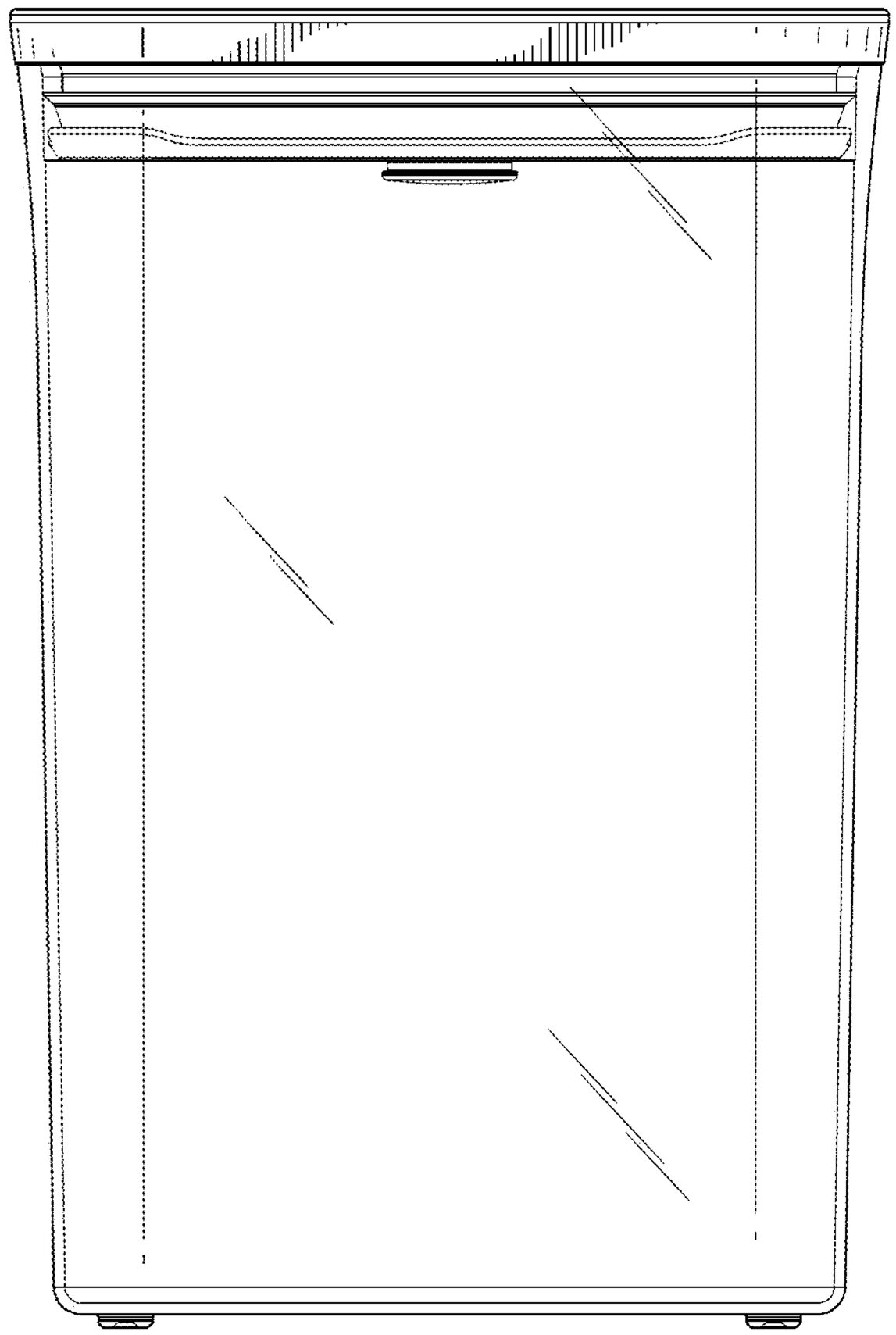

FIG.19

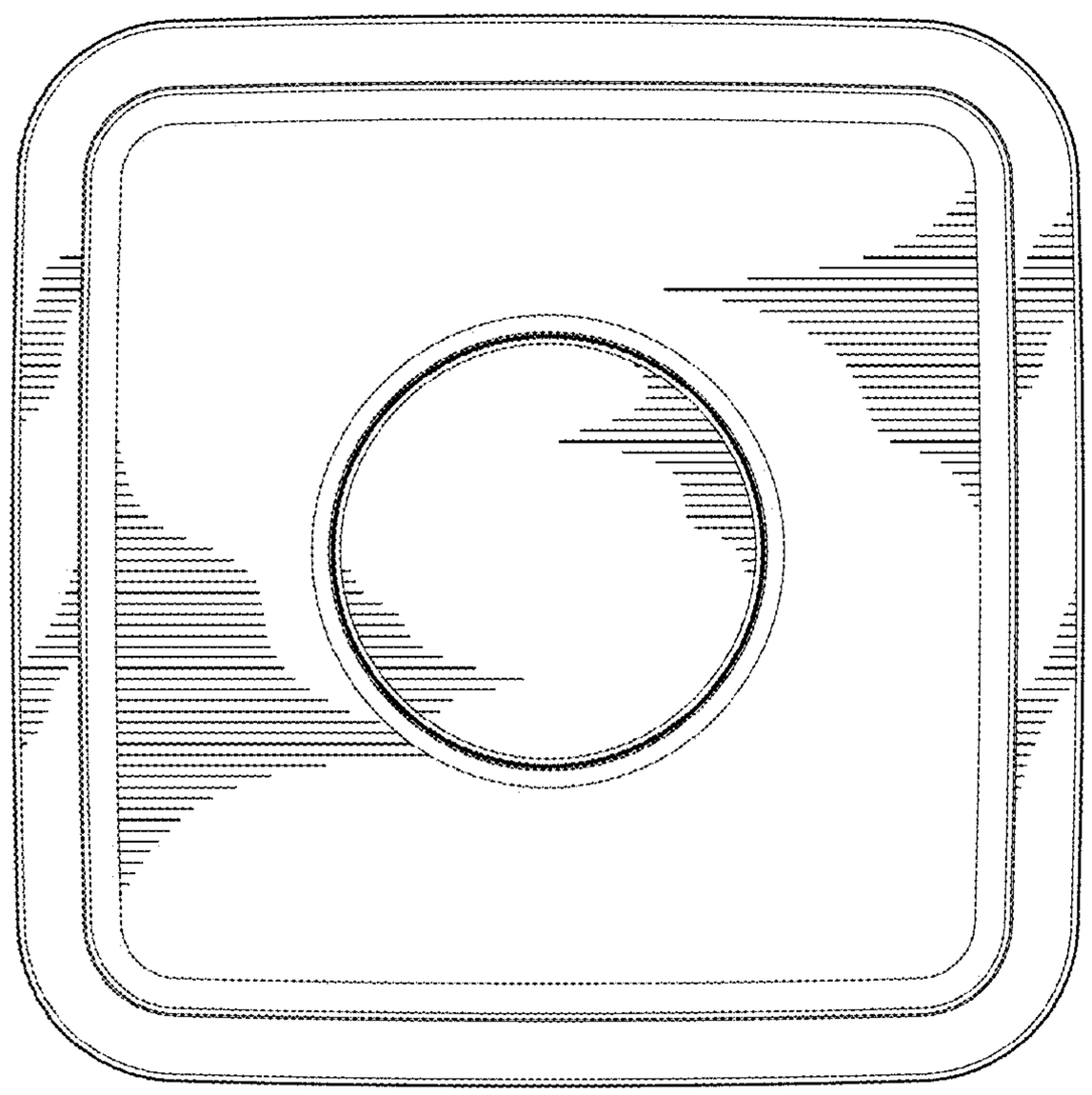

FIG.20

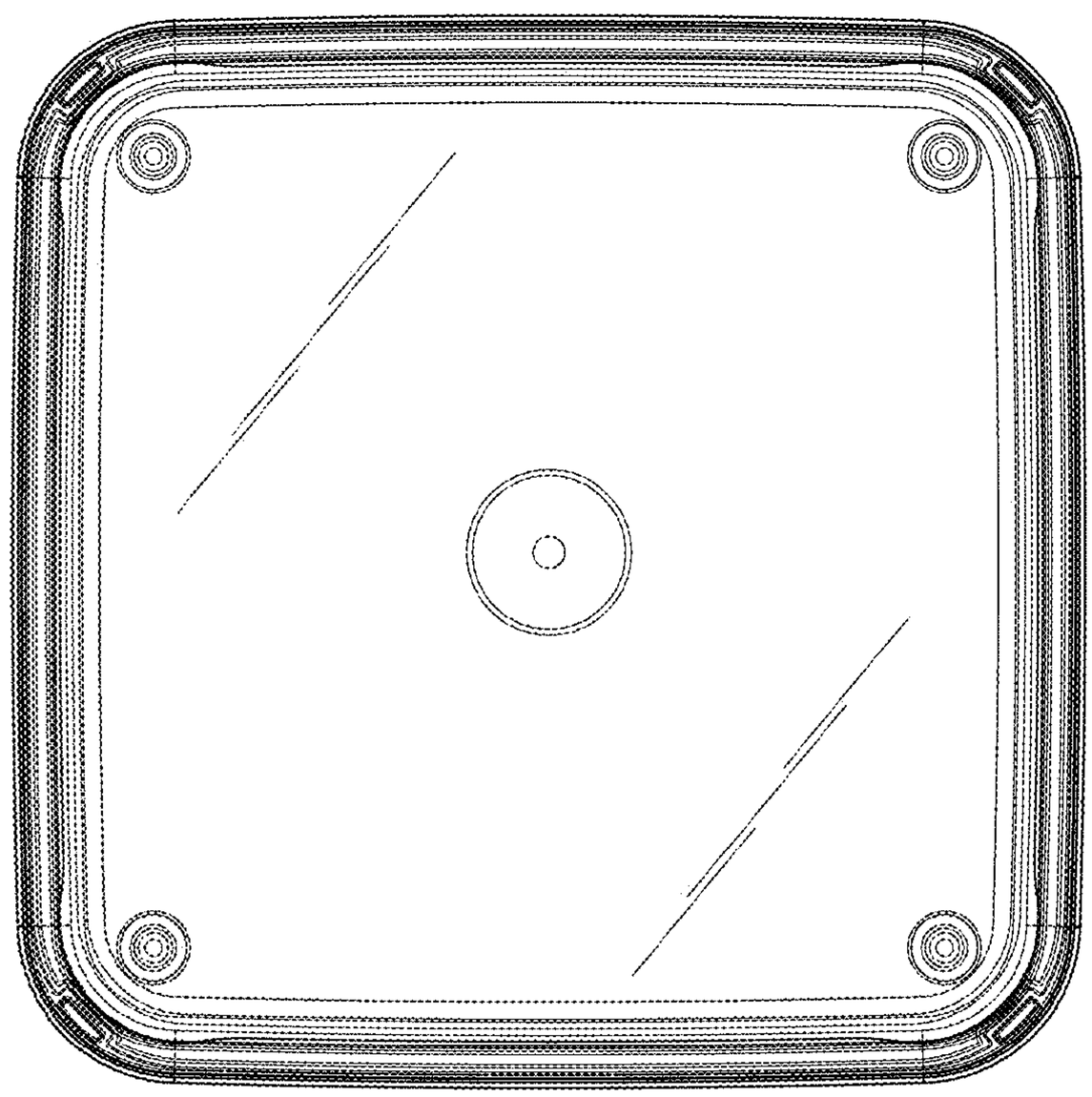

FIG.21

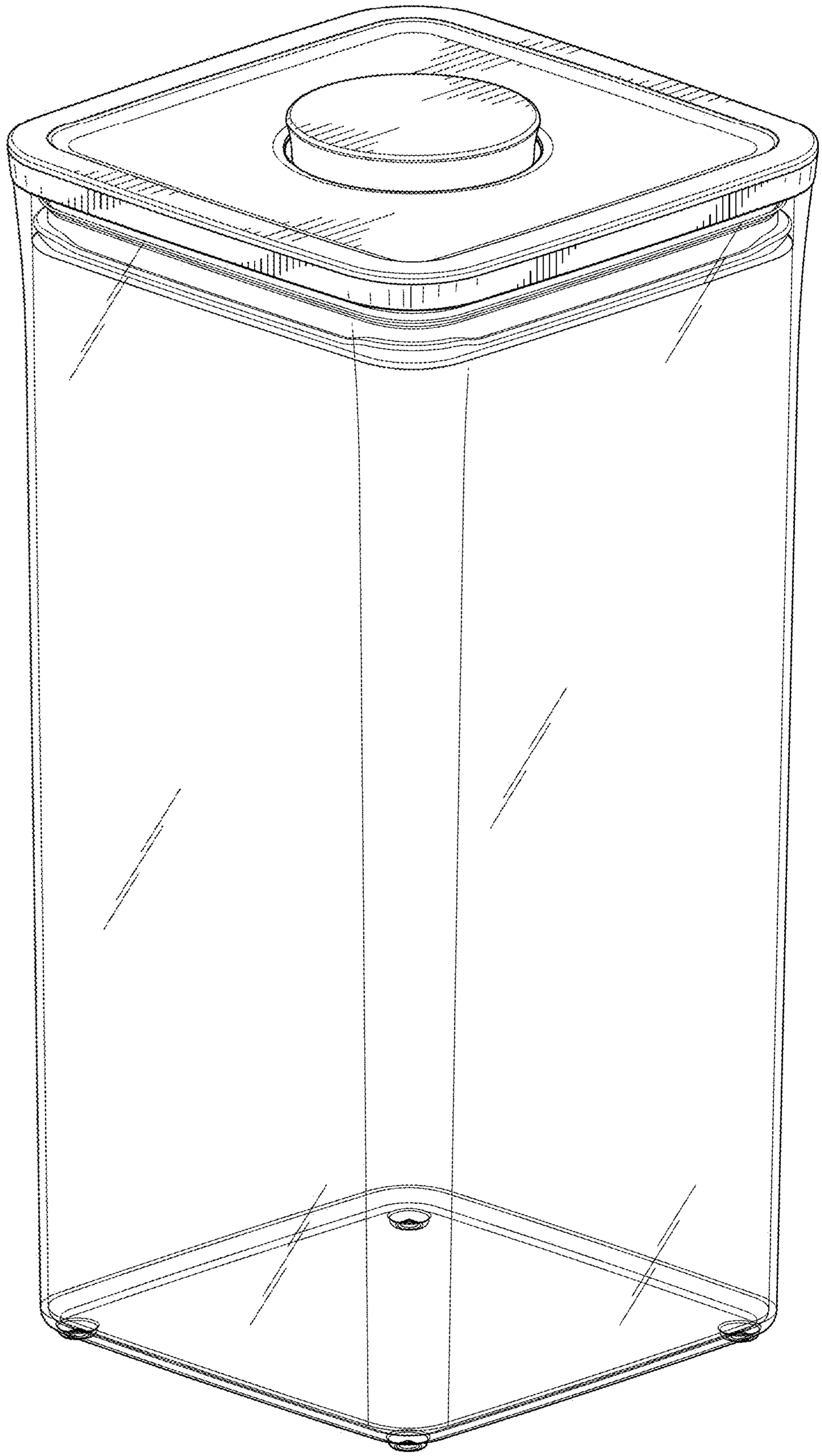

FIG.22

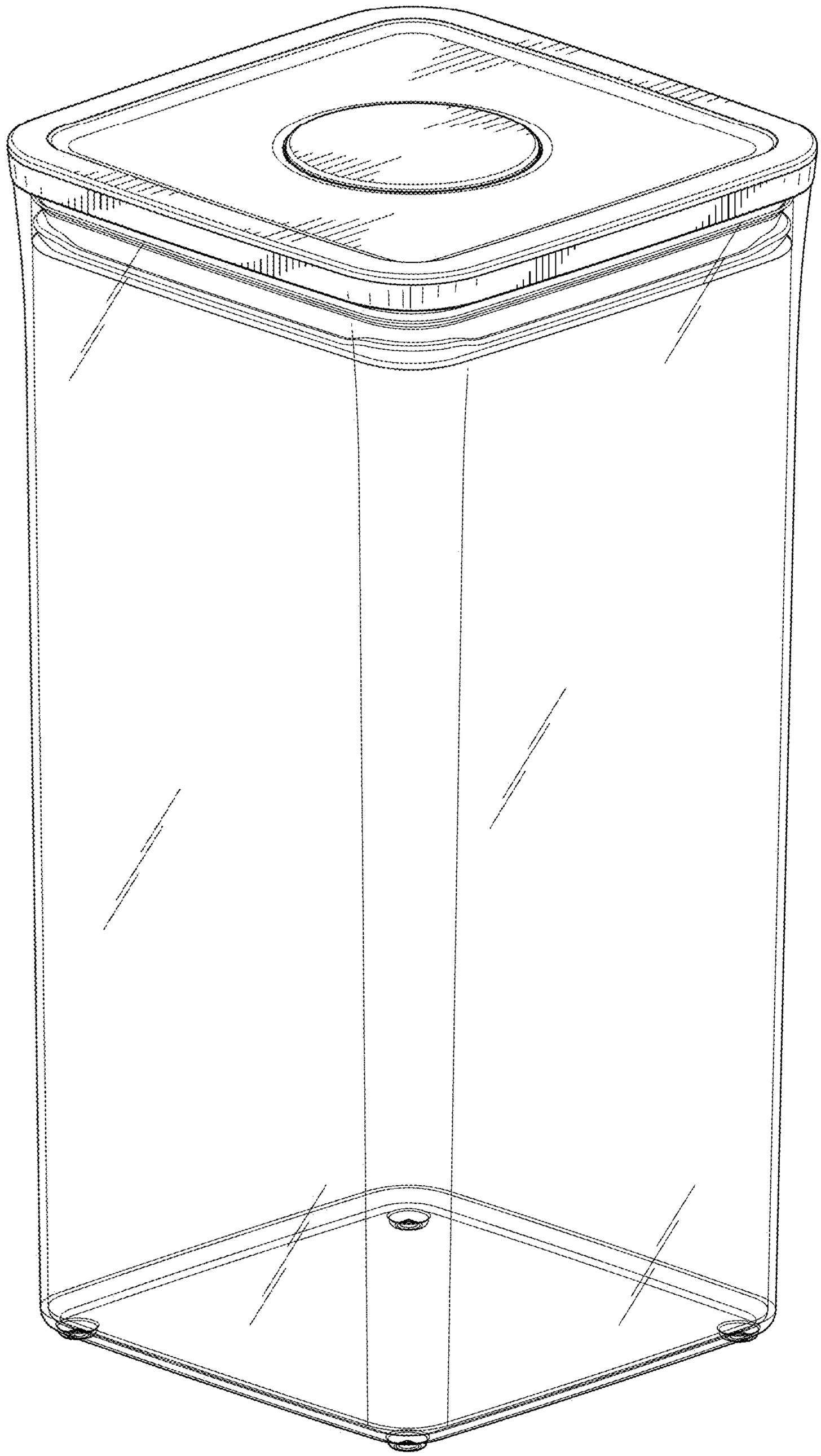

FIG.23

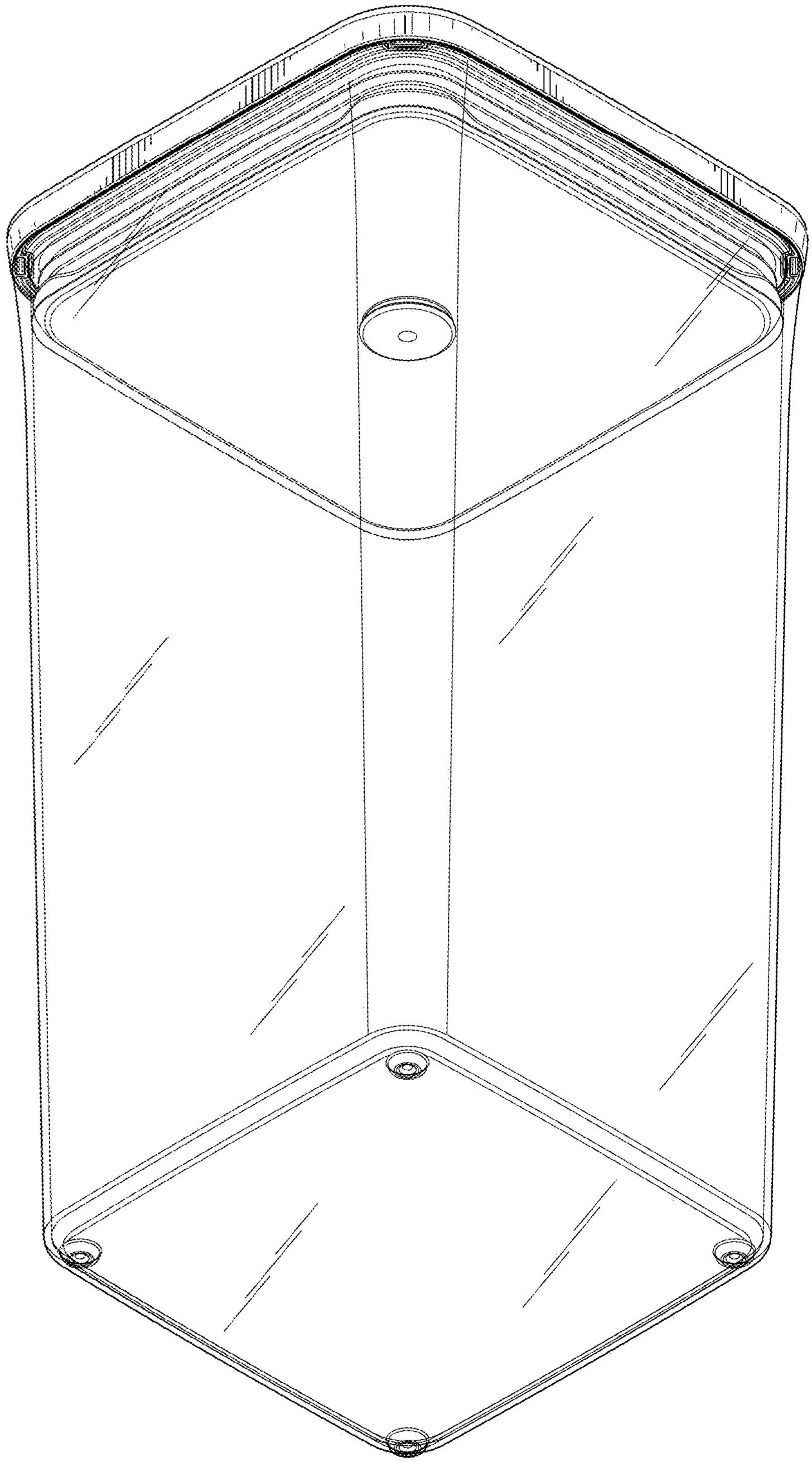

FIG.24

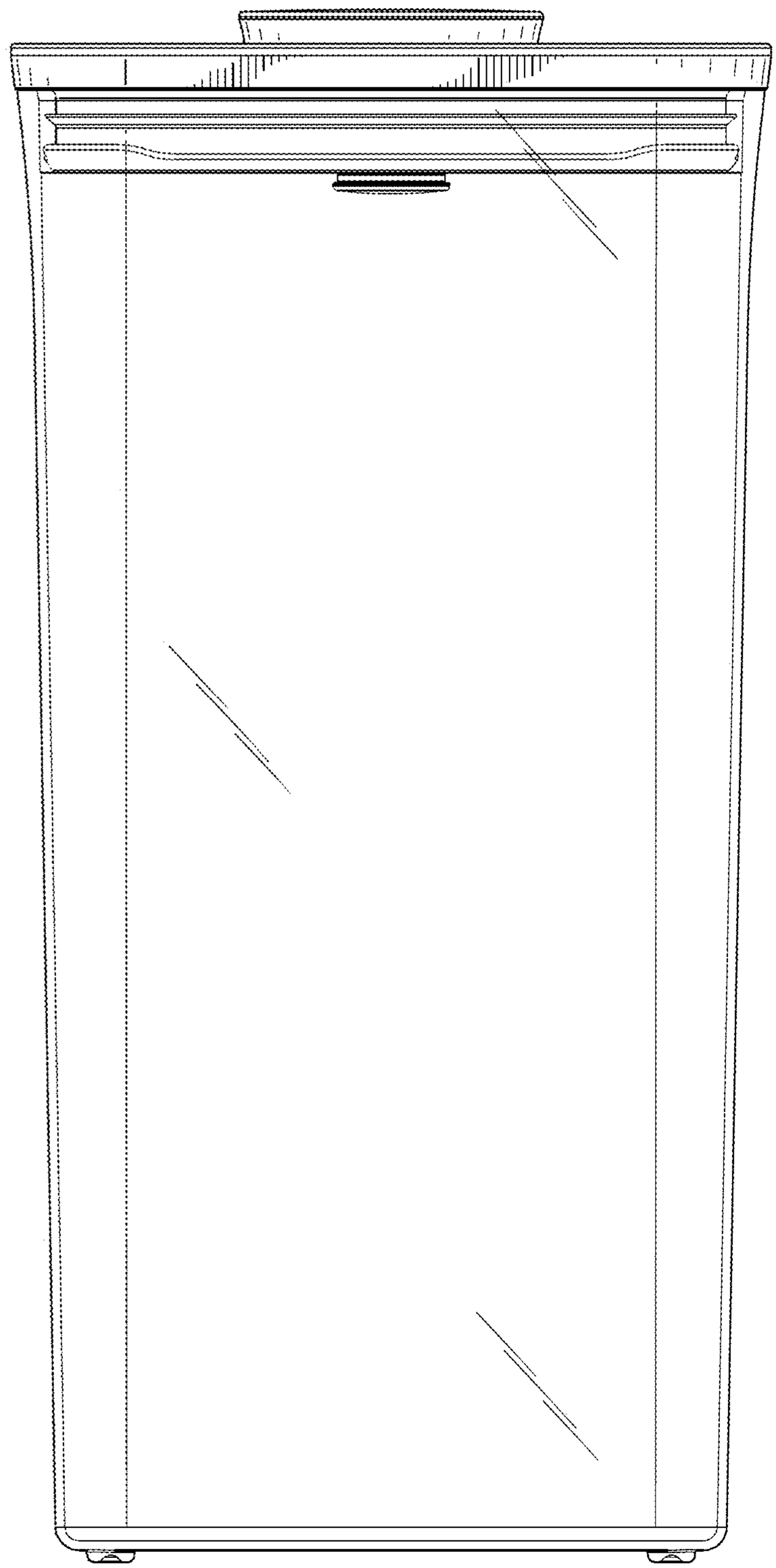

FIG.25

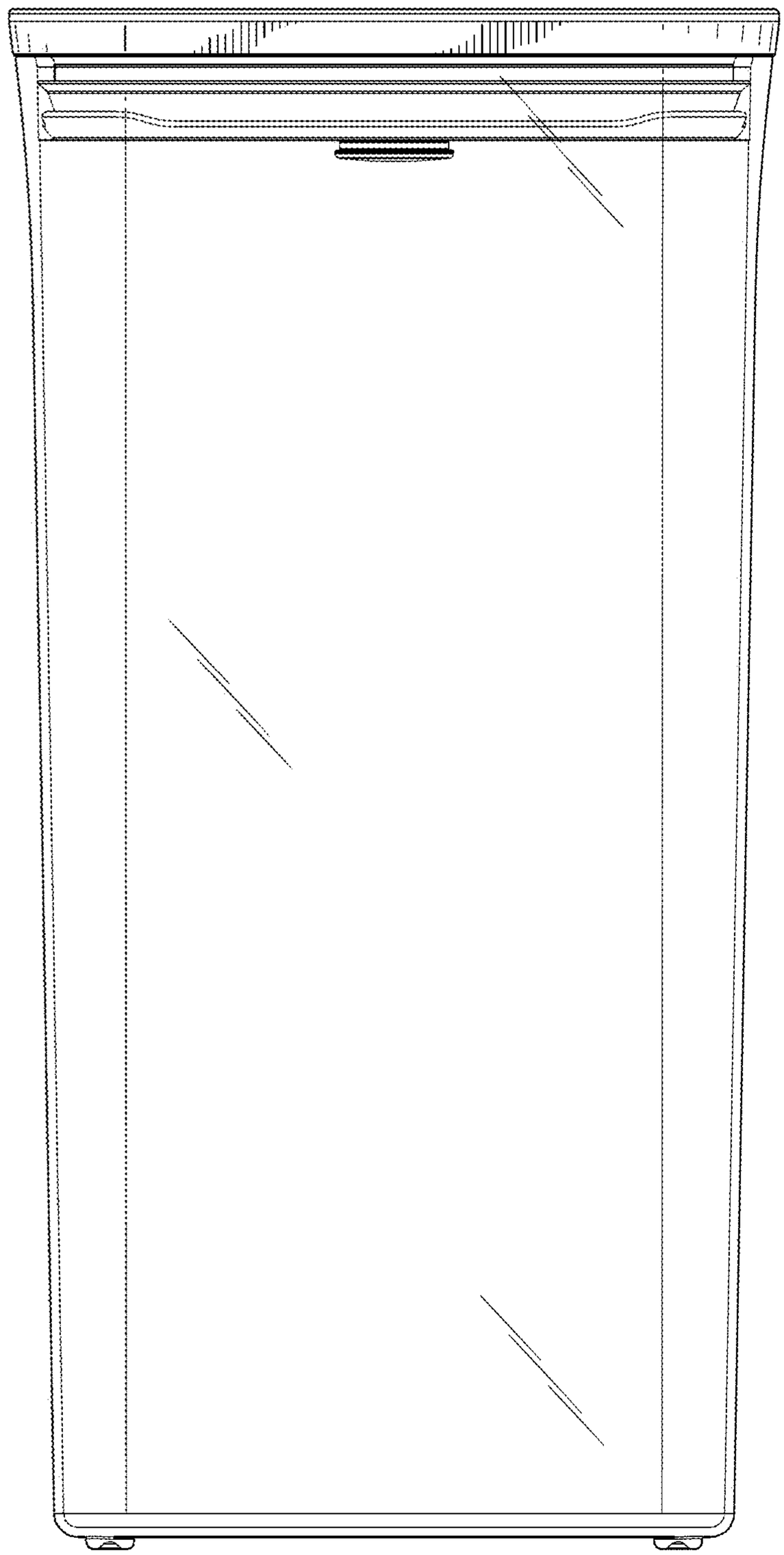

FIG.26

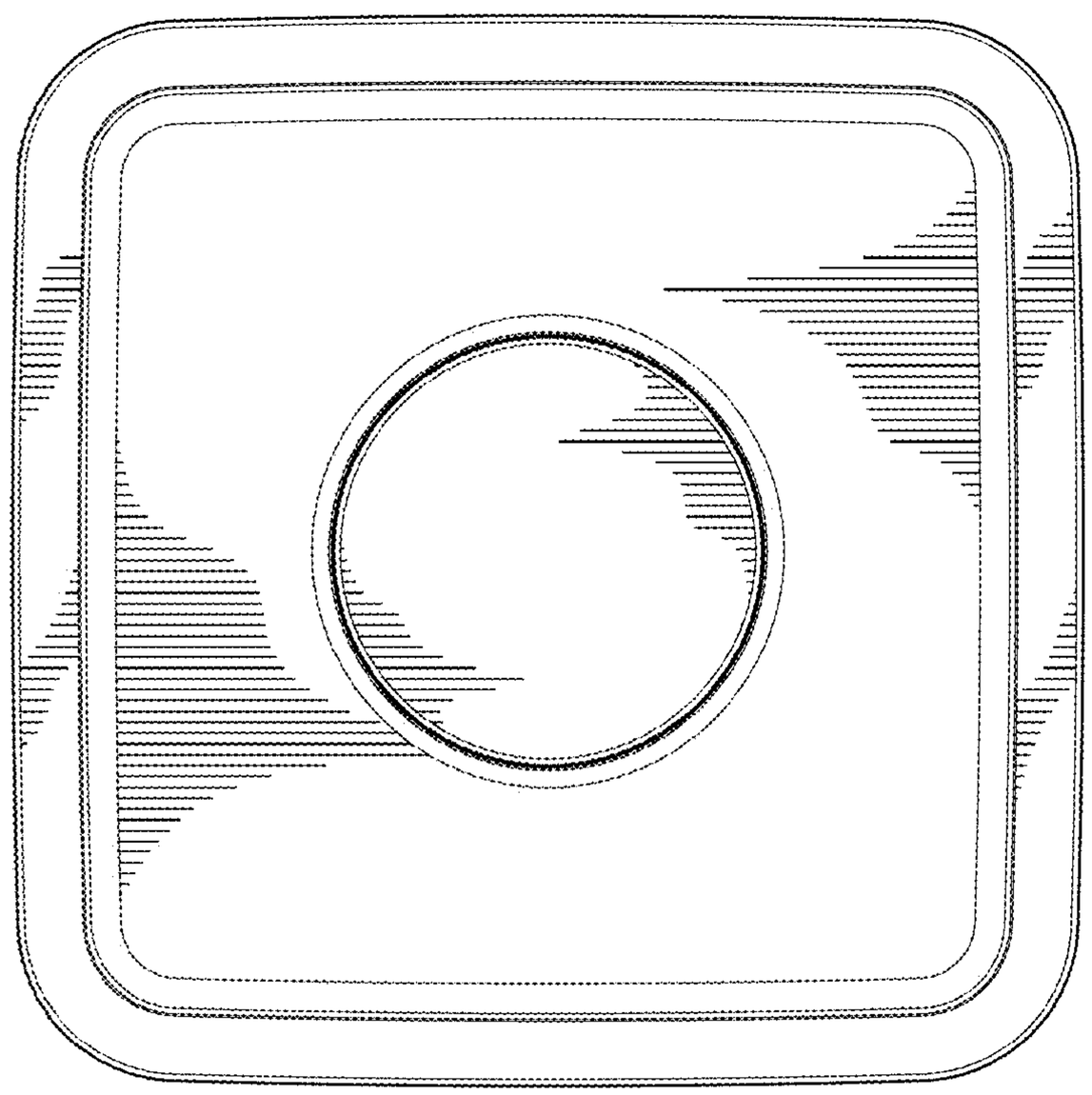

FIG.27

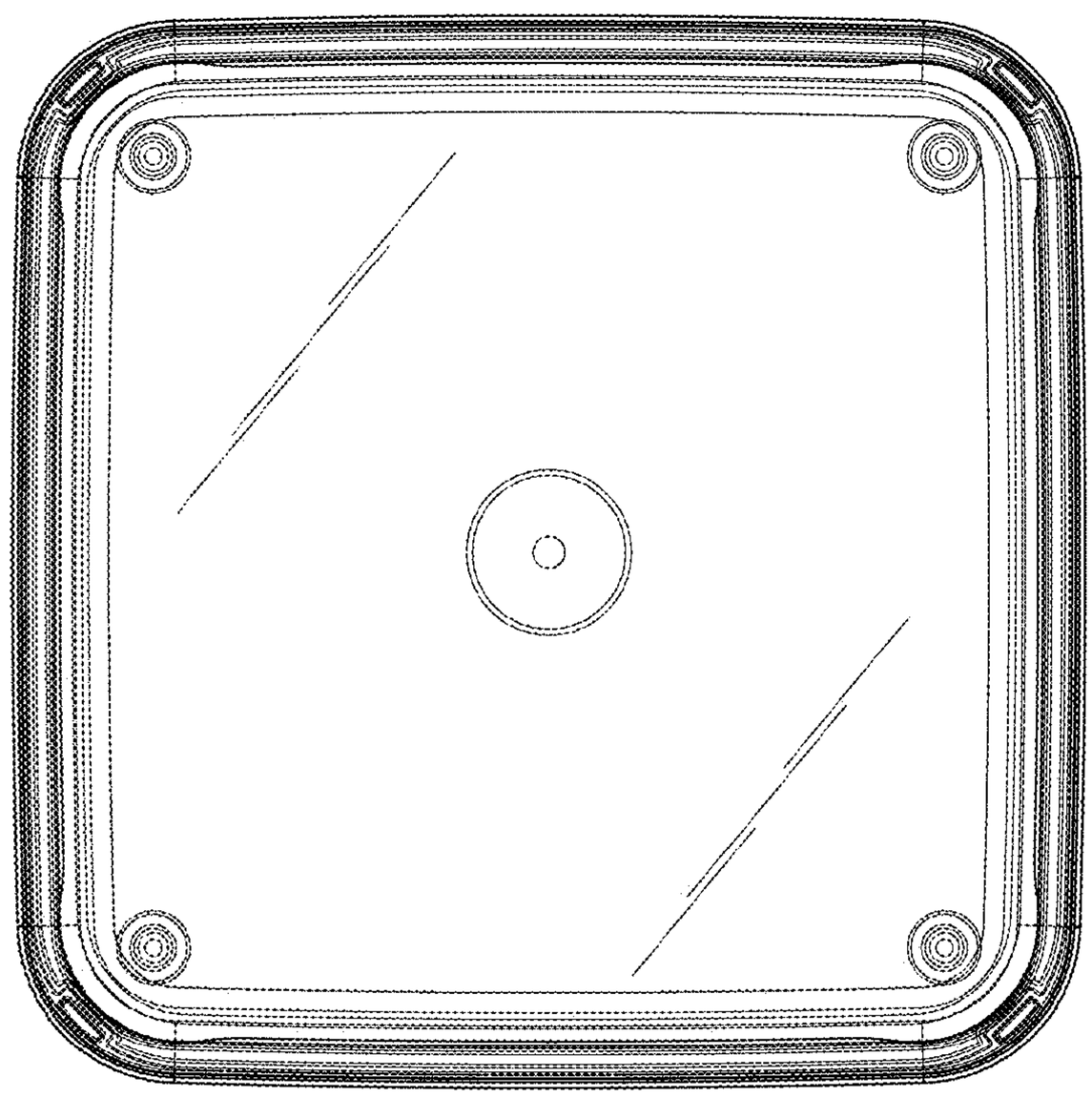

FIG.28

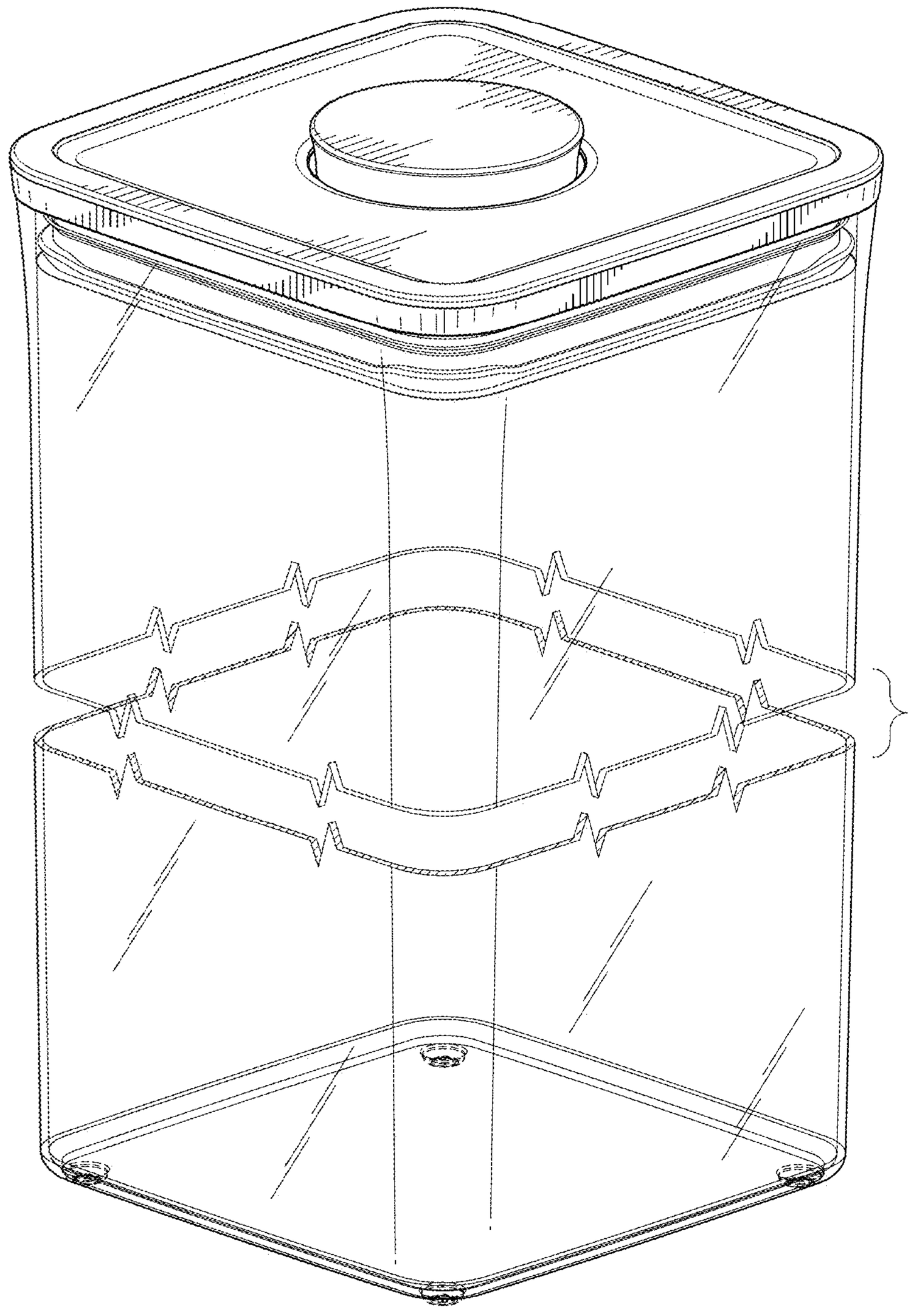

FIG.29

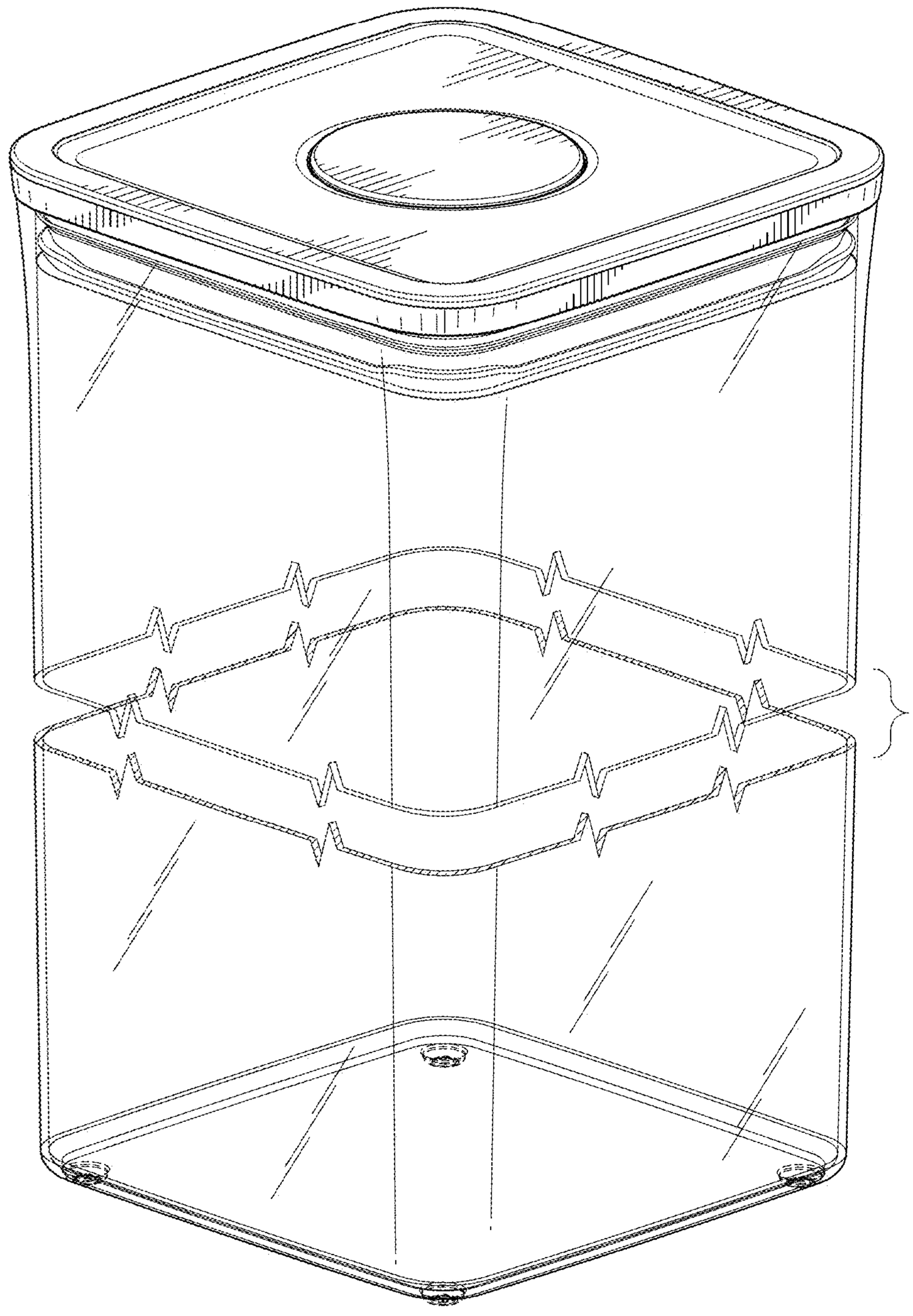

FIG.30

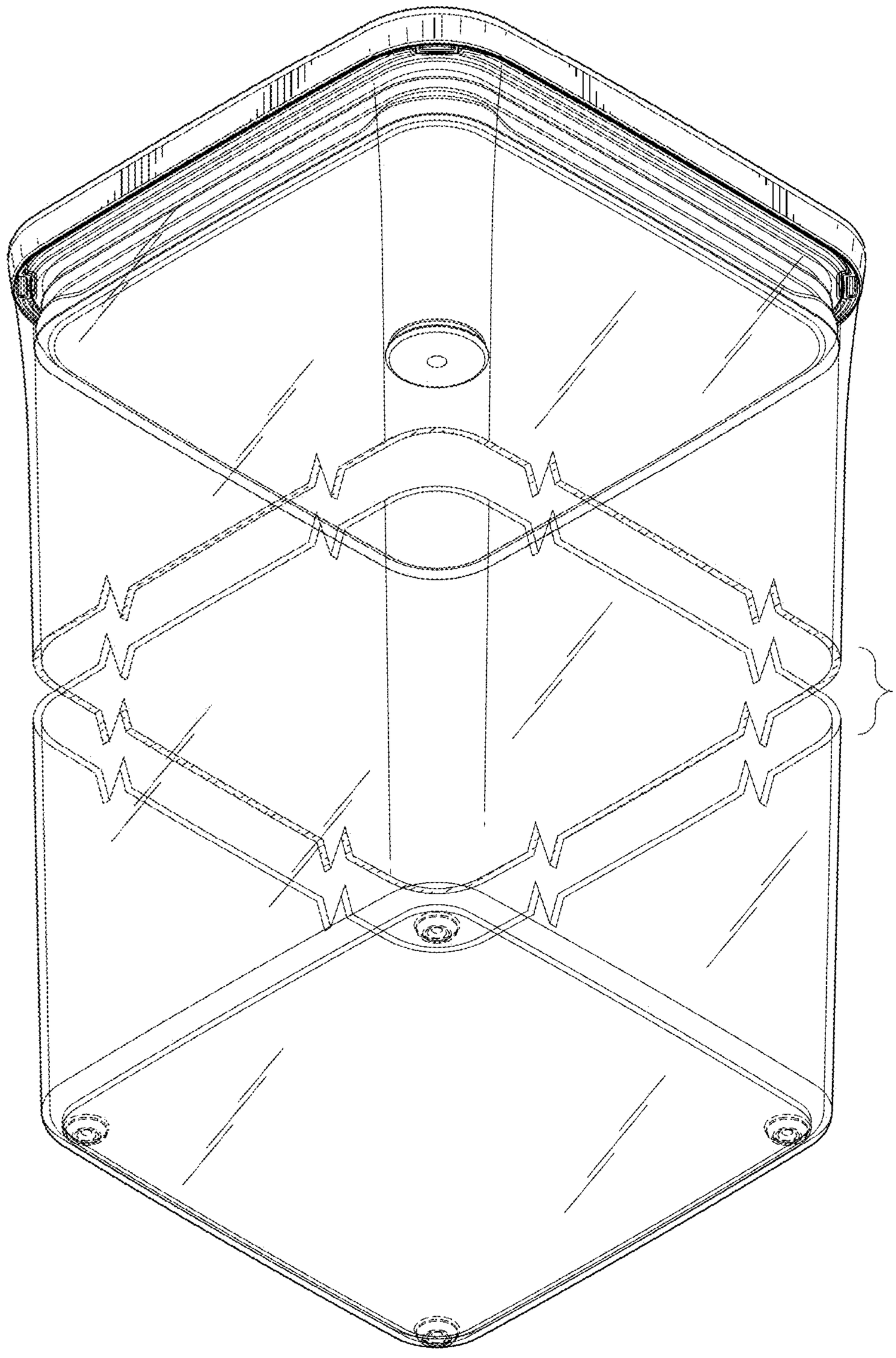

FIG.31

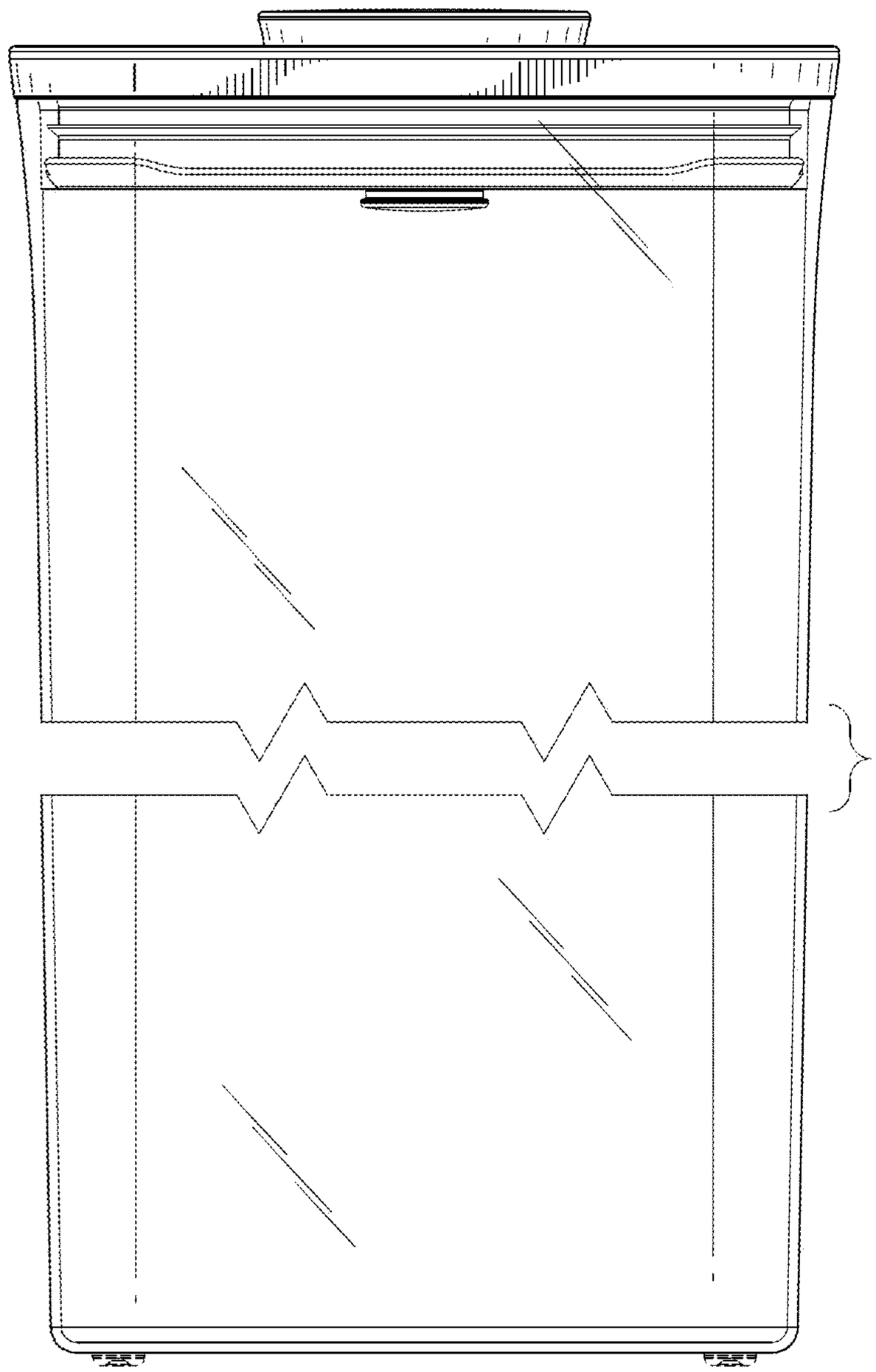

FIG.32

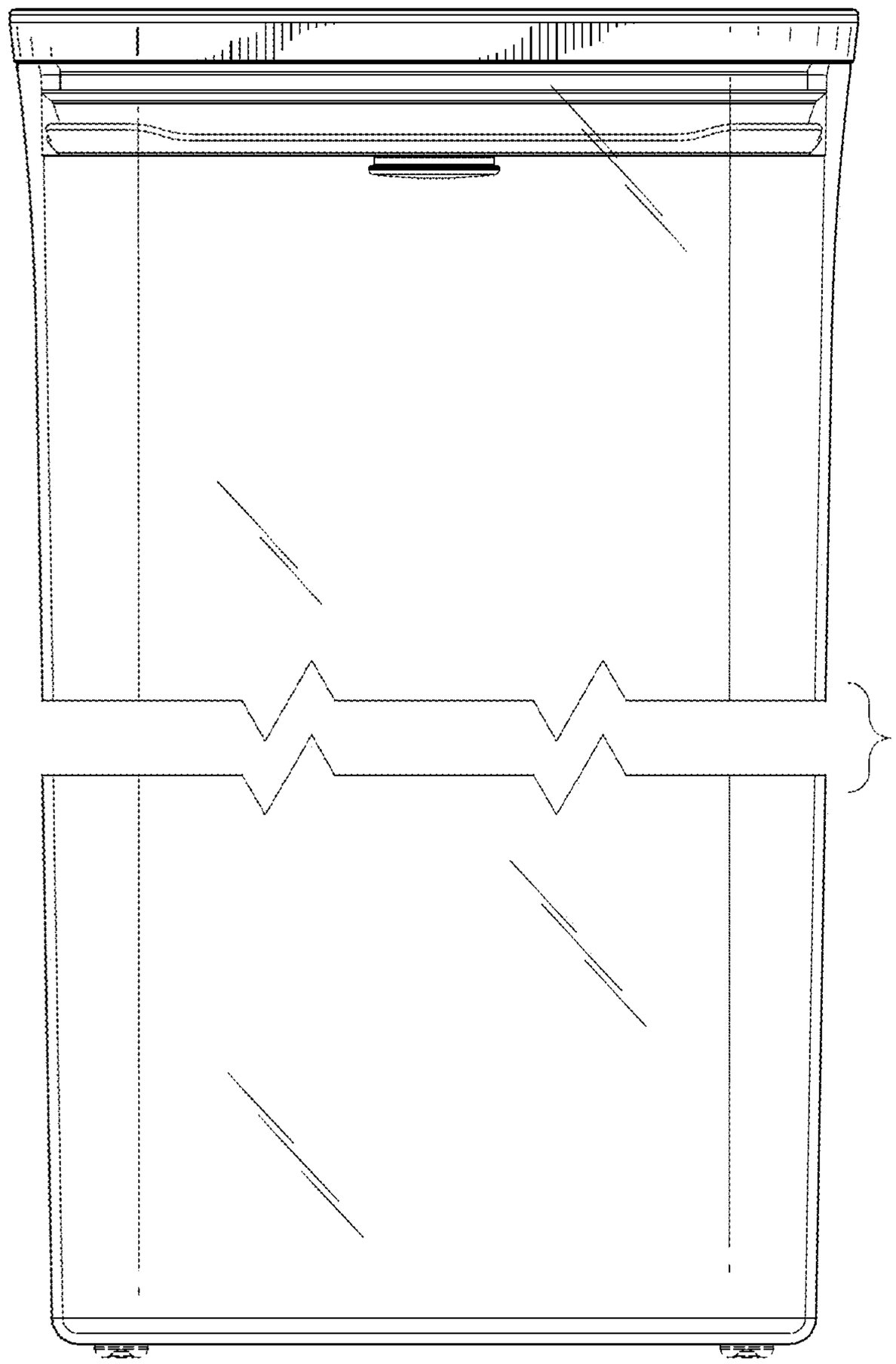

FIG.33

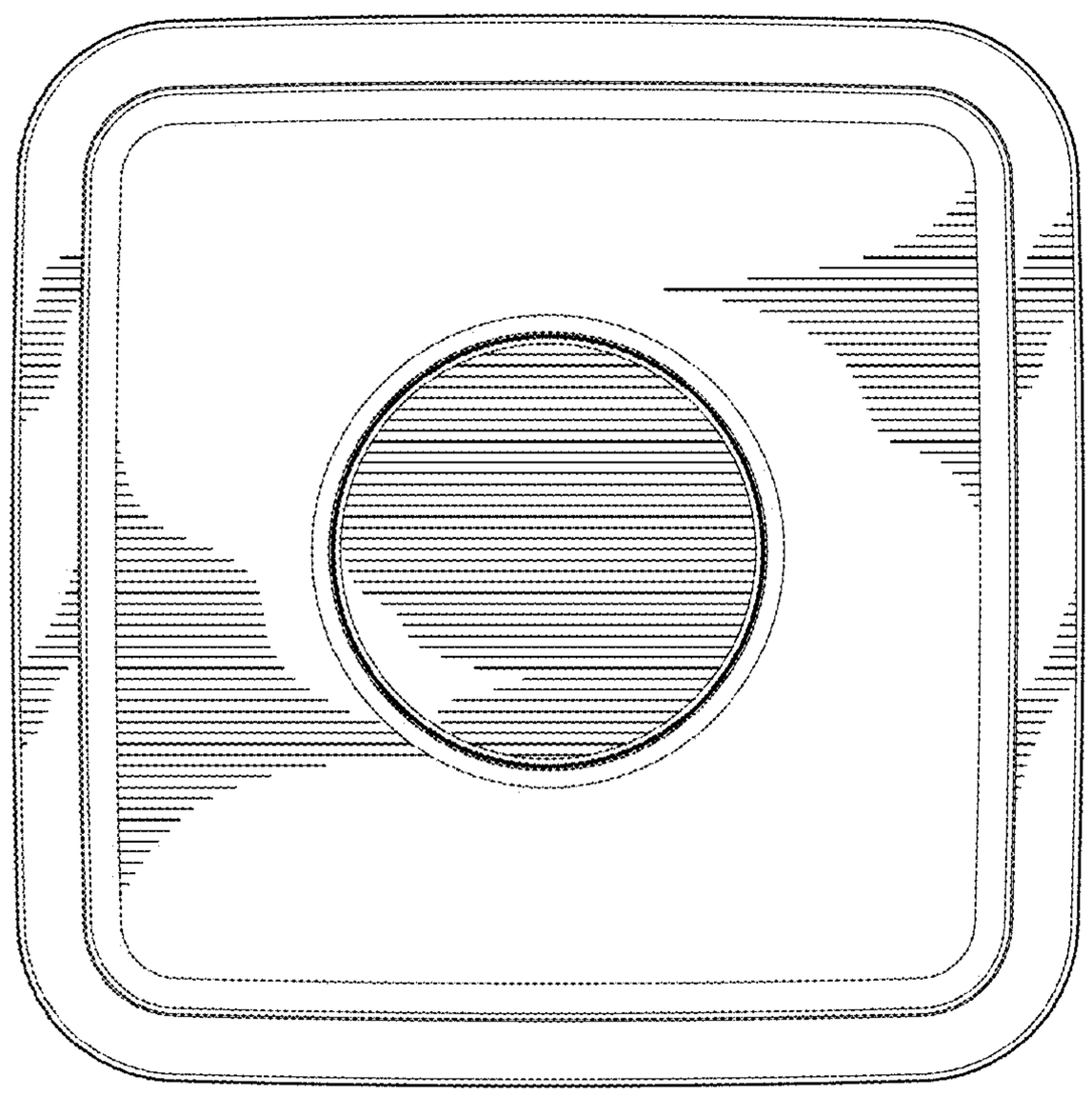

FIG.34

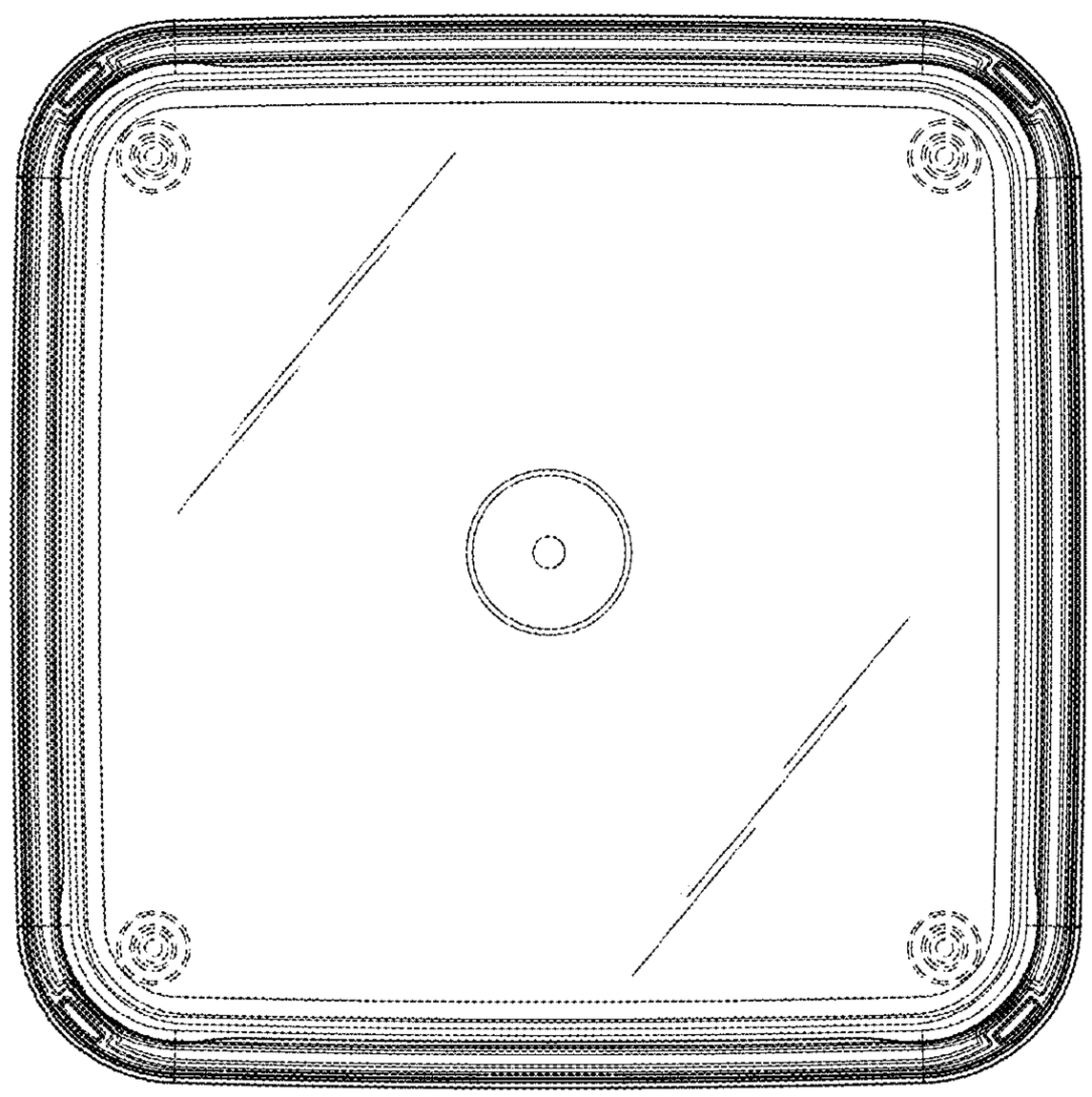

FIG.35