US00D873462S

(12) **United States Design Patent**
Gordin et al.

(10) **Patent No.: US D873,462 S**
(45) **Date of Patent: ** Jan. 21, 2020**

(54) **ADJUSTABLE LIGHTING FIXTURE WITH WRAPAROUND VISOR**

(71) Applicant: **Musco Corporation**, Oskaloosa, IA (US)

(72) Inventors: **Myron Gordin**, Oskaloosa, IA (US); **Joel D. DeBoef**, New Sharon, IA (US); **Steven T. Heaton**, Oskaloosa, IA (US); **Kenneth G. Lewis, Jr.**, New Sharon, IA (US); **Chris P. Lickiss**, Newton, IA (US); **Luke C. McKee**, Oskaloosa, IA (US)

(73) Assignee: **Musco Corporation**, Oskaloosa, IA (US)

(**) Term: **15 Years**

(21) Appl. No.: **29/663,921**

(22) Filed: **Sep. 20, 2018**

(51) **LOC (12) Cl.** **26-05**

(52) **U.S. Cl.**
USPC **D26/63**

(58) **Field of Classification Search**
USPC D26/24, 28, 61–68, 72, 77, 85, 87, 92, D26/118–120
CPC .. F21S 8/003; F21S 8/085; F21S 8/086; F21S 8/088; F21V 15/00; F21V 15/01; F21V 21/22; F21V 21/30; F21V 21/116; F21V 11/04; F21V 11/14; F21W 2131/10; F21W 2131/20; F21W 2131/40; F21W 2131/101; F21W 2131/103; F21W 2131/105; F21W 2131/107; F21W 2131/208; F21W 2131/402; F21W 2131/406; F21W 2131/407; F21W 2131/1005
See application file for complete search history.

(56) **References Cited**

U.S. PATENT DOCUMENTS

D411,025 S * 6/1999 Rahn D26/63
D447,590 S * 9/2001 Raouf D26/71
6,467,928 B2 * 10/2002 Crelin F21S 8/033 362/147
D472,339 S * 3/2003 Russello D26/63
D695,949 S 12/2013 Gordin et al.
D695,952 S 12/2013 Gordin et al.
D734,532 S 7/2015 Gordin et al.
D743,602 S 11/2015 Gordin et al.
(Continued)

OTHER PUBLICATIONS

Gordin, Myron et al., unpublished Pending Design U.S. Appl. No. 29/637,422, Adjustable Lighting Fixture With Wraparound Visor, filed Feb. 19, 2018.
(Continued)

Primary Examiner — Wan Laymon
Assistant Examiner — Clint A Samuel
(74) *Attorney, Agent, or Firm* — Jessica R. Boer

(57) **CLAIM**

The ornamental design for an adjustable lighting fixture with wraparound visor, as shown and described.

DESCRIPTION

FIG. **1** is a top front perspective view of the claimed design;
FIG. **2** is a bottom front perspective view of the design;
FIG. **3** is a front elevation of FIG. **1**;
FIG. **4** is a back elevation of FIG. **1**;
FIG. **5** is a right side elevation of FIG. **1**;
FIG. **6** is a left side elevation of FIG. **1**;
FIG. **7** is a top plan view of FIG. **1**; and,
FIG. **8** is a bottom plan view of FIG. **1**.
The broken lines shown in the drawings illustrate unclaimed portions of or environmental structure related to the adjustable lighting fixture with wraparound visor, and form no part of the claimed design.

1 Claim, 8 Drawing Sheets

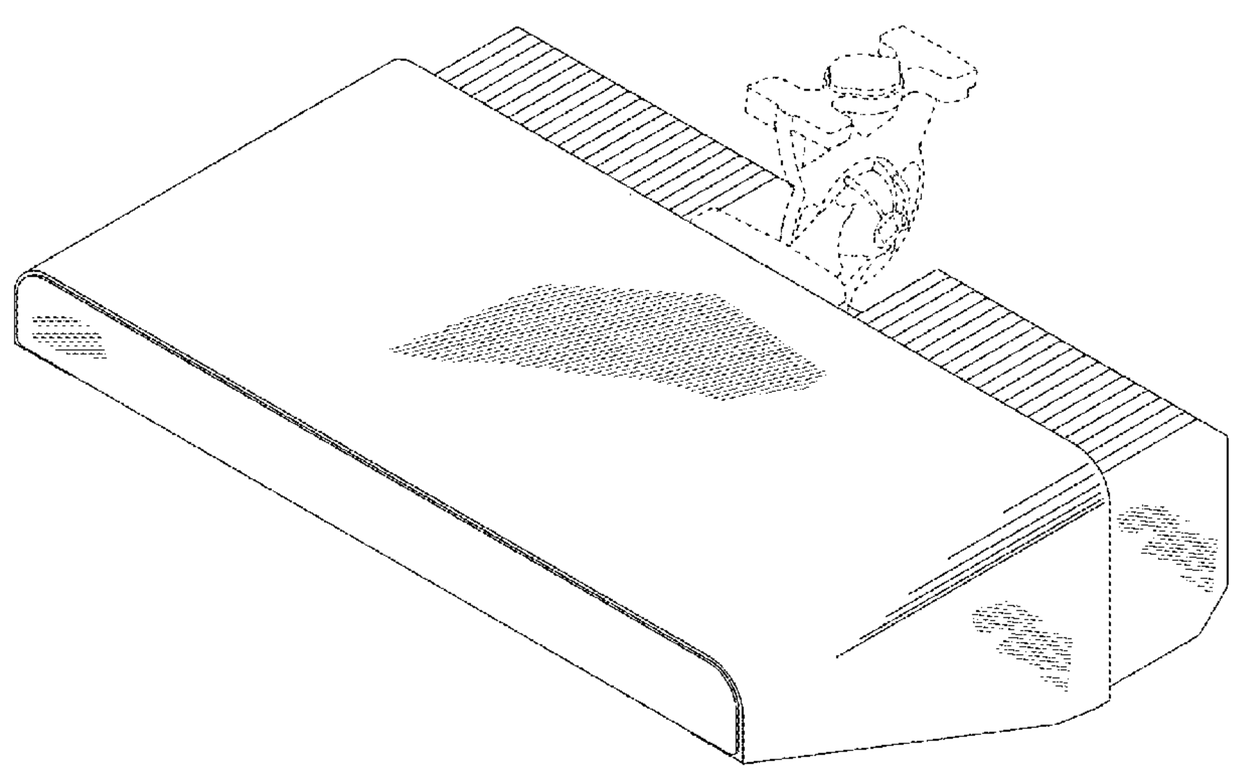

(56) **References Cited**

U.S. PATENT DOCUMENTS

D749,767	S	*	2/2016	Jin	D26/63
D771,854	S		11/2016	Gordin et al.	
D782,720	S	*	3/2017	Moghal	D26/67
D790,107	S	*	6/2017	Wilmotte	D26/92
D808,052	S		1/2018	Gordin et al.	
D808,053	S		1/2018	Gordin et al.	
9,964,267	B1	*	5/2018	Van Ee	F21S 8/086
D833,662	S	*	11/2018	Gordin	D26/63
D841,854	S	*	2/2019	Gordin	D26/63
D841,855	S	*	2/2019	Gordin	D26/63
D841,856	S	*	2/2019	Gordin	D26/63
10,215,378	B2	*	2/2019	Kinnune	F21V 21/00
D843,040	S	*	3/2019	Xiang	D26/63
D846,171	S	*	4/2019	Zhu	D26/63
2017/0138579	A1	*	5/2017	Kuti	F21V 15/01
2017/0307149	A1	*	10/2017	Clark	F21V 29/76
2019/0178485	A1	*	6/2019	Ladewig	F21S 2/00

OTHER PUBLICATIONS

Gordin, Myron et al., unpublished Pending Design U.S. Appl. No. 29/637,423, Adjustable Lighting Fixture With Wraparound Visor, filed Feb. 19, 2018.

Gordin, Myron et al., unpublished Pending Design U.S. Appl. No. 29/637,425, Adjustable Lighting Fixture With Wraparound Visor, filed Feb. 19, 2018.

Gordin, Myron et al., unpublished Pending Design U.S. Appl. No. 29/637,504, Adjustable Lighting Fixture With Wraparound Visor, filed Feb. 19, 2018.

Gordin, Myron et al., unpublished Pending Design Application U.S. Appl. No. 29/637,505, Adjustable Lighting Fixture With Wraparound Visor, filed Feb. 19, 2018.

Gordin, Myron et al., unpublished Pending Design Application U.S. Appl. No. 29/637,508, Adjustable Lighting Fixture With Wraparound Visor, filed Feb. 19, 2018.

Gordin, Myron et al., unpublished Pending Design Application U.S. Appl. No. 29/627,868, Adjustable Lighting Fixture, filed Nov. 30, 2017.

Gordin, Myron et al., unpublished Pending Design Application U.S. Appl. No. 29/627,873, Adjustable Lighting Fixture, filed Nov. 30, 2017.

Gordin, Myron et al., unpublished Pending Design Application U.S. Appl. No. 29/627,901, Adjustable Lighting Fixture, filed Nov. 30, 2017.

Gordin, Myron et al., unpublished Pending Non-Provisional Application U.S. Appl. No. 15/826,772, Apparatus, Method, and System for Cost-Effective Lighting System Retrofits Including LED Luminaires.

Gordin, Myron et al., unpublished Pending Non-Provisional Application U.S. Appl. No. 16/000,567, Apparatus, Method, and System for Precise LED Lighting.

* cited by examiner

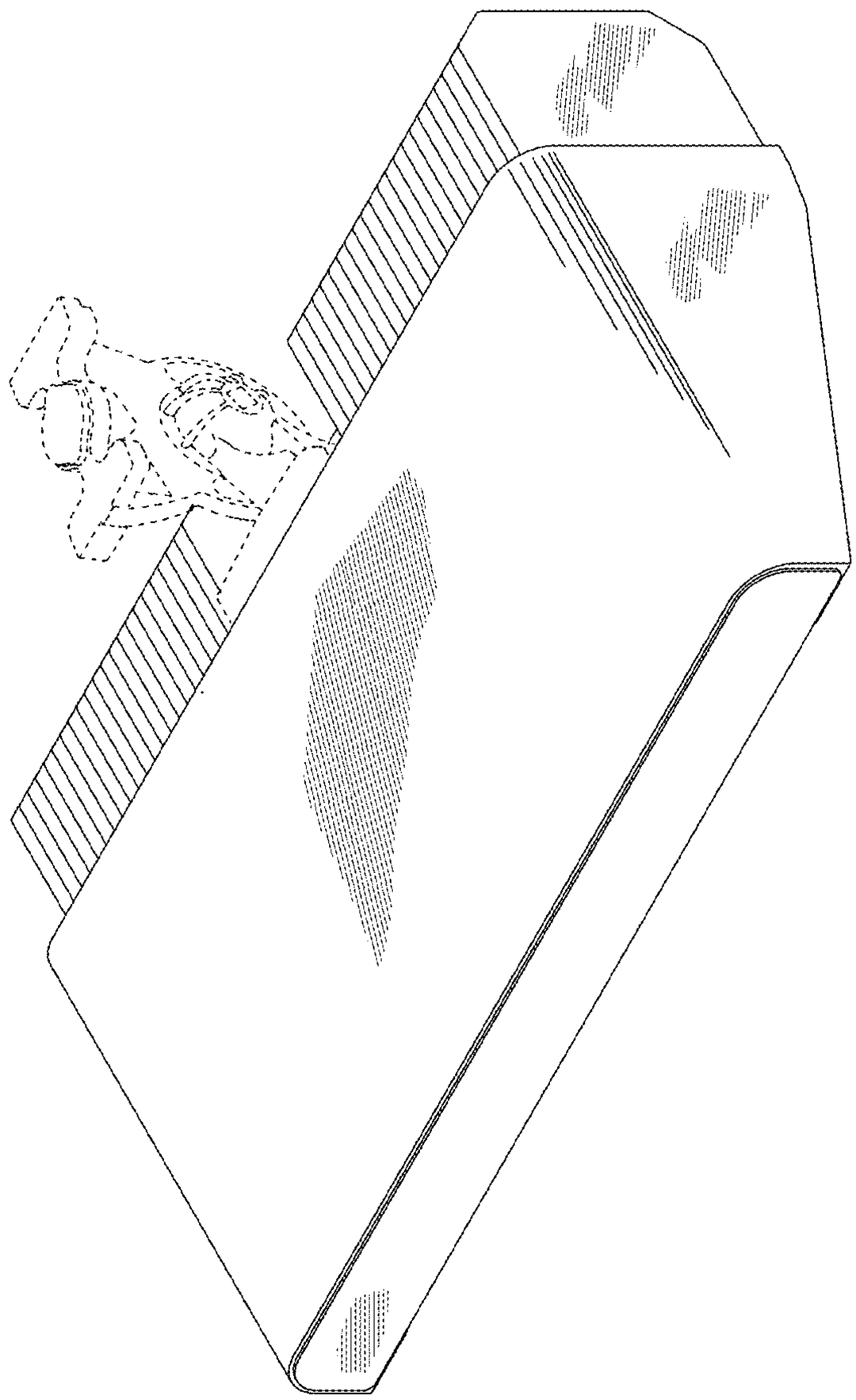

Fig 1

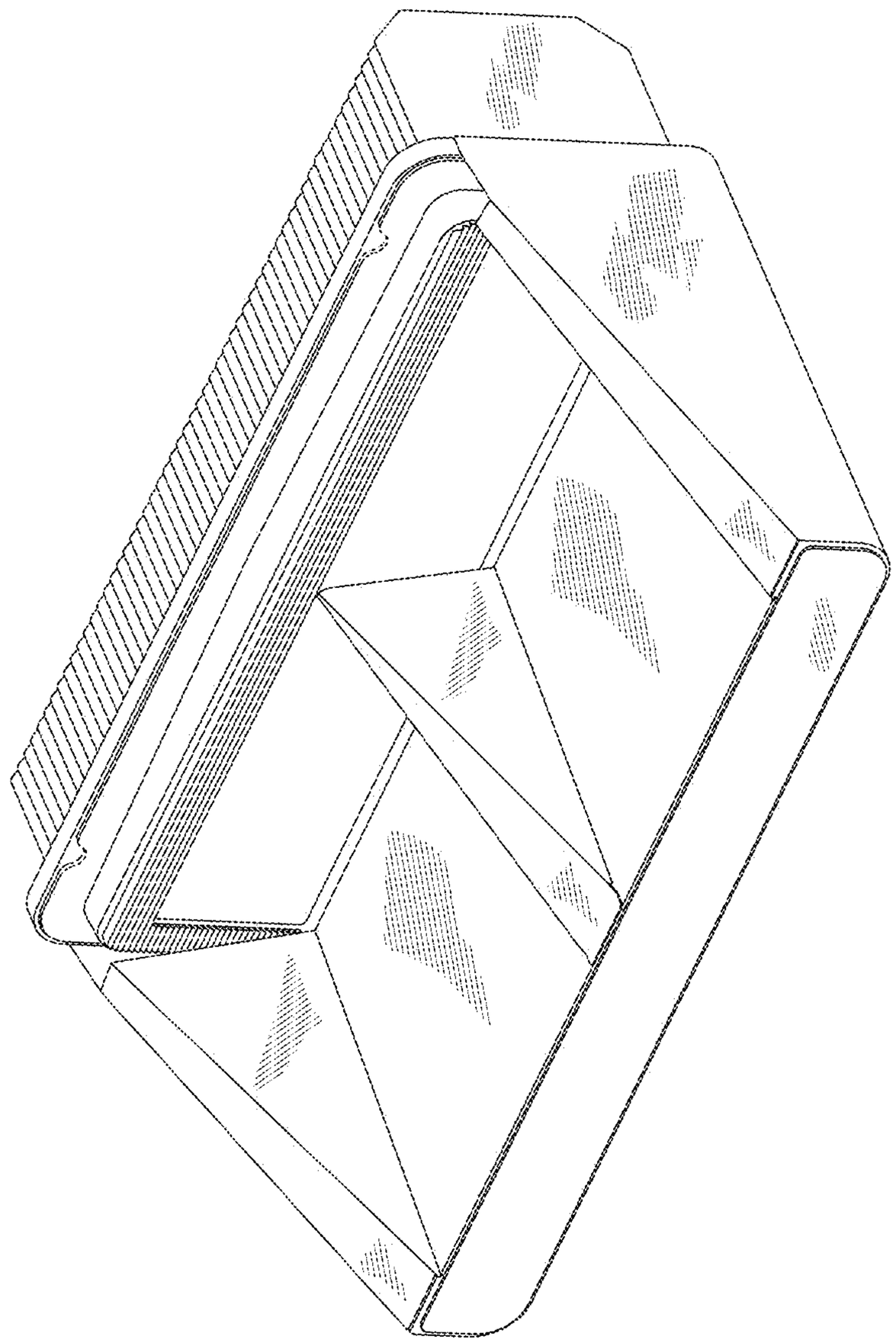

Fig 2

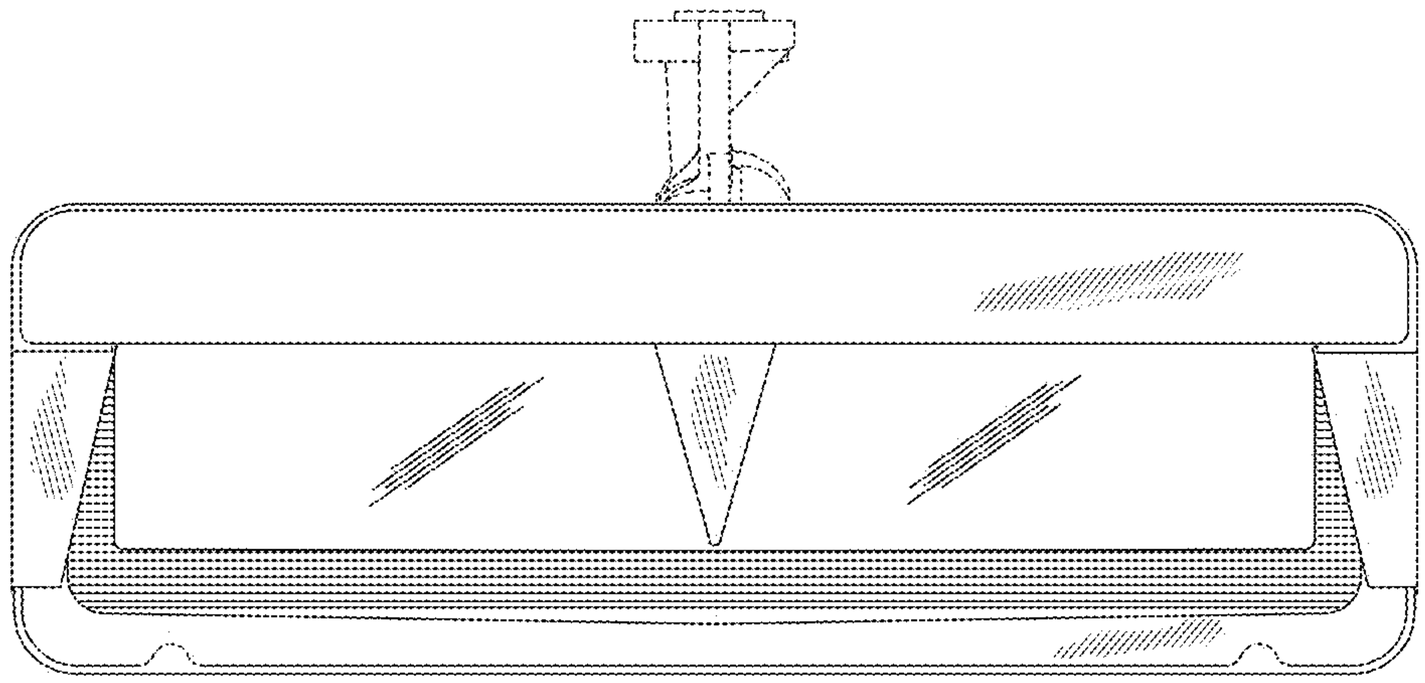

Fig 3

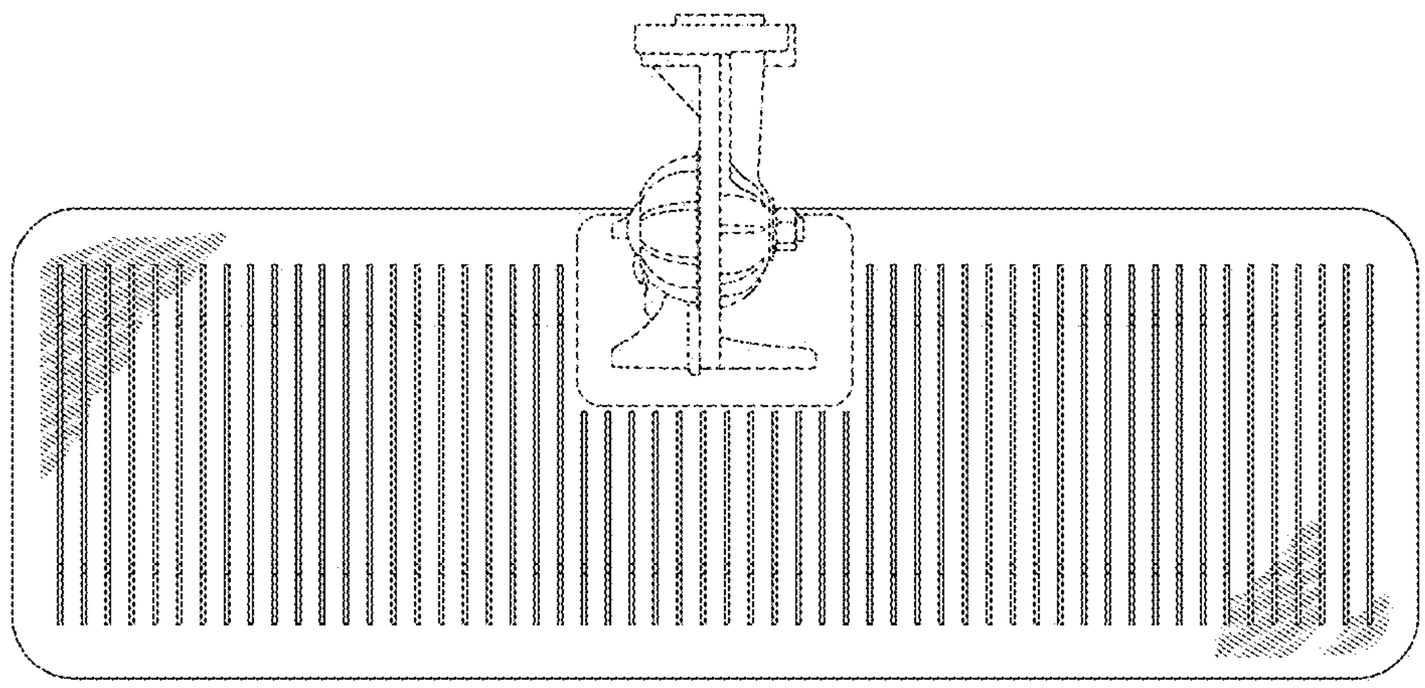

Fig 4

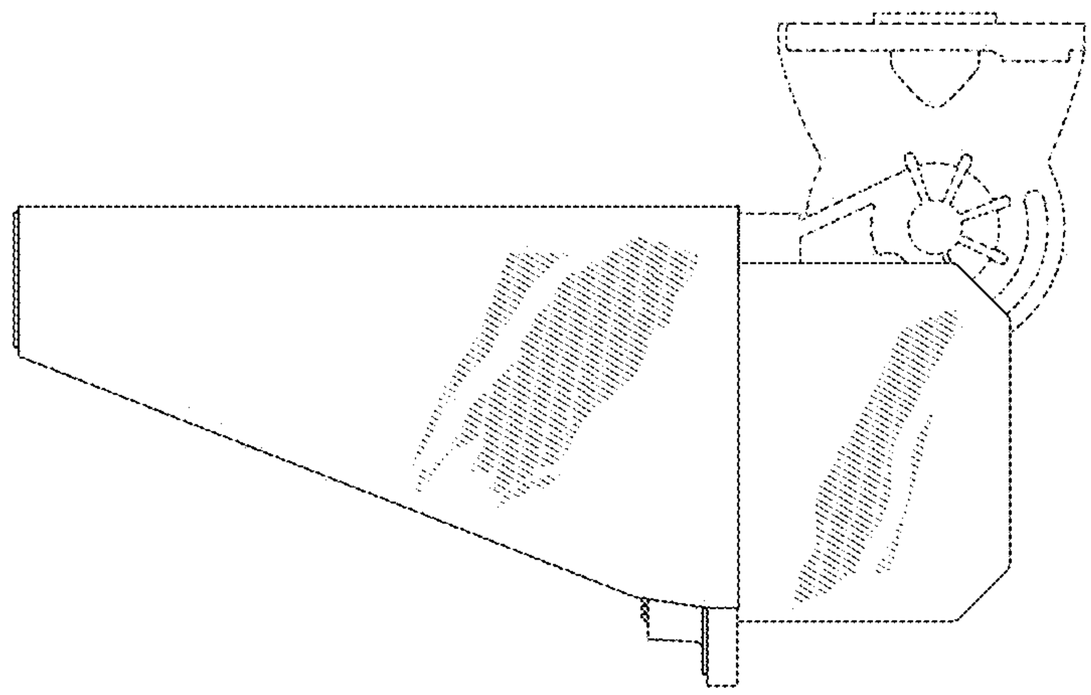

Fig 5

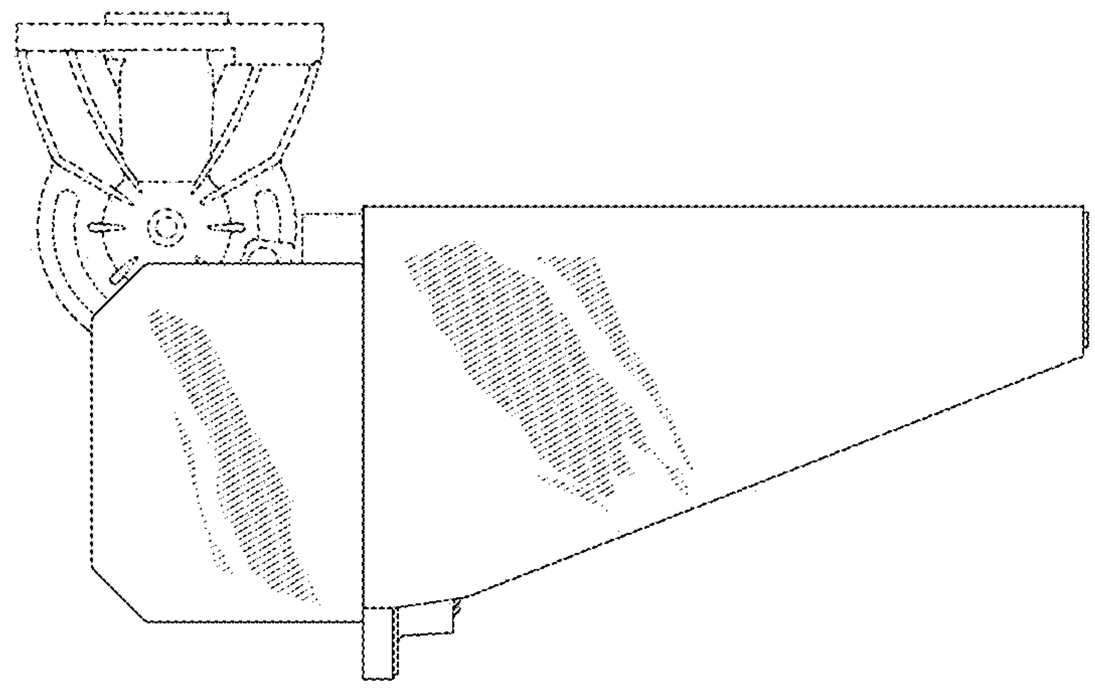

Fig 6

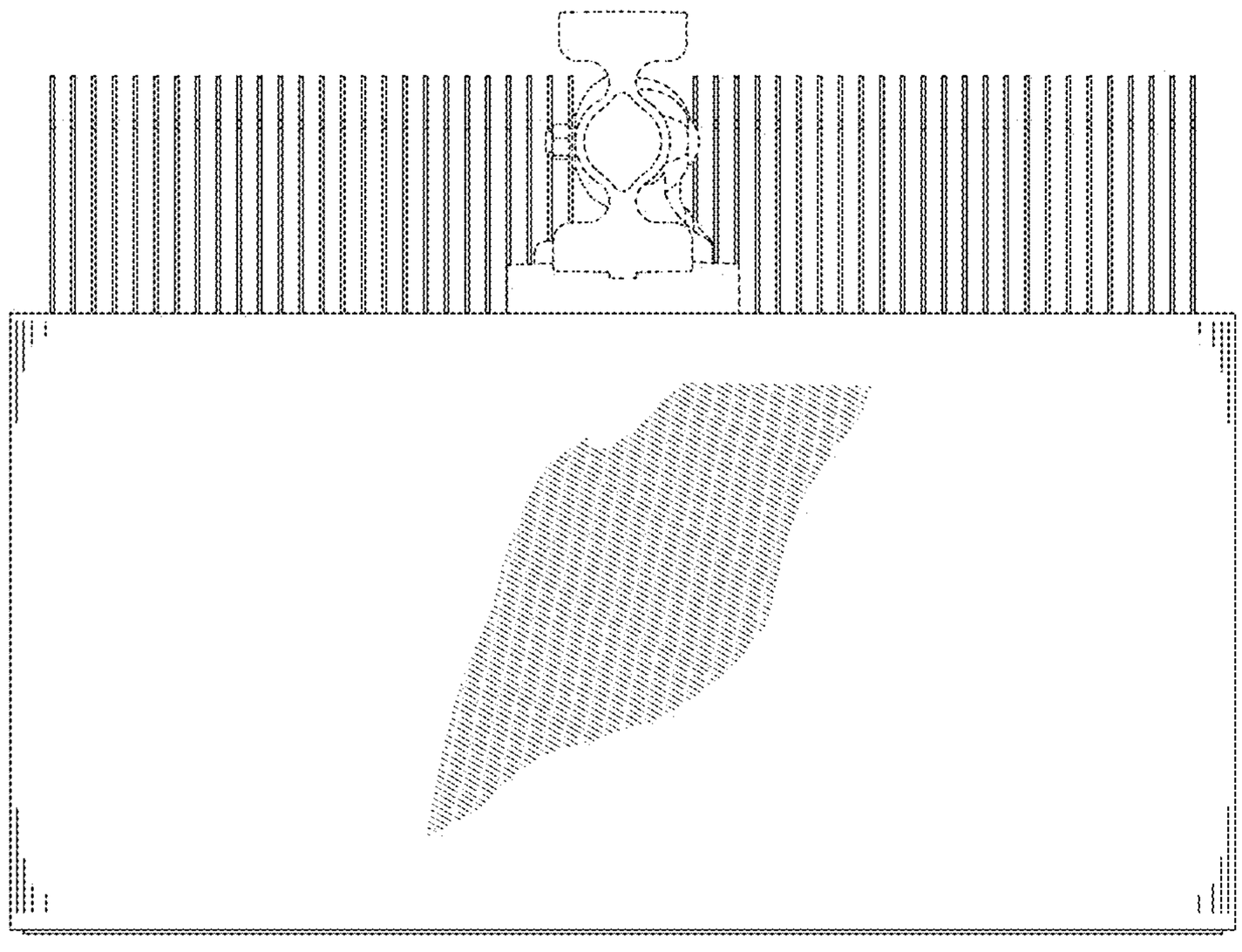

Fig 7

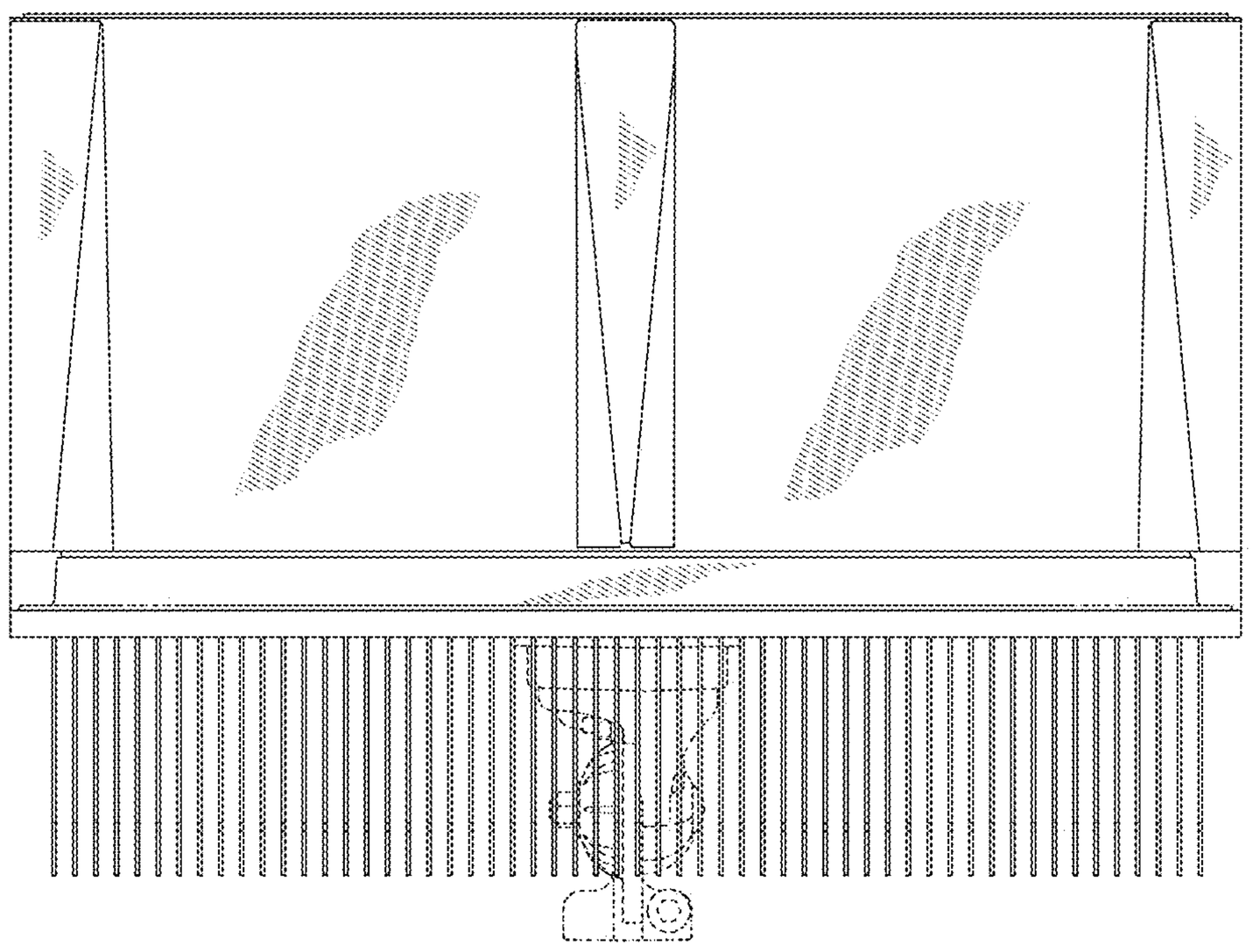

Fig 8