US00D873309S

(12) United States Design Patent

Rawls

(10) Patent No.: US D873,309 S
(45) Date of Patent: ** Jan. 21, 2020

(54) **INTERMITTENT AMMONIA ABSORPTION REFRIGERATOR CASE**

(71) Applicant: **Rocky Rawls**, Gautier, MS (US)

(72) Inventor: **Rocky Rawls**, Gautier, MS (US)

(**) Term: **15 Years**

(21) Appl. No.: **29/659,091**

(22) Filed: **Aug. 6, 2018**

(51) **LOC (12) Cl.** **15-07**

(52) **U.S. Cl.**
USPC **D15/79**

(58) **Field of Classification Search**
USPC D15/79–91; D24/121, 124
CPC F25D 17/065; F25D 23/04; F25D 23/02; F25D 23/126; F25D 2400/06; F25D 2317/061; F25D 23/028; F25D 25/025; F25D 2317/0666; F25D 29/00; F25D 11/02; F25D 11/022; F25D 2317/062; F25D 2317/067; F25D 2323/021; F25D 2400/40
See application file for complete search history.

(56) **References Cited**

U.S. PATENT DOCUMENTS

D280,293	S	*	8/1985	D'Amour	D15/79
D289,655	S	*	5/1987	Ummels	D15/79
D344,962	S	*	3/1994	Colman	D15/79
D484,150	S	*	12/2003	Becke	D15/89
D534,931	S	*	1/2007	Kirkland	D15/79
D544,287	S	*	6/2007	Joss	D15/79
D734,848	S	*	7/2015	Stonig	D24/121
D747,750	S	*	1/2016	Kim	D15/89
D773,540	S	*	12/2016	Heck	D15/89
D776,985	S	*	1/2017	Kim	D15/89
D785,056	S	*	4/2017	Lee	D15/89
D786,322	S	*	5/2017	Kim	D15/89
D790,609	S	*	6/2017	Kim	D15/89
D812,649	S	*	3/2018	Onrat	D15/89
D823,356	S	*	7/2018	Lum	D15/89
D834,073	S	*	11/2018	Adomat	D15/79

* cited by examiner

Primary Examiner — Khawaja Anwar

(57) **CLAIM**

The ornamental design for an intermittent ammonia absorption refrigerator case, as shown and described.

DESCRIPTION

FIG. **1** is a top perspective view of an intermittent ammonia absorption refrigerator case showing my new design;
FIG. **2** is a bottom perspective view thereof;
FIG. **3** is a rear perspective view thereof;
FIG. **4** is a front elevational view thereof, the rear elevational view being mirrored thereto;
FIG. **5** is a left elevational view thereof;
FIG. **6** is a right elevational view thereof;
FIG. **7** is a top plan view thereof;
FIG. **8** is a bottom plan view thereof; and,
FIG. **9** is a cross section view taken along lines **9-9** in FIG. **7**.
The evenly spaced broken lines shown in the drawings represent unclaimed portions often design and form no part of the claimed design.

1 Claim, 9 Drawing Sheets

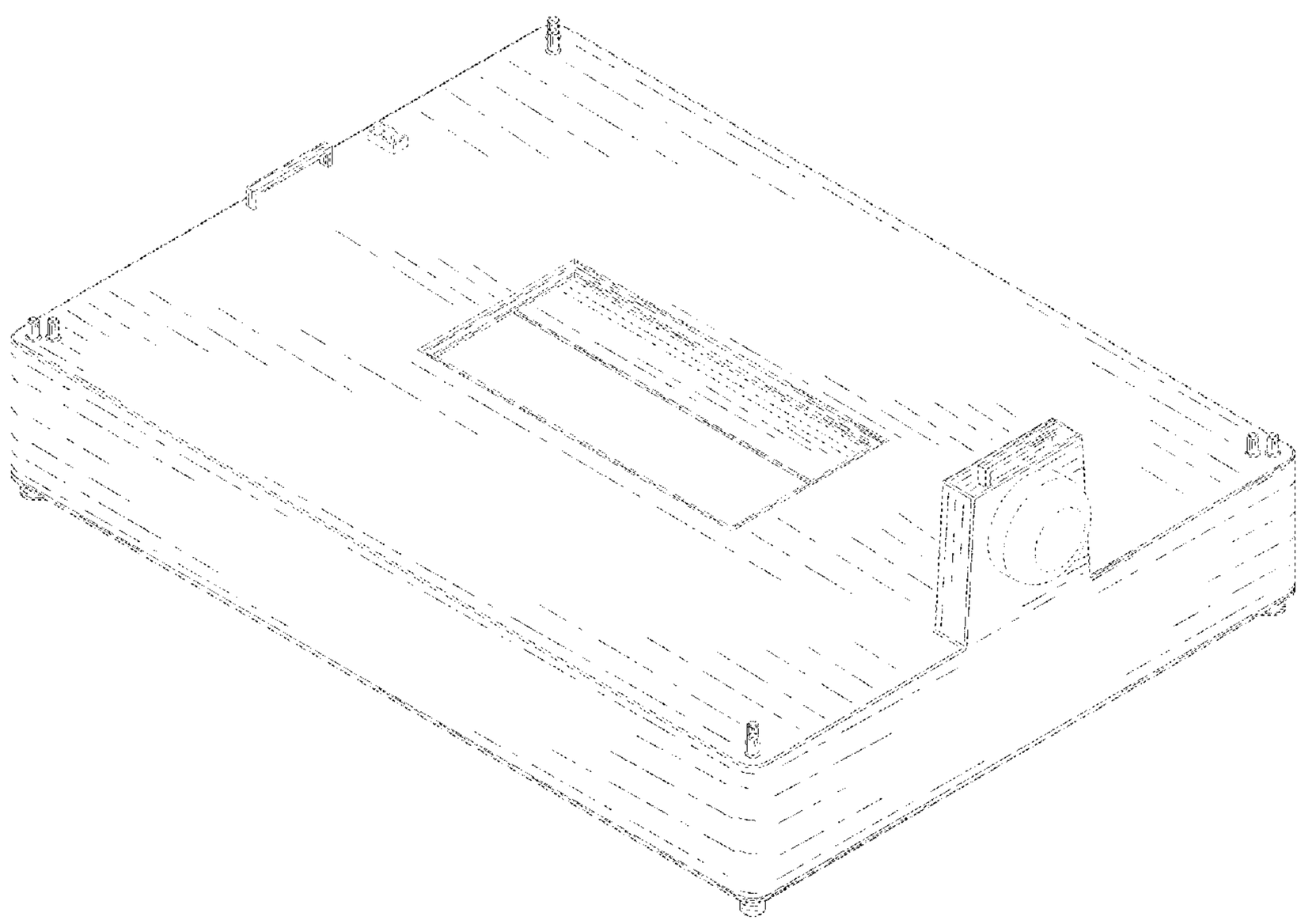

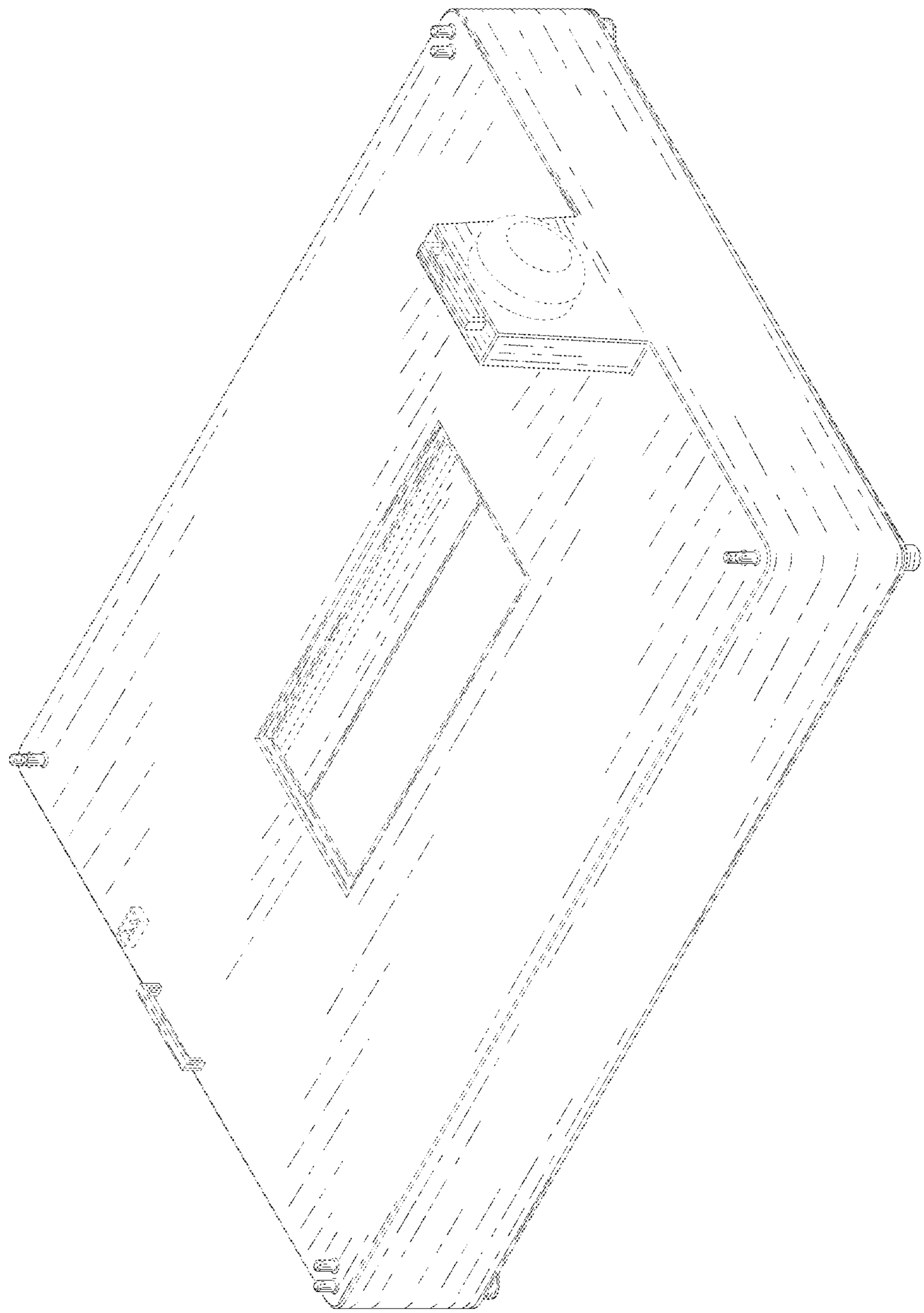

FIG. 1

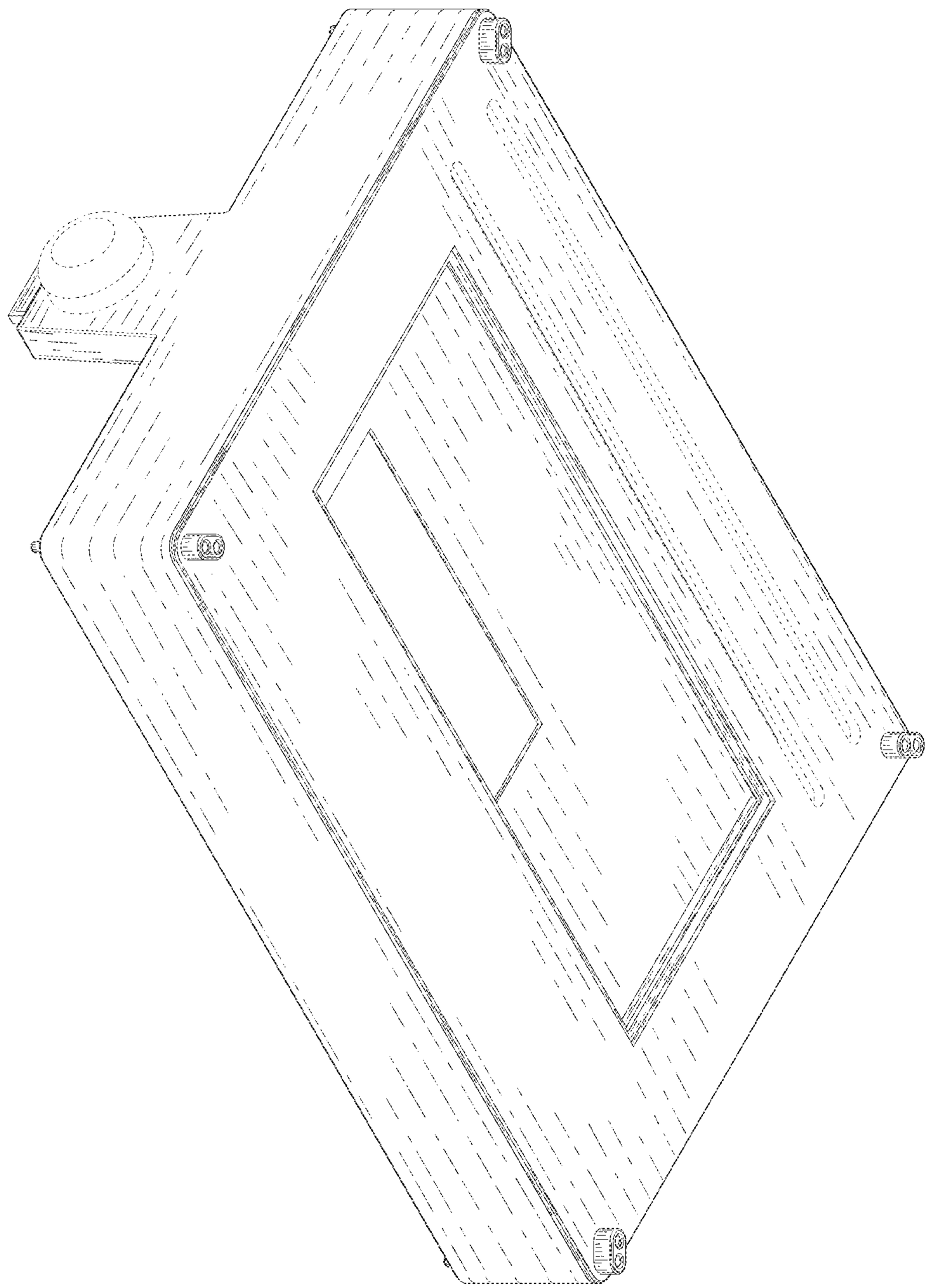

FIG. 2

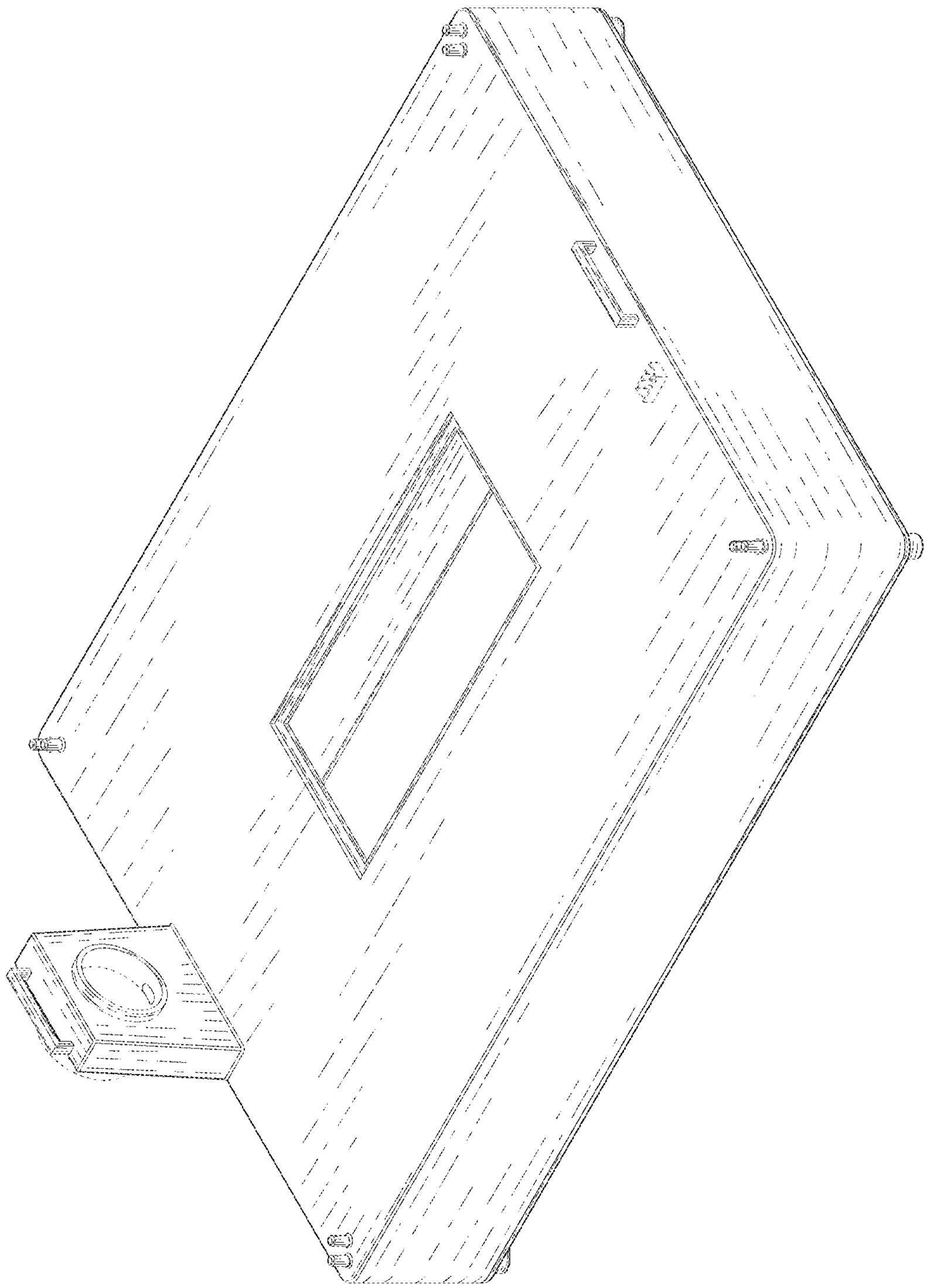

FIG. 3

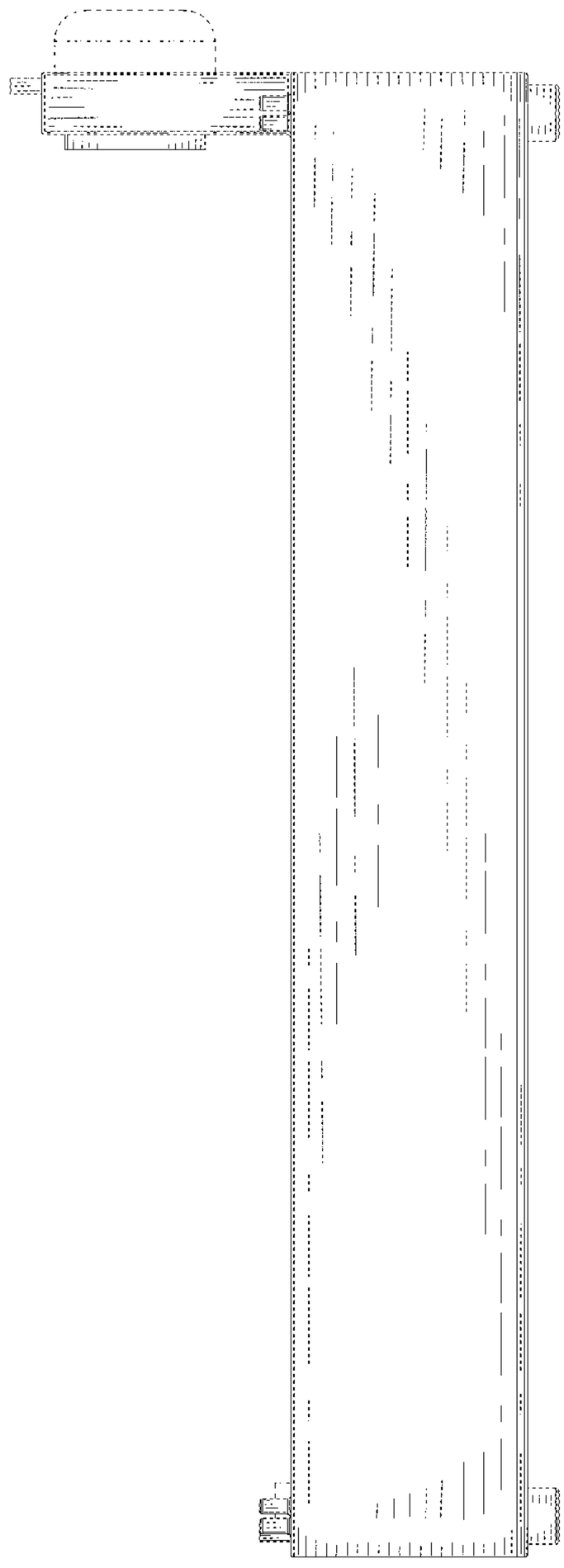

FIG. 4

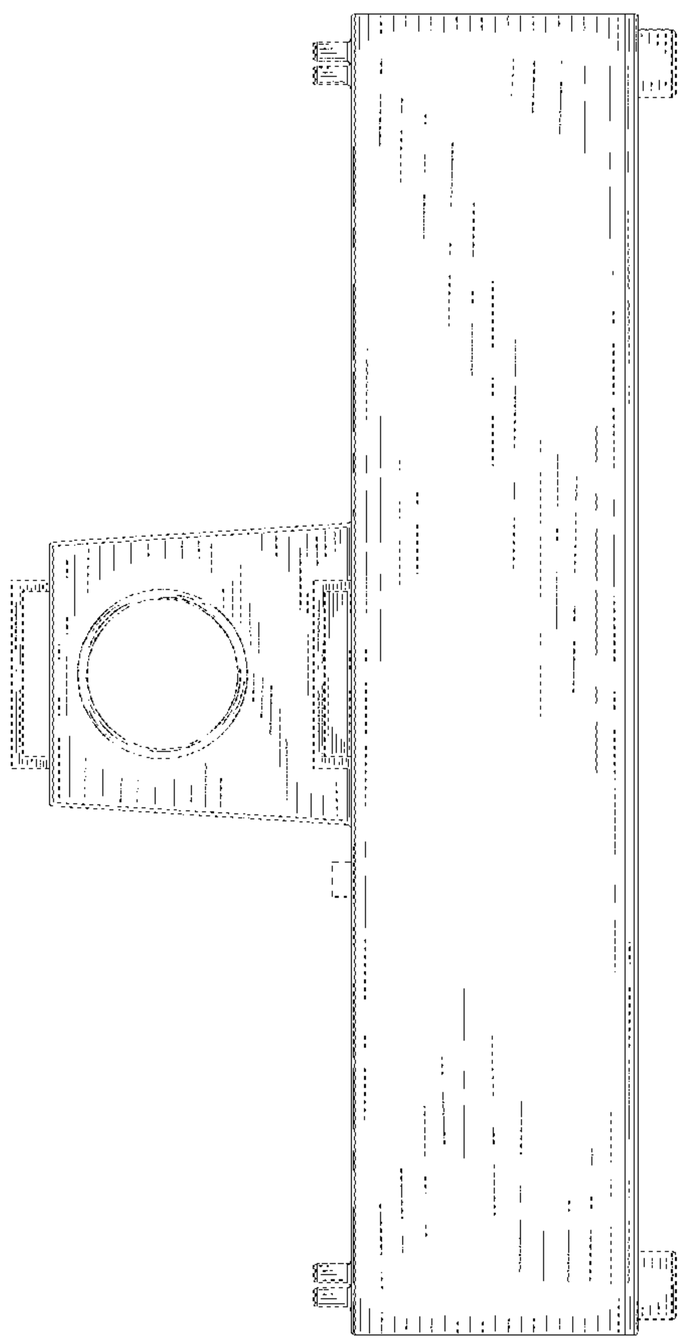

FIG. 5

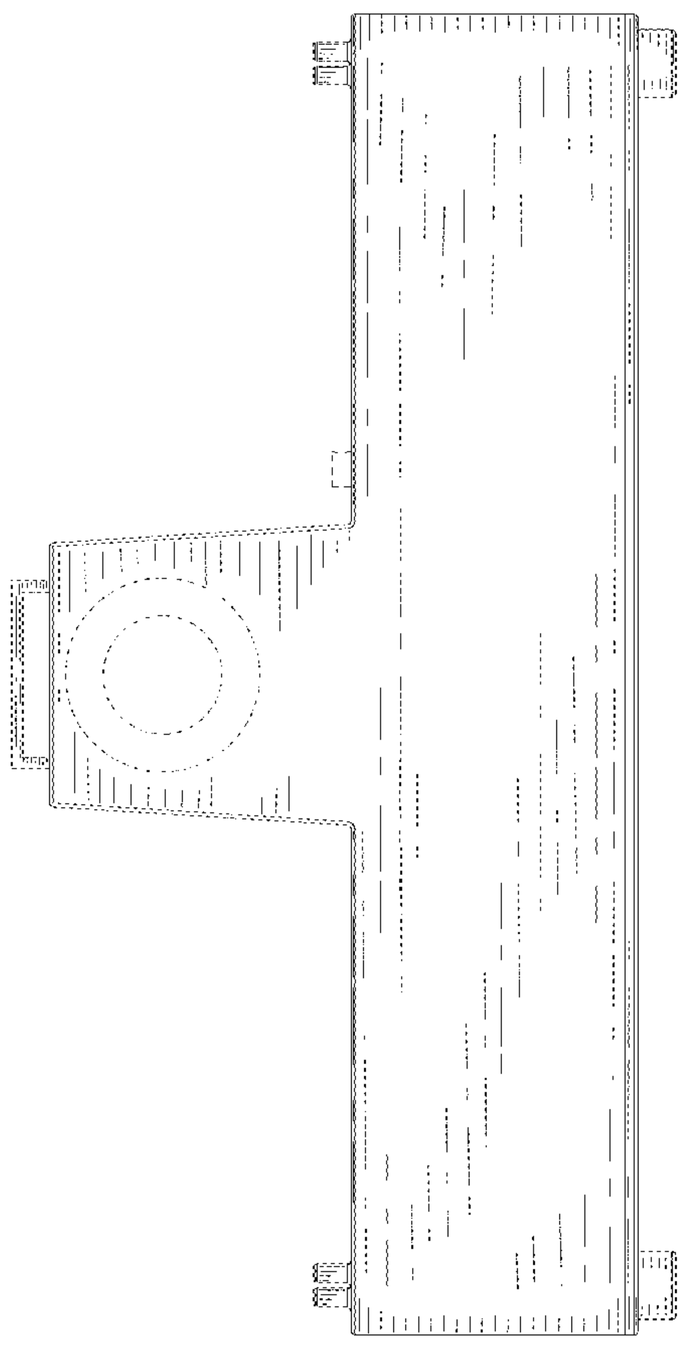

FIG. 6

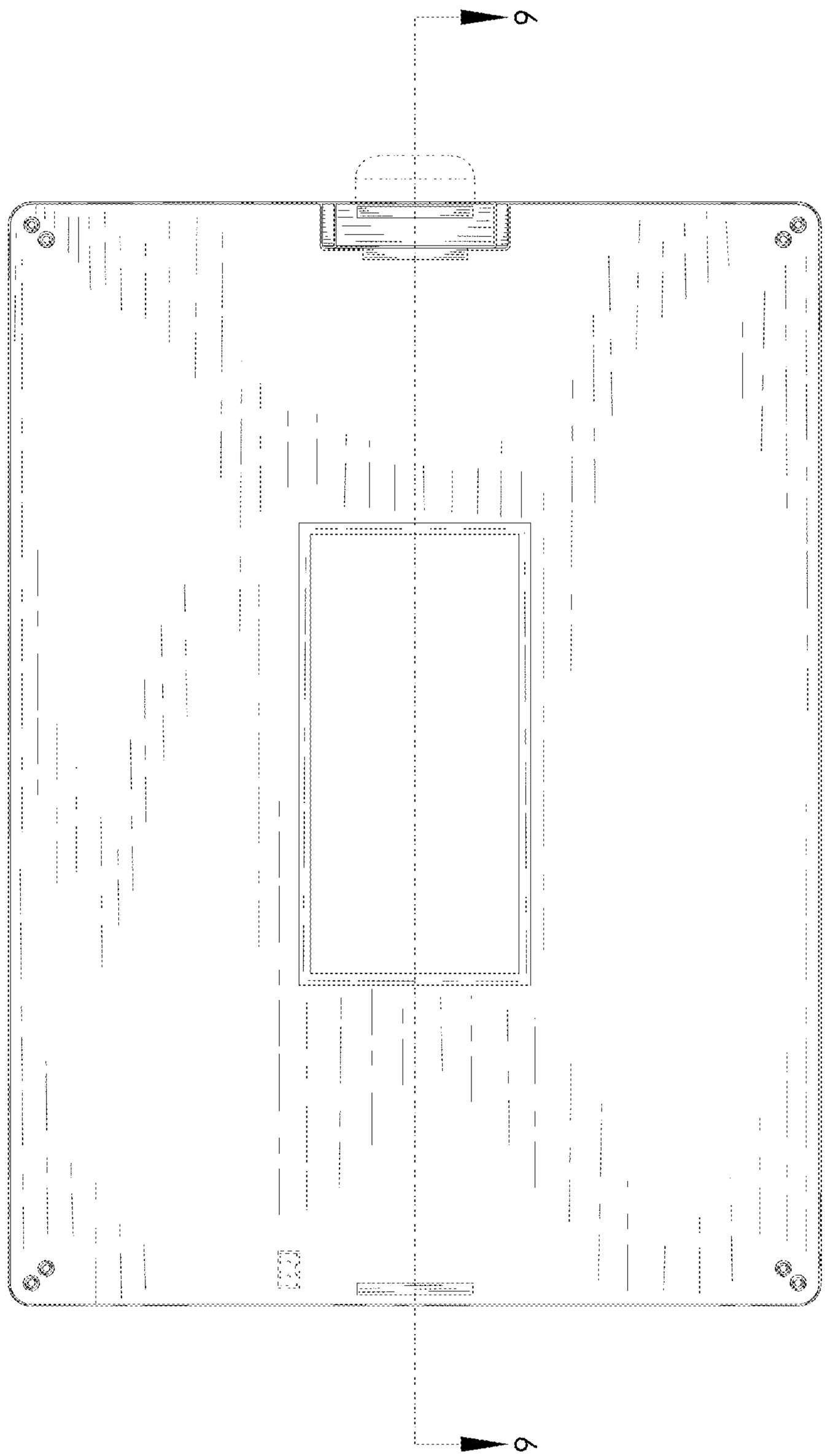

FIG. 7

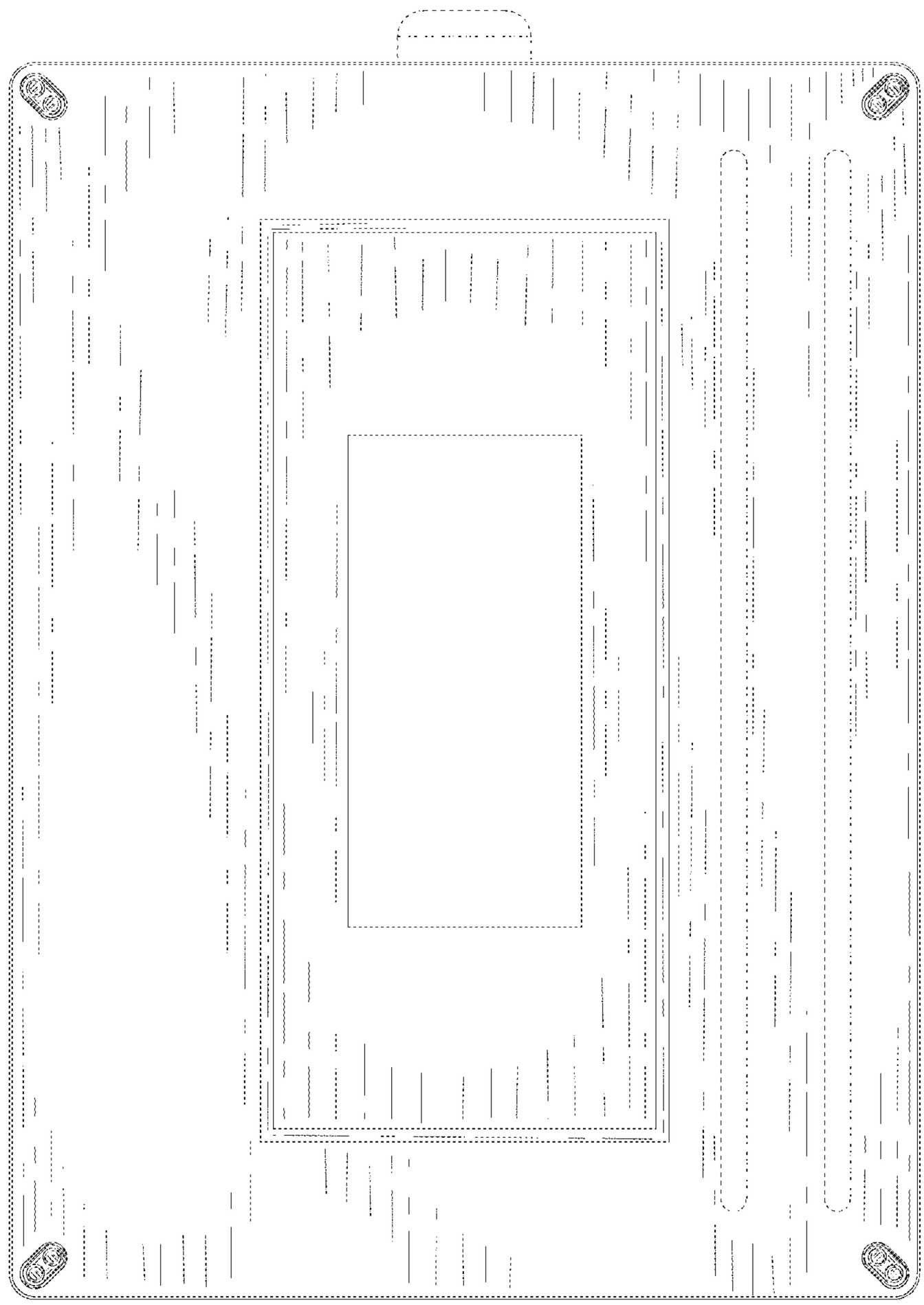

FIG. 8

FIG. 9