US00D872796S

(12) United States Design Patent

Sato et al.

(10) Patent No.: US D872,796 S
(45) Date of Patent: ** Jan. 14, 2020

(54) **COUPLING FOR PROCESS CARTRIDGE FOR IMAGE FORMING APPARATUS**

(71) Applicant: **CANON KABUSHIKI KAISHA**, Tokyo (JP)

(72) Inventors: **Masaaki Sato**, Kanagawa-ken (JP); **Yosuke Kashiide**, Tokyo (JP); **Tetsushi Uneme**, Kanagawa-ken (JP); **Kensuke Sato**, Kanagawa-ken (JP); **Toshiki Fujino**, Tokyo (JP)

(73) Assignee: **Canon Kabushiki Kaisha**, Tokyo (JP)

(**) Term: **15 Years**

(21) Appl. No.: **29/657,947**

(22) Filed: **Jul. 26, 2018**

Related U.S. Application Data

(62) Division of application No. 35/502,993, filed on Nov. 18, 2016 (U.S. filing date under 35 U.S.C. 384), and (Continued)

(30) **Foreign Application Priority Data**

May 26, 2016 (JP) 2016-011249

(51) **LOC (12) Cl.** **16-03**

(52) **U.S. Cl.**
USPC **D18/43**

(58) **Field of Classification Search**
USPC D18/36, 37, 39, 40, 41, 44, 45, 46, 47, D18/48, 49, 50, 51, 52, 53, 54, 55, 56; D14/129, 130, 301, 307, 462, 463, 464, D14/465, 466, 467, 468, 469, 470, 471
CPC B41J 3/00; B41J 3/28; B41J 3/445; B41J 3/46; B65H 11/00; B65H 11/002; B65H 2301/331; B65H 29/46; G03B 27/04; G03B 27/08; G03B 27/14; G03B 27/16; G03G 15/00; G03G 15/04; G03G 15/23; G03G 15/28; G03G 15/50; G03G 15/55; G03G 15/60; G03G 15/65; G03G 15/221; G03G 15/5075; G03G 15/6558; G03G 15/0832; G03G 15/0834; G03G 15/0836; G03G
(Continued)

(56) **References Cited**

U.S. PATENT DOCUMENTS

D462,984 S 9/2002 Hayashi et al.
D599,846 S 9/2009 Yasui et al.
(Continued)

OTHER PUBLICATIONS

Copending, unpublished Design U.S. Appl. No. 29/529,581 to Shinjiro Toba, et al., filed Jun. 9, 2015.
(Continued)

Primary Examiner — Darlington Ly
(74) *Attorney, Agent, or Firm* — Venable LLP

(57) **CLAIM**

The ornamental design for a coupling for process cartridge for image forming apparatus, as shown and described.

DESCRIPTION

FIG. **1** is a front elevation view of a coupling for process cartridge for image forming apparatus showing our new design;
FIG. **2** is a rear elevation view thereof;
FIG. **3** is a top plan view thereof;
FIG. **4** is a bottom plan view thereof;
FIG. **5** is a left side elevation view thereof;
FIG. **6** is a right side elevation view thereof;
FIG. **7** is a bottom, front, and left side perspective view thereof; and,
FIG. **8** is a top, rear, and right side perspective view thereof.

1 Claim, 8 Drawing Sheets

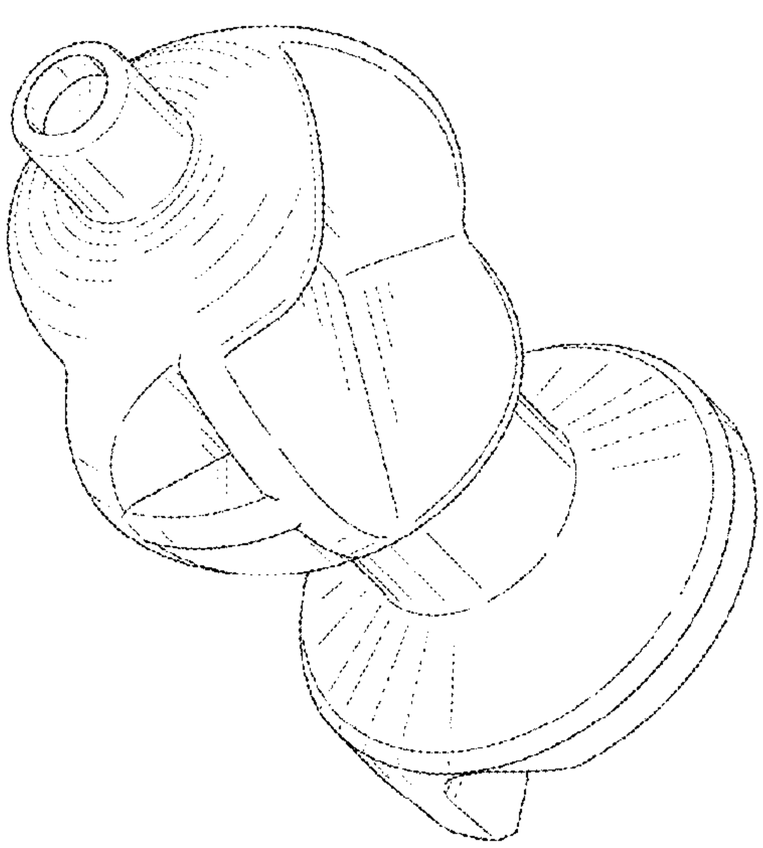

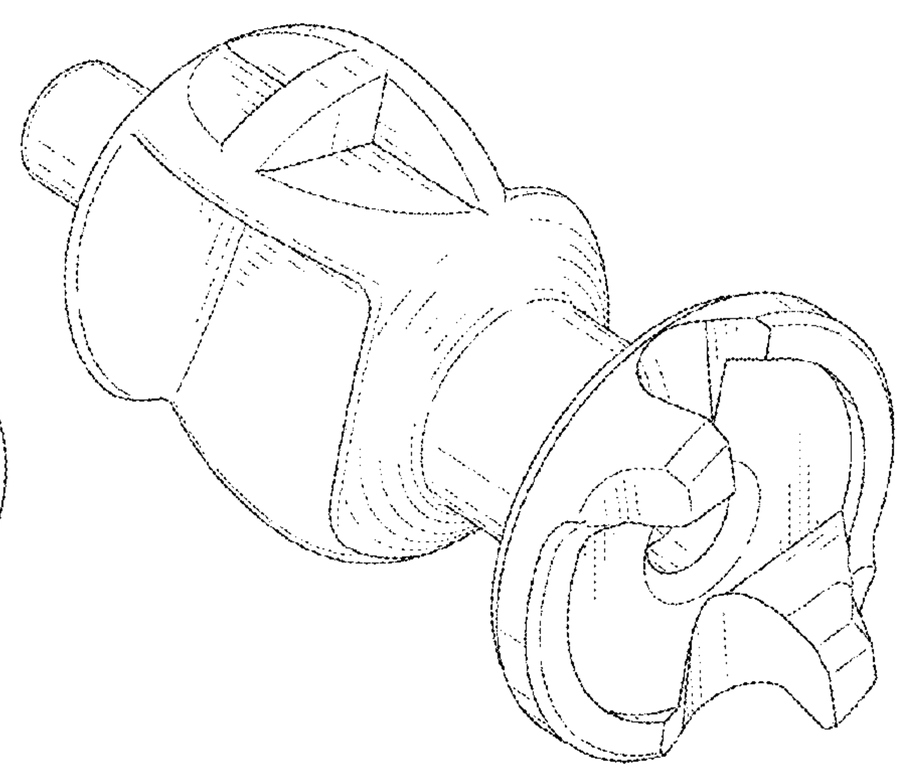

Related U.S. Application Data

having an international filing date of Nov. 18, 2016, now Pat. No. Des. 843,443.

(58) **Field of Classification Search**

CPC 15/0837; G03G 15/0877; G03G 15/0867; G03G 15/0868; G03G 15/0872; G03G 15/0898; G03G 15/5016; G03G 15/0841; G03G 21/1853; G03G 21/20; G03G 21/18; G03G 21/08; G03G 21/16; G03G 2221/1654; G03G 2221/183; G03G 2221/1684; G03G 2221/1645; G03F 7/70716; G06K 15/12; G06K 15/14; H04N 1/00204; H04N 1/00249; H04N 1/00278; H04N 1/00602; H04N 1/00631

See application file for complete search history.

(56) **References Cited**

U.S. PATENT DOCUMENTS

D631,088 S 1/2011 Chadani et al.
D631,089 S 1/2011 Chadani et al.
D631,090 S 1/2011 Chadani et al.
D631,091 S 1/2011 Chadani et al.
D633,137 S 2/2011 Chadani et al.
D636,813 S * 4/2011 Kikuchi D18/43
D638,056 S 5/2011 Kanno et al.
D638,057 S 5/2011 Kanno et al.
7,941,072 B2 * 5/2011 Ishikawa G03G 15/0875 399/107
D639,335 S 6/2011 Kanno et al.
D639,846 S 6/2011 Kanno et al.
D677,718 S * 3/2013 Huck F16D 1/101 D18/43
D689,129 S * 9/2013 Okino D18/43
D696,342 S * 12/2013 Lewis G03G 15/757 D18/43
D698,861 S * 2/2014 Huang D18/43
D699,281 S * 2/2014 Kurokawa D18/43
D699,282 S * 2/2014 Kurokawa D18/43
D706,340 S * 6/2014 Lee D18/43
D723,613 S * 3/2015 Shimizu D18/43
D724,657 S * 3/2015 Shimizu D18/43
D732,107 S * 6/2015 Huang D18/43
D739,890 S * 9/2015 Ogawa D18/43
D739,891 S * 9/2015 Ogawa D18/43
D752,136 S * 3/2016 Koido D18/43
D786,962 S 5/2017 Toba et al.
D786,968 S 5/2017 Uratani et al.
D791,224 S 7/2017 Toba et al.
D791,862 S 7/2017 Toba et al.
D796,574 S * 9/2017 Kamoshida D18/43
D798,948 S 10/2017 Toba et al.
D798,949 S 10/2017 Toba et al.
D807,955 S 1/2018 Toba et al.
2003/0223782 A1 * 12/2003 Ban G03G 15/0872 399/227

OTHER PUBLICATIONS

Copending, unpublished Design U.S. Appl. No. 29/546,566 to Shinjiro Toba, et al., filed Nov. 24, 2015.
Copending, unpublished Design U.S. Appl. No. 29/586,991 to Shinjiro Toba, et al., filed Dec. 8, 2016.
Copending, unpublished Design U.S. Appl. No. 29/546,569 to Shinjiro Toba, et al., filed Nov. 24, 2015.
Copending, unpublished Design U.S. Appl. No. 29/552,153 to Shunsuke Uratani, et al., filed Jan. 20, 2016.
Copending, unpublished Design U.S. Appl. No. 29/552,142 to Shunsuke Uratani, et al., filed Jan. 20, 2016.
Copending, unpublished Design U.S. Appl. No. 29/552,140 to Shigemi Kamoshida, et al., filed Jan. 20, 2016.

* cited by examiner

Fig. 1

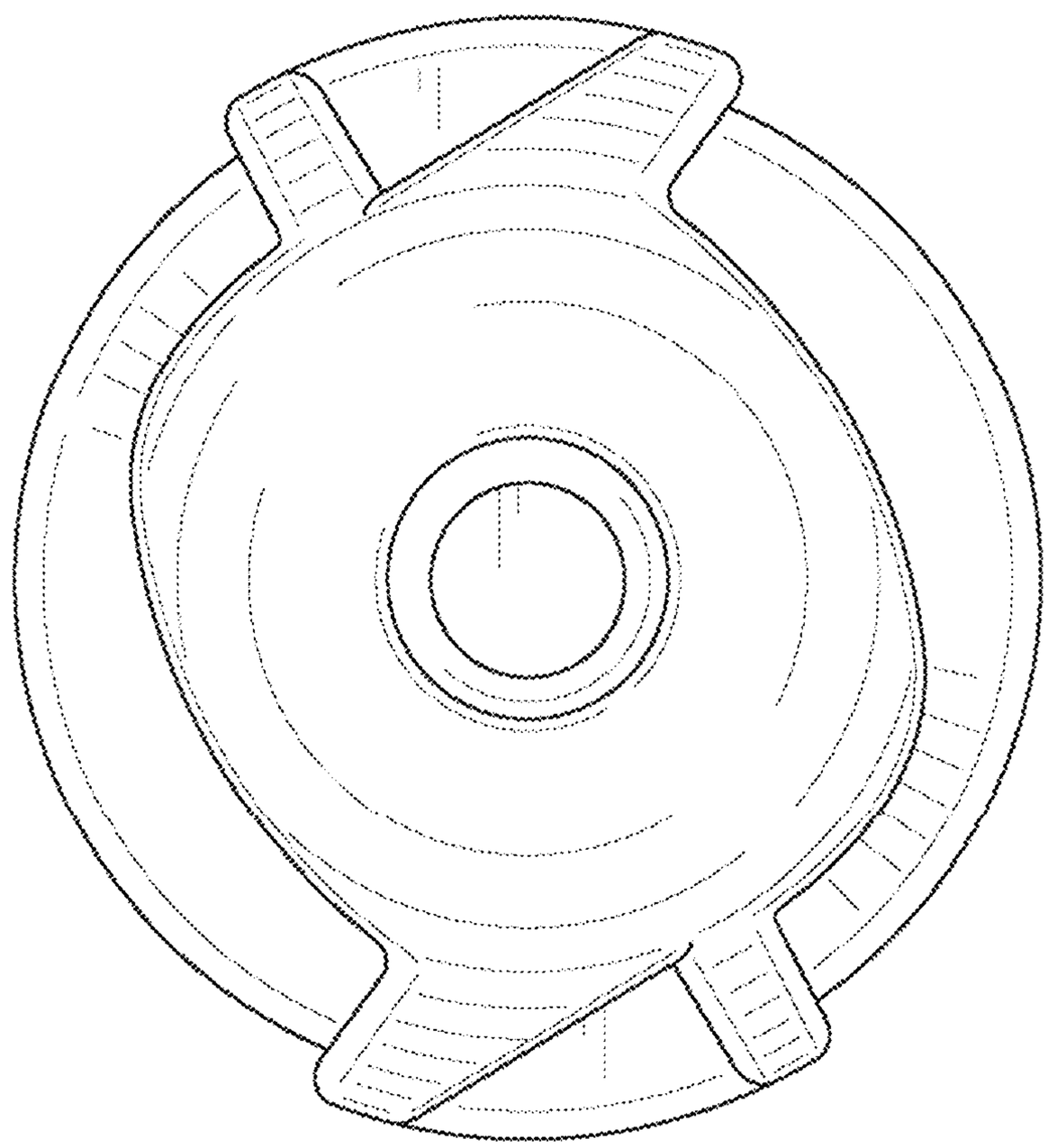

Fig. 2

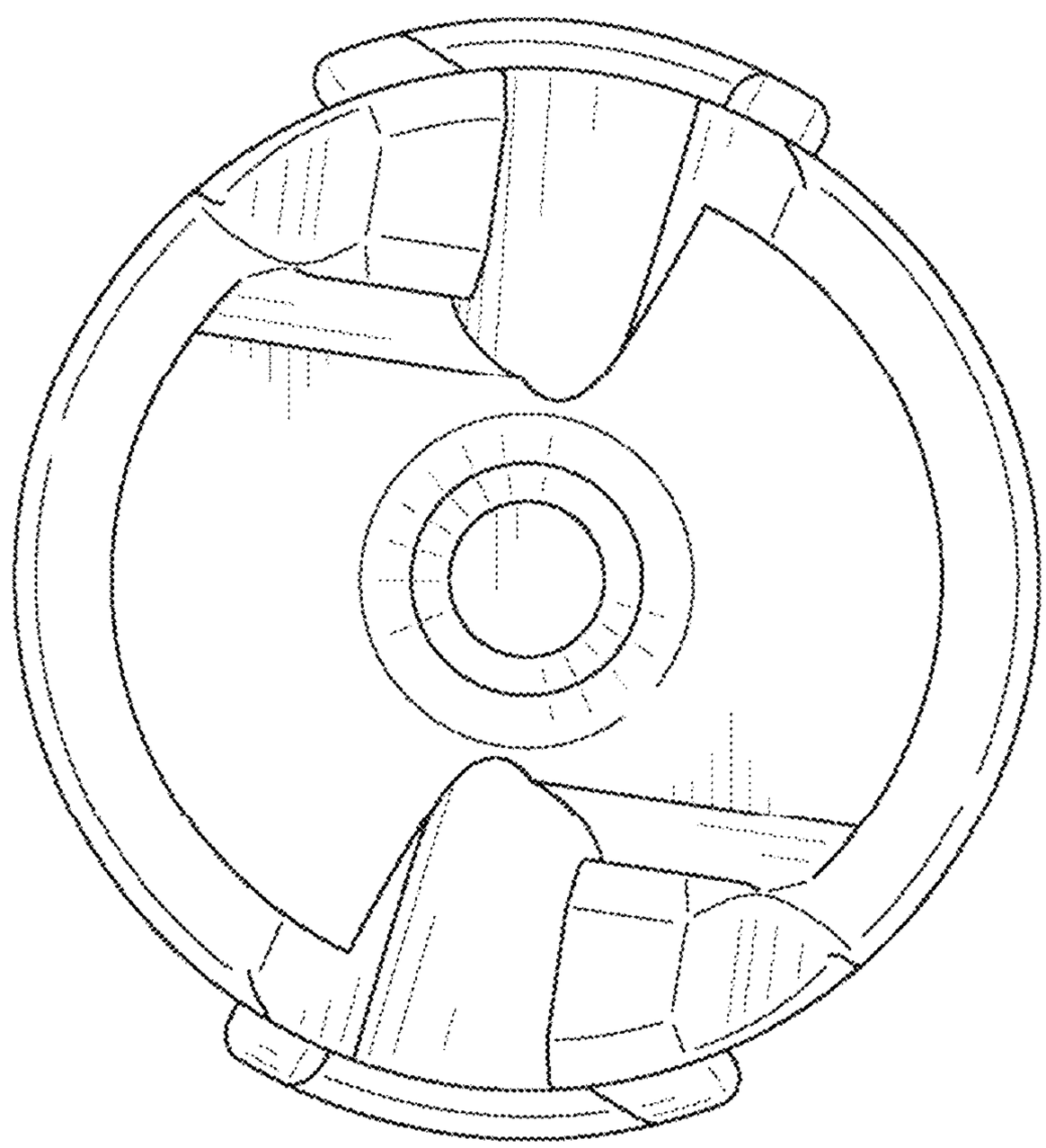

Fig. 3

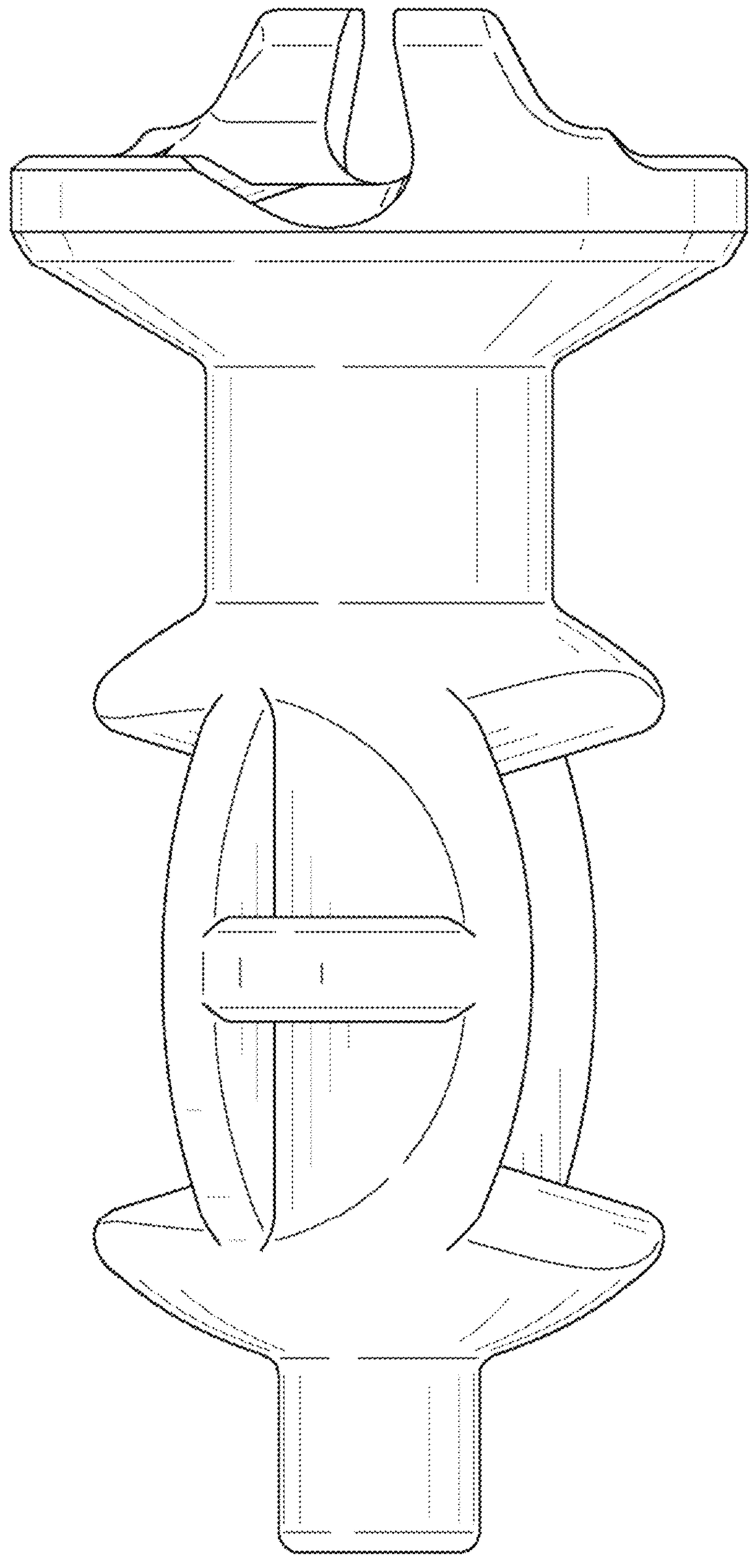

Fig. 4

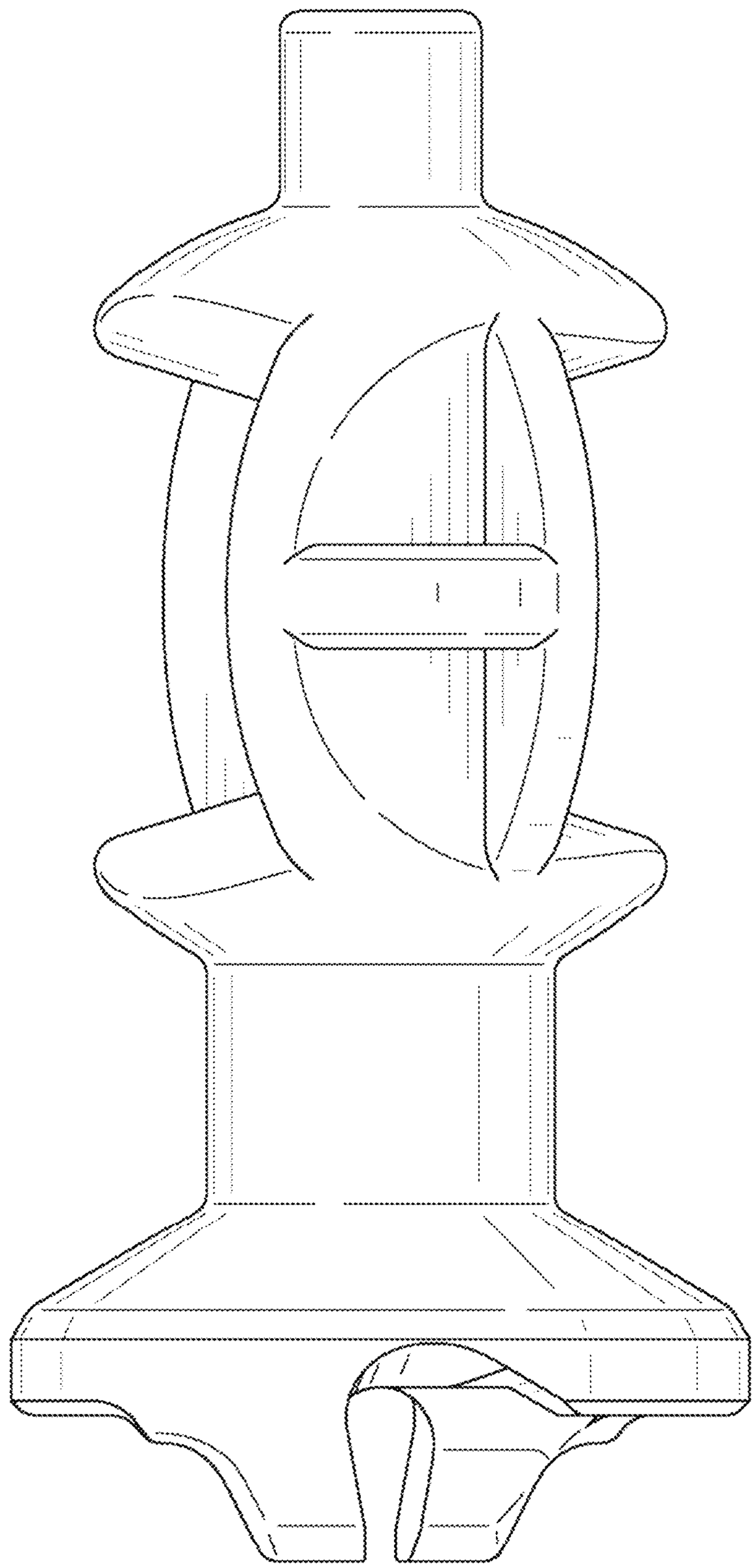

Fig. 5

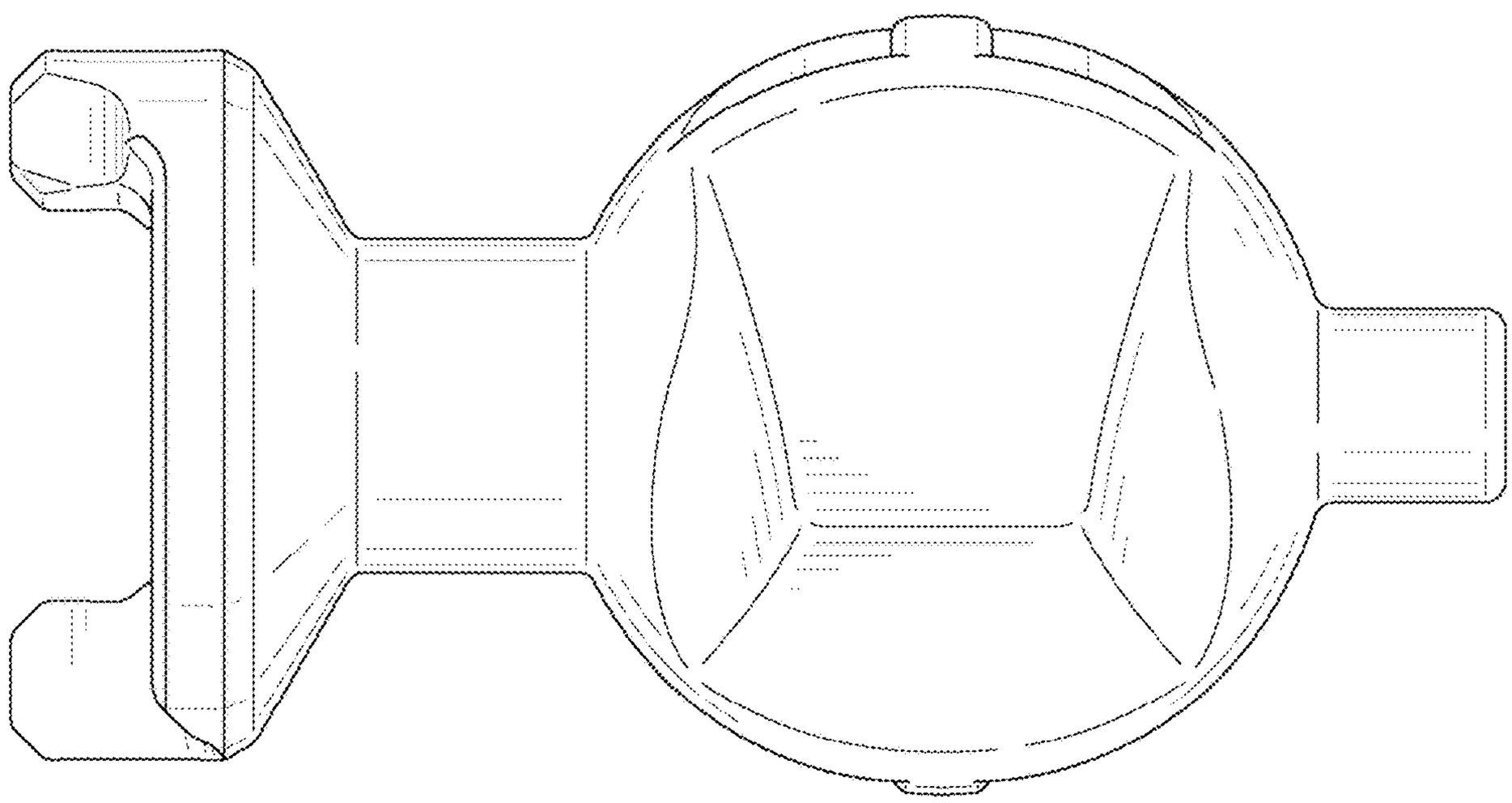

Fig. 6

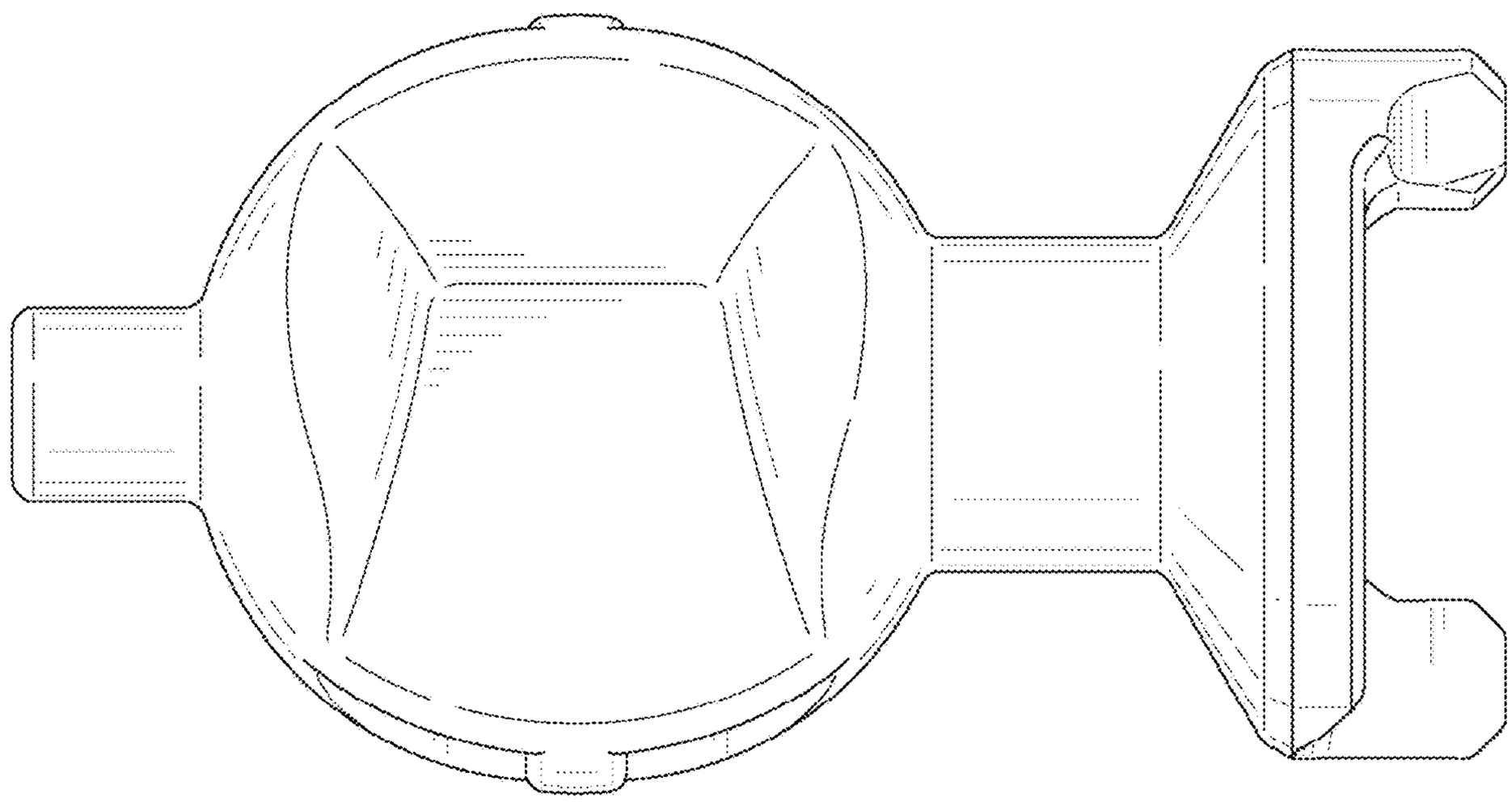

Fig. 7
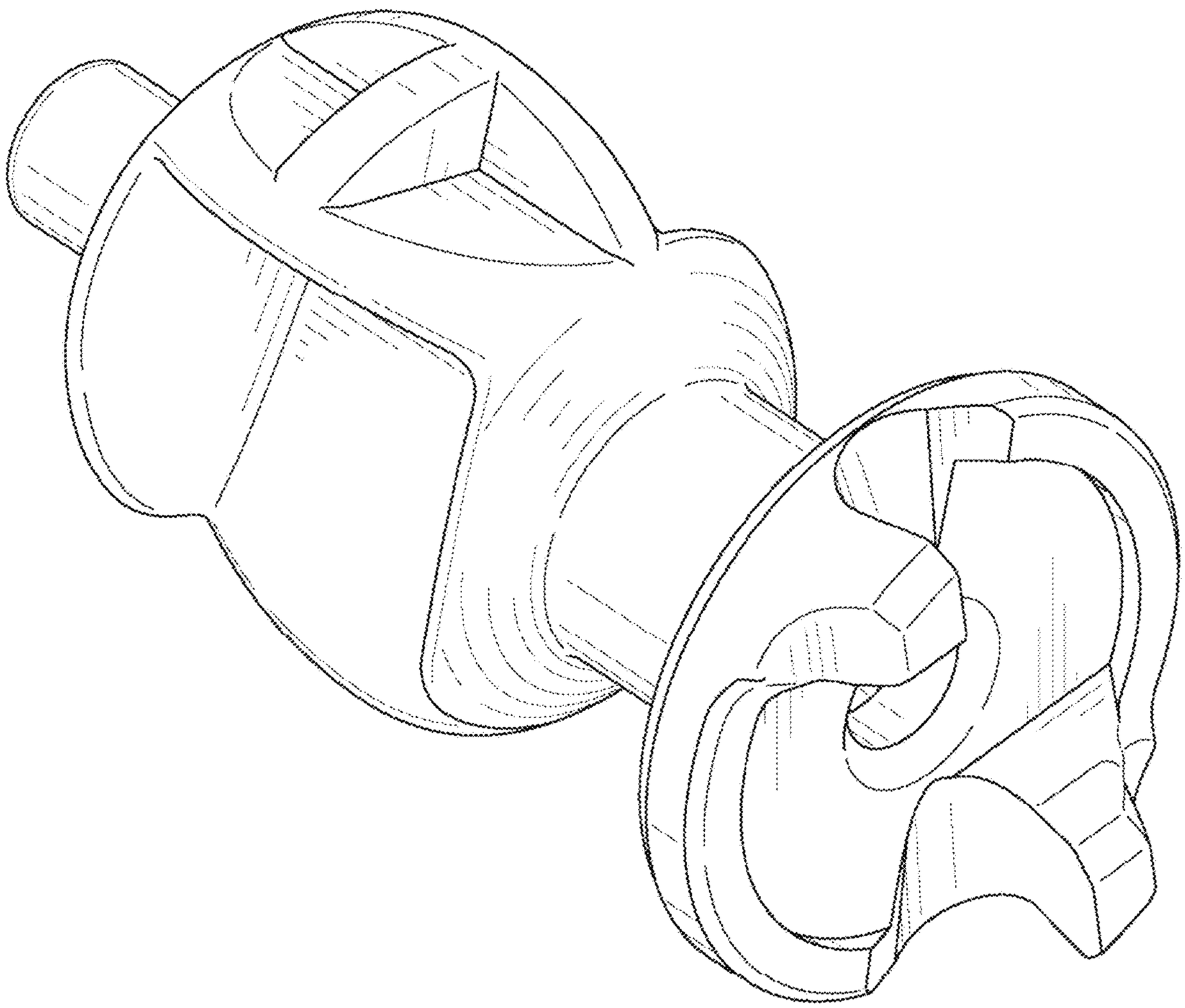
Fig. 8