US00D870678S

(12) United States Design Patent
Lin

(10) Patent No.: US D870,678 S
(45) Date of Patent: ** Dec. 24, 2019

(54) **CONTROL PANEL FOR POWER SUPPLY**

(71) Applicant: **CHYNG HONG ELECTRONIC CO., LTD.**, Taichung (TW)

(72) Inventor: **Mu-Chun Lin**, Taichung (TW)

(73) Assignee: **CHYNG HONG ELECTRONIC CO., LTD.**, Taichung (TW)

(**) Term: **15 Years**

(21) Appl. No.: **29/660,498**

(22) Filed: **Aug. 21, 2018**

(51) **LOC (12) Cl.** **13-03**

(52) **U.S. Cl.**
USPC **D13/162**; D13/177

(58) **Field of Classification Search**
USPC D13/162, 164, 177, 184; D14/188, 240, D14/257, 313, 441, 445
CPC H01H 13/83; H02G 3/14; H05K 7/0217; H05K 7/432
See application file for complete search history.

(56) **References Cited**

U.S. PATENT DOCUMENTS

8,410,362 B1 * 4/2013 Lin H02G 3/14 174/66
D735,149 S * 7/2015 Lin D13/177
D770,396 S * 11/2016 Lin D13/177
D771,577 S * 11/2016 Lin D13/177
D782,417 S * 3/2017 Lin D13/118
D782,424 S * 3/2017 Lin D13/177
9,674,973 B1 * 6/2017 Lin G06F 1/188
9,681,564 B2 * 6/2017 Lin H05K 7/20127
D815,608 S * 4/2018 Lin D13/177
10,062,491 B1 * 8/2018 Lin H01F 27/025
10,063,038 B1 * 8/2018 Lin H02B 1/26
10,123,442 B1 * 11/2018 Lin H05K 7/1432
10,143,117 B2 * 11/2018 Lin H05K 7/20909
10,264,709 B1 * 4/2019 Lin H05K 7/2039
10,383,245 B1 * 8/2019 Lin H05K 5/0247

* cited by examiner

Primary Examiner — Selina Sikder
(74) *Attorney, Agent, or Firm* — Sinorica, LLC

(57) **CLAIM**

I claim the ornamental design for a control panel for power supply, as shown and described.

DESCRIPTION

FIG. **1** is a front perspective view of a control panel for power supply showing my new design;
FIG. **2** is a front elevational view thereof;
FIG. **3** is a rear elevational view thereof.
FIG. **4** is a left side elevational view thereof;
FIG. **5** is a right side elevational view thereof;
FIG. **6** is a top plan view thereof; and,
FIG. **7** is a bottom plan view thereof.

1 Claim, 6 Drawing Sheets

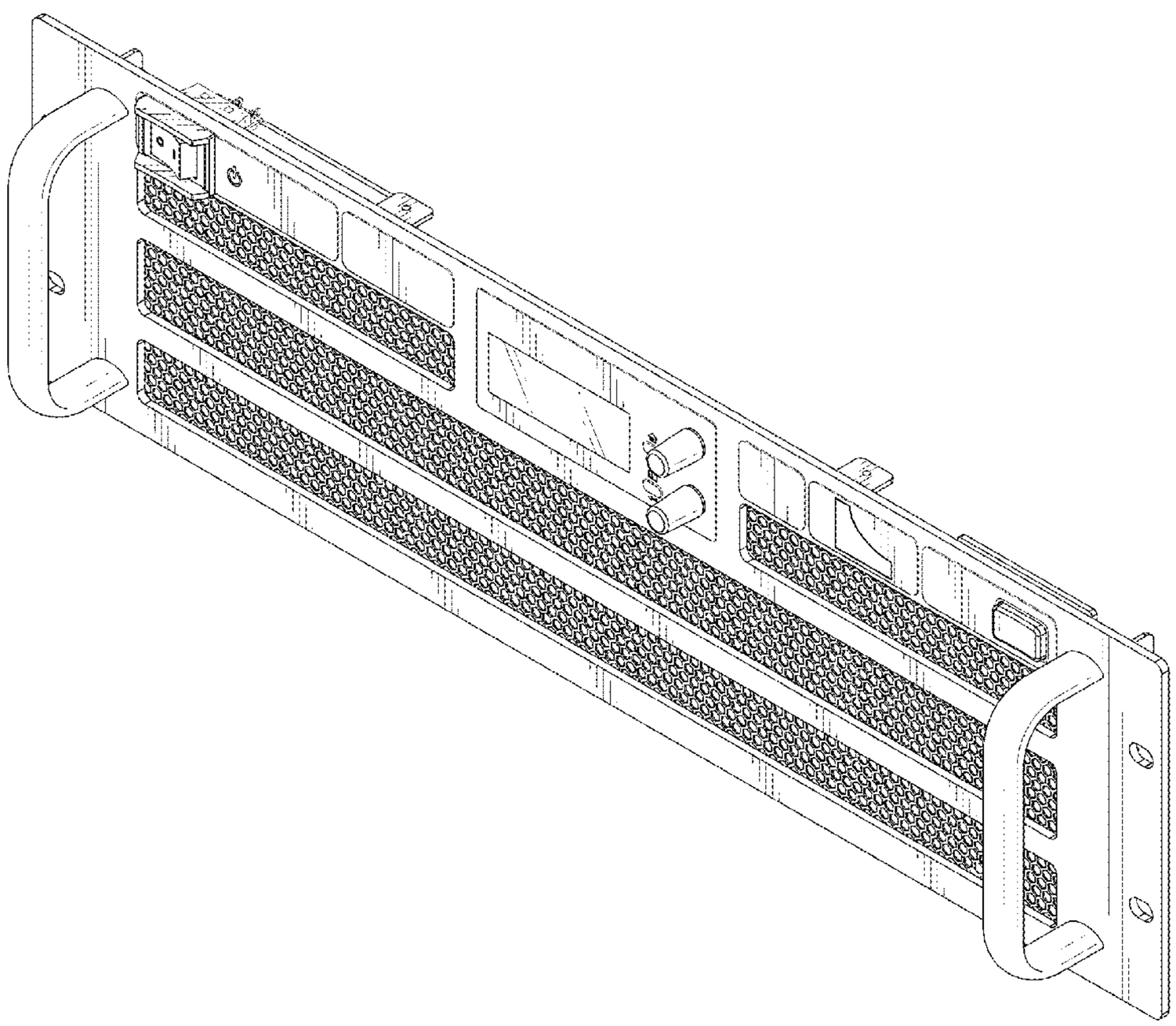

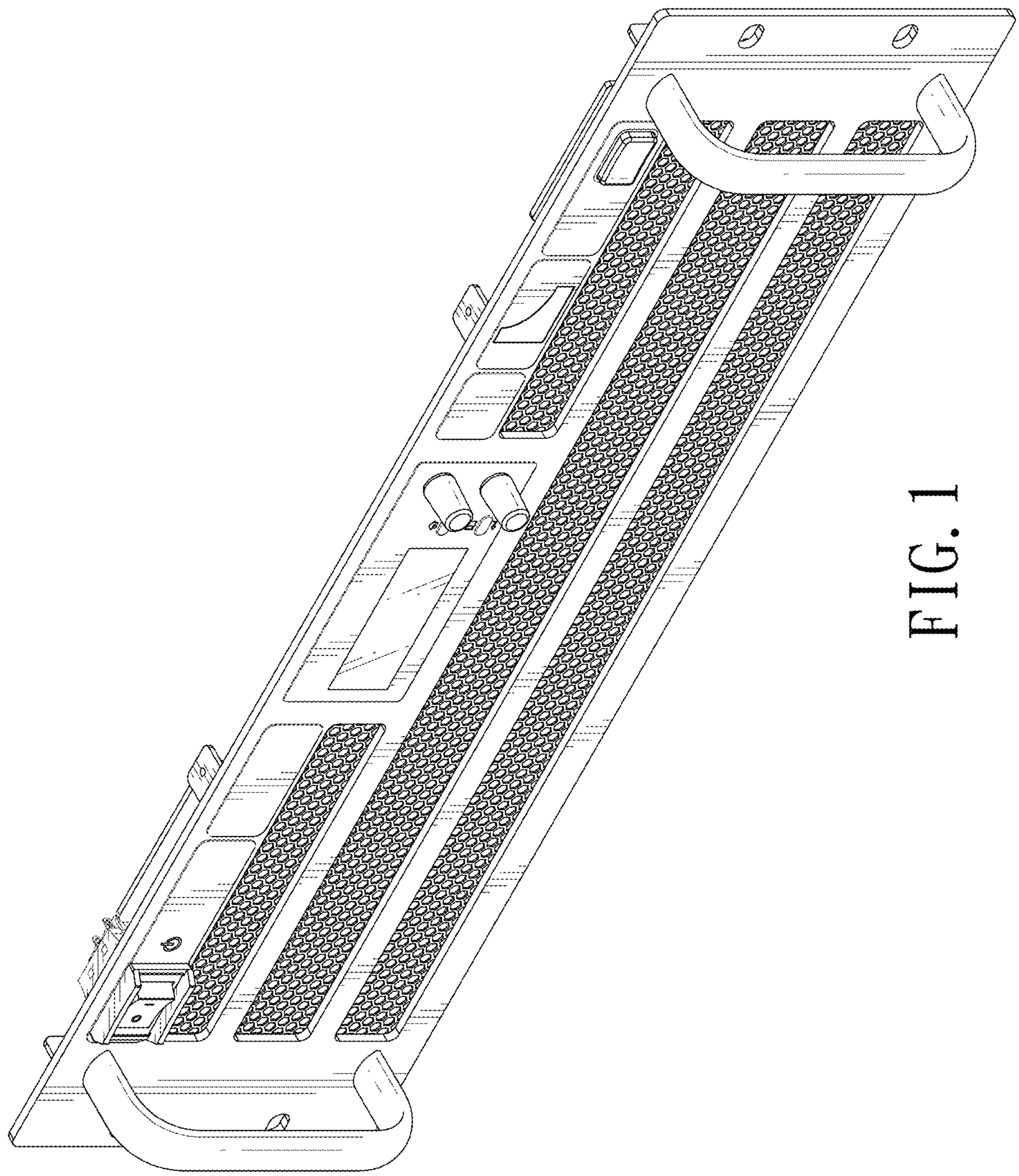

FIG. 1

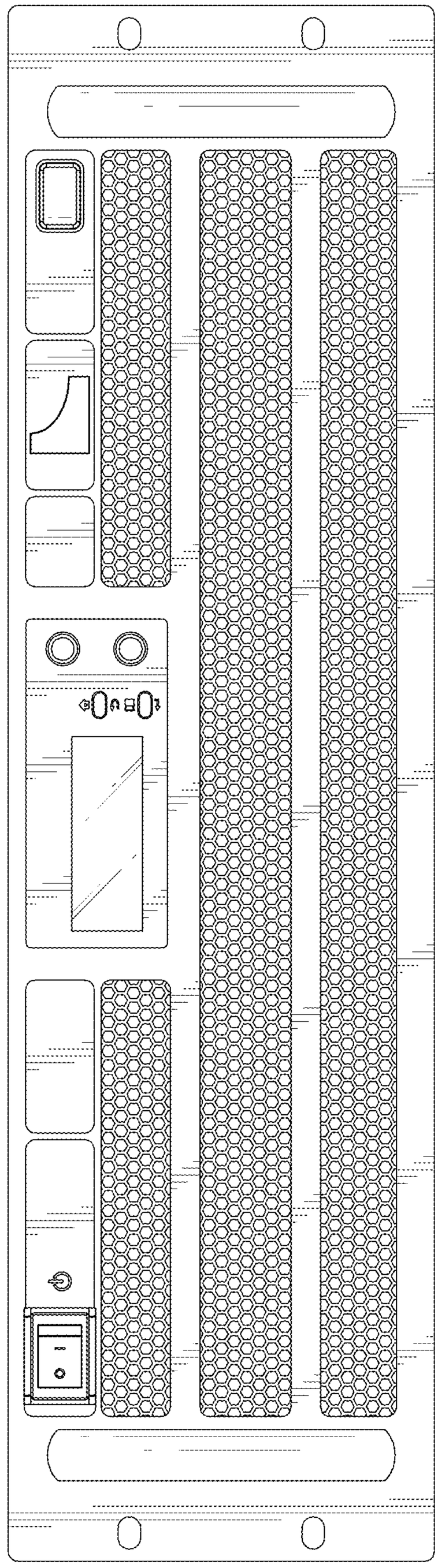

FIG. 2

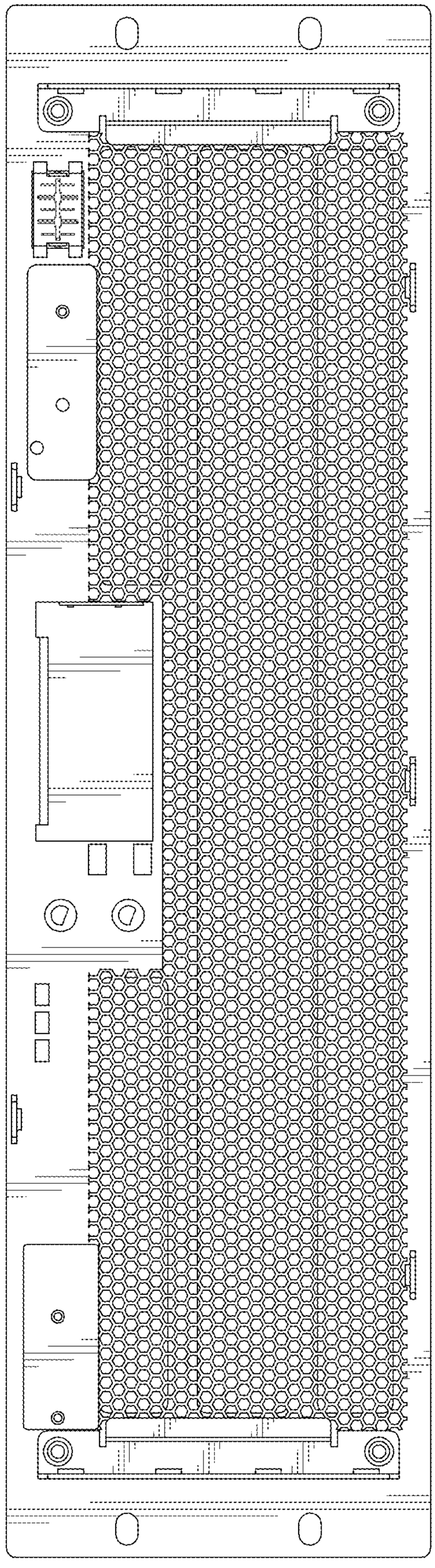

FIG. 3

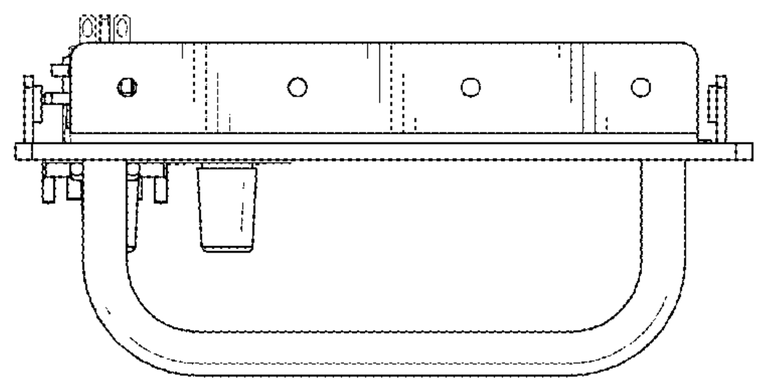

FIG. 5

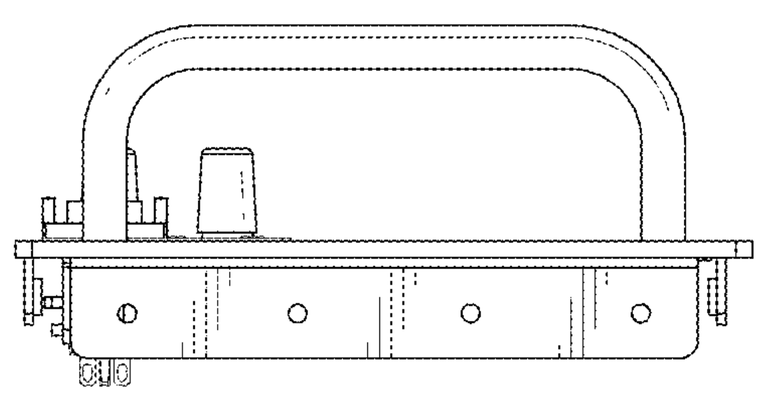

FIG. 4

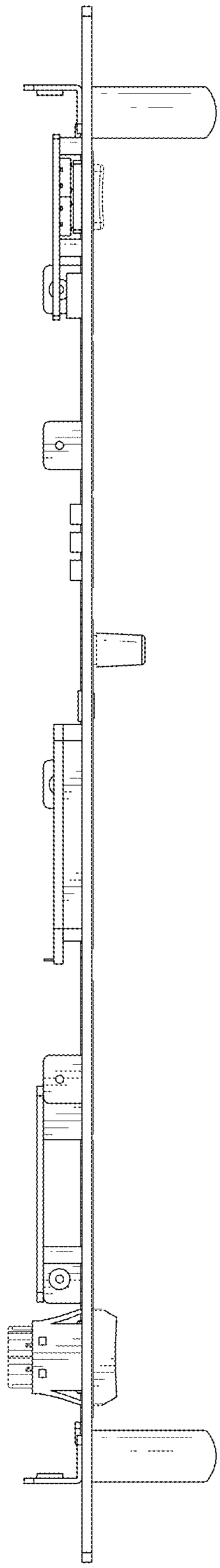

FIG. 6

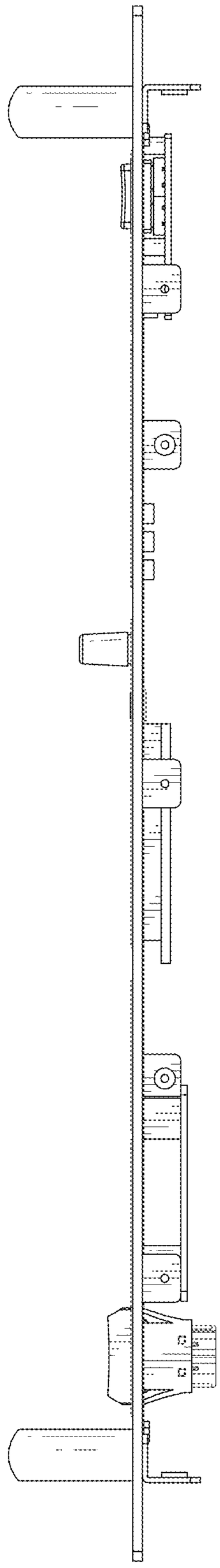

FIG. 7