US00D870280S

(12) United States Design Patent

Roychowdhury et al.

(10) Patent No.: US D870,280 S
(45) Date of Patent: ** Dec. 17, 2019

(54) **FITTING FOR AN ENDOSCOPE DEVICE HAVING PROTUBERANCES**

(71) Applicant: **MEDIVATORS INC.**, Minneapolis, MN (US)

(72) Inventors: **Suranjan Roychowdhury**, Plymouth, MN (US); **John Schreiner**, Montgomery, TX (US)

(73) Assignee: **Medivators Inc.**, Minneapolis, MN (US)

(**) Term: **15 Years**

(21) Appl. No.: **29/605,529**

(22) Filed: **May 26, 2017**

(51) **LOC (12) Cl.** **24-02**

(52) **U.S. Cl.**
USPC **D24/138**

(58) **Field of Classification Search**
USPC D24/138, 137, 127, 113, 108, 133
(Continued)

(56) **References Cited**

U.S. PATENT DOCUMENTS

1,675,469 A * 7/1928 Schreiner B23B 51/0406 408/200
3,583,393 A 6/1971 Takahashi
(Continued)

FOREIGN PATENT DOCUMENTS

CA 2800198 A1 12/2011
CN 102811656 A 12/2012
(Continued)

OTHER PUBLICATIONS

Certificate of Registration of Registered Community Design issued by the European Union Intellectual Property Office, Registration No. 003996362-0001, registered May 11, 2017.
(Continued)

Primary Examiner — Eliza Z Bennett-Hattan
(74) *Attorney, Agent, or Firm* — Sorell, Lenna & Schmidt, LLP; William D. Schmidt

(57) **CLAIM**

The ornamental design for a fitting for an endoscope device having protuberances, as shown and described.

DESCRIPTION

FIG. **1** is a perspective view of a fitting for an endoscope device having protuberances;
FIG. **2** is a front view of the fitting for an endoscope device having protuberances, the back view being identical thereto;
FIG. **3** is a left view of the fitting for an endoscope device having protuberances, the right view being identical thereto;
FIG. **4** is a top view of the fitting for an endoscope device having protuberances;
FIG. **5** is a bottom view of the fitting for an endoscope device having protuberances;
FIG. **6** is a perspective view of the fitting for an endoscope device having protuberances;
FIG. **7** is a front view of the fitting for an endoscope device having protuberances, the back view being identical thereto;
FIG. **8** is a left view of the fitting for an endoscope device having protuberances, the right view being identical thereto;
FIG. **9** is a top view of the fitting for an endoscope device having protuberances;
FIG. **10** is a bottom view of the fitting for an endoscope device having protuberances;
FIG. **11** is a perspective view of the fitting for an endoscope device having protuberances;
FIG. **12** is a front view of the fitting for an endoscope device having protuberances, the back, left and right views being identical thereto;
FIG. **13** is a top view of the fitting for an endoscope device having protuberances; and,
FIG. **14** is a bottom view of the fitting for an endoscope device having protuberances.

The broken lines of the figures depict unclaimed portions of the fitting for an endoscope device having protuberances only and form no part of the claimed design.

1 Claim, 14 Drawing Sheets

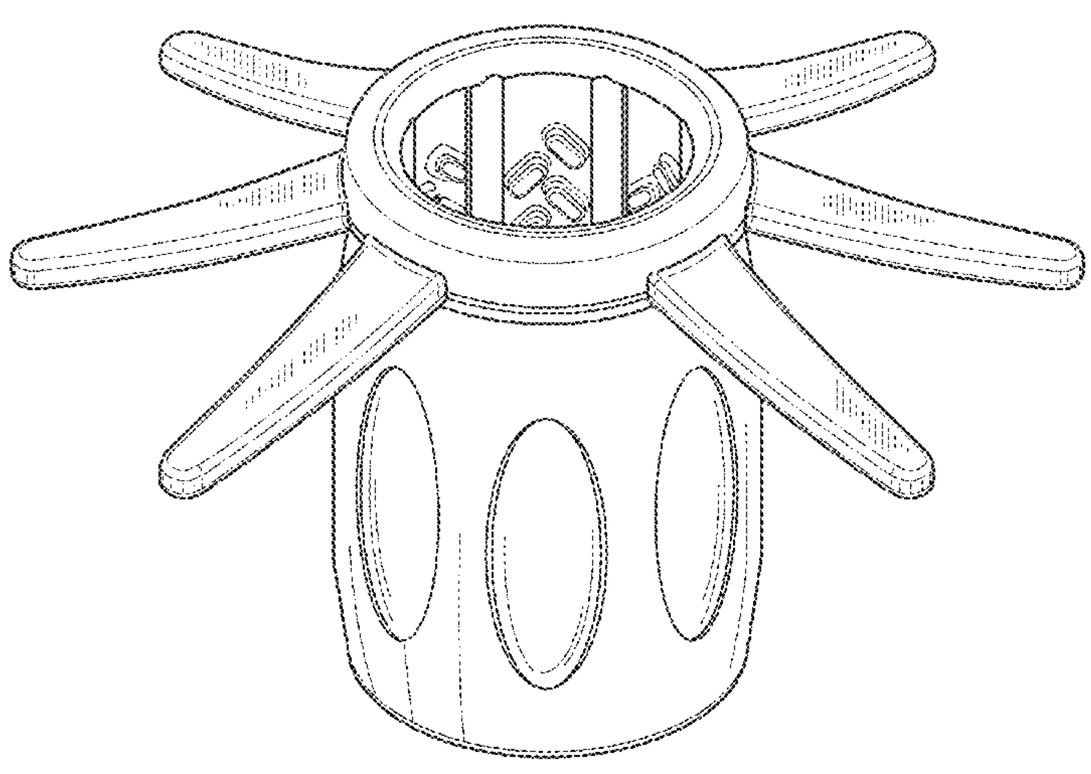

(58) **Field of Classification Search**
CPC A61B 1/00126
See application file for complete search history.

(56) **References Cited**

U.S. PATENT DOCUMENTS

3,717,151	A	2/1973	Collett	
D241,984	S *	10/1976	Lahay	D24/127
D242,491	S *	11/1976	Campagna	D24/127
4,207,872	A	6/1980	Meiri et al.	
4,630,175	A	12/1986	Lerude et al.	
5,018,509	A	5/1991	Suzuki et al.	
5,752,912	A	5/1998	Takahashi et al.	
D397,436	S *	8/1998	Michelson	D24/133
5,817,062	A	10/1998	Flom et al.	
5,924,978	A	7/1999	Koeda et al.	
6,293,907	B1	9/2001	Axon et al.	
6,589,213	B2	7/2003	Reydel	
D484,241	S *	12/2003	Peters	D24/108
6,767,339	B2	7/2004	Reydel	
6,916,284	B2	7/2005	Moriyama	
6,929,601	B2	8/2005	Nakao	
D616,094	S *	5/2010	Boone, III	D24/133
D637,288	S *	5/2011	Houghton	D24/133
8,038,604	B2	10/2011	Hamazaki et al.	
D650,074	S *	12/2011	Hunt	D24/133
D650,075	S *	12/2011	Anglay	D24/130
8,142,348	B2	3/2012	Miyoshi	
8,348,889	B2	1/2013	Salemi et al.	
D747,457	S *	1/2016	Glace	D24/108
D757,935	S *	5/2016	Solingen	D24/133
9,347,855	B2	5/2016	Kell et al.	
D816,215	S *	4/2018	Dolgin	D24/127
2003/0187326	A1	10/2003	Chang	
2004/0077926	A1	4/2004	Moriyama	
2004/0210110	A1	10/2004	Nakao	
2005/0049624	A1	3/2005	Francese et al.	
2006/0173241	A1	8/2006	Ouchi et al.	
2006/0258902	A1	11/2006	Spivey et al.	
2007/0282255	A1	12/2007	Salemi	
2008/0108871	A1	5/2008	Mohr	
2008/0215036	A1	9/2008	Vogel et al.	
2008/0243106	A1	10/2008	Coe et al.	
2009/0048483	A1	2/2009	Yamamoto	
2009/0112063	A1	4/2009	Bakos et al.	
2010/0130821	A1	5/2010	Rosemurgy et al.	
2011/0174313	A1	7/2011	Von Pechmann et al.	
2013/0090527	A1	4/2013	Axon	
2014/0296643	A1	10/2014	Levy et al.	
2015/0148606	A1	5/2015	Rottenberg et al.	
2018/0168437	A1 *	6/2018	Schreiner	A61B 1/00101

FOREIGN PATENT DOCUMENTS

CN	102905608	B	11/2015
EP	2575590	A2	4/2013
GB	2478081		8/2011
JP	H0777576	B2	8/1995
JP	2003033319		2/2003
JP	2003339631	A	12/2003
WO	200013736		3/2000
WO	2007103999		9/2007
WO	2011019388		2/2011
WO	2011039756		4/2011
WO	2011085319		7/2011
WO	2011148172		12/2011
WO	2015127265		8/2015
WO	20160209240	A1	12/2016
WO	20160210306	A1	12/2016

OTHER PUBLICATIONS

Certificate of Registration of Registered Community Design issued by the European Union Intellectual Property Office, Registration No. 003996362-0002, registered May 11, 2017.

Certificate of Registration of Registered Community Design issued by the European Union Intellectual Property Office, Registration No. 003996362-0003, registered May 11, 2017.

Certificate of Registration of Registered Community Design issued by the European Union Intellectual Property Office, Registration No. 003996362-0004, registered May 11, 2017.

International Search Report and Written Opinion for the International Searching Authority (US) dated Oct. 28, 2016 of International Application No. PCT/US2016/039326 filed on Jun. 24, 2016.

Opposition filed by Cantel (UK) Limited Sep. 14, 2016 in European Patent Application No. 11722861,9 filed May 24, 2011 (EP Patent EP2575590 of Arc Medical Design Limited).

Office Action and search report dated Jun. 3, 2019, in corresponding Chinese Application No. 2016800435960 filed Jan. 24, 2018.

Extended European Search Report and Written Opinion of the European Searching Authority dated Jan. 7, 2019 off corresponding European Application No. 16815408.6 filed Dec. 19, 2017.

* cited by examiner

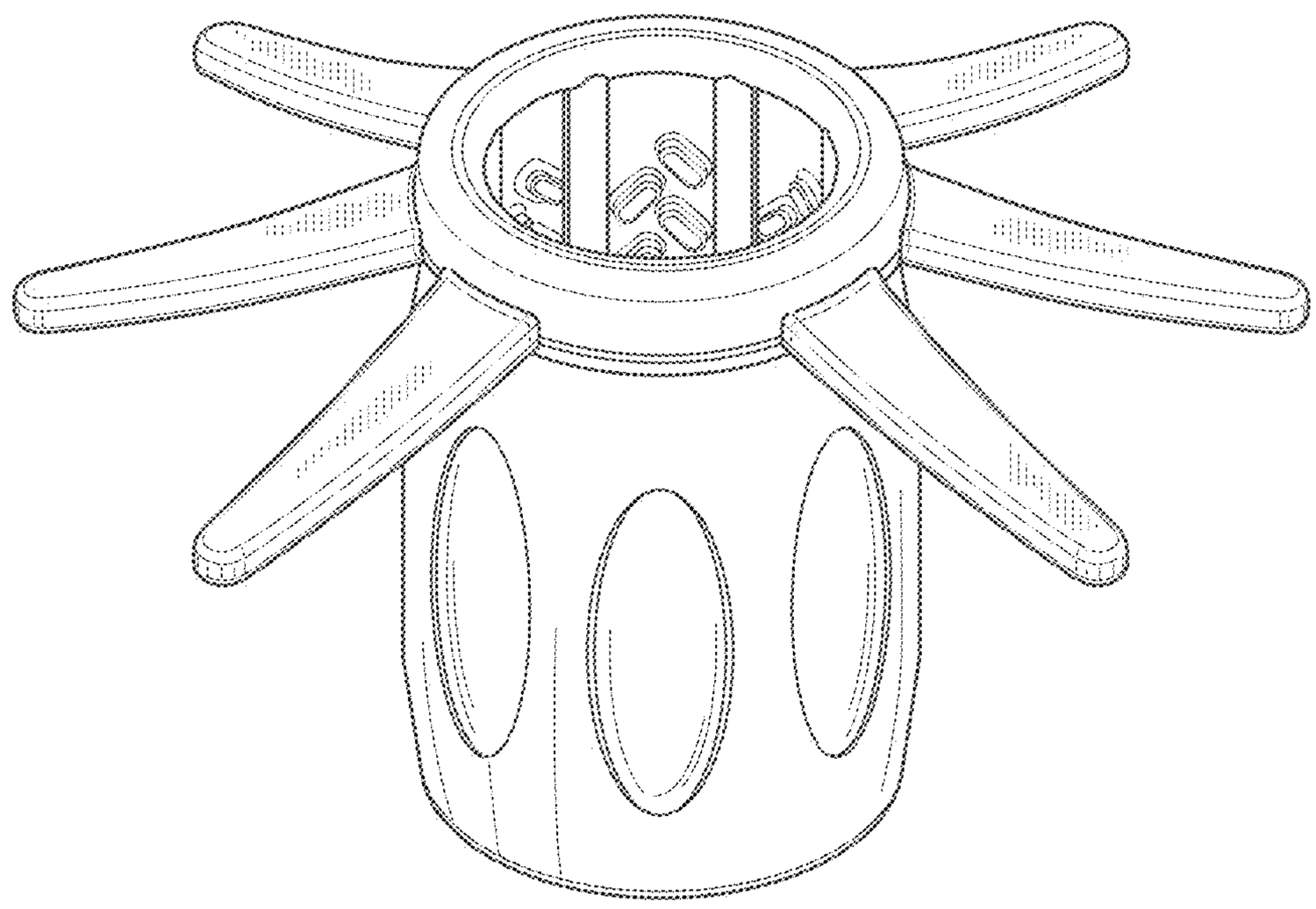

FIG. 1

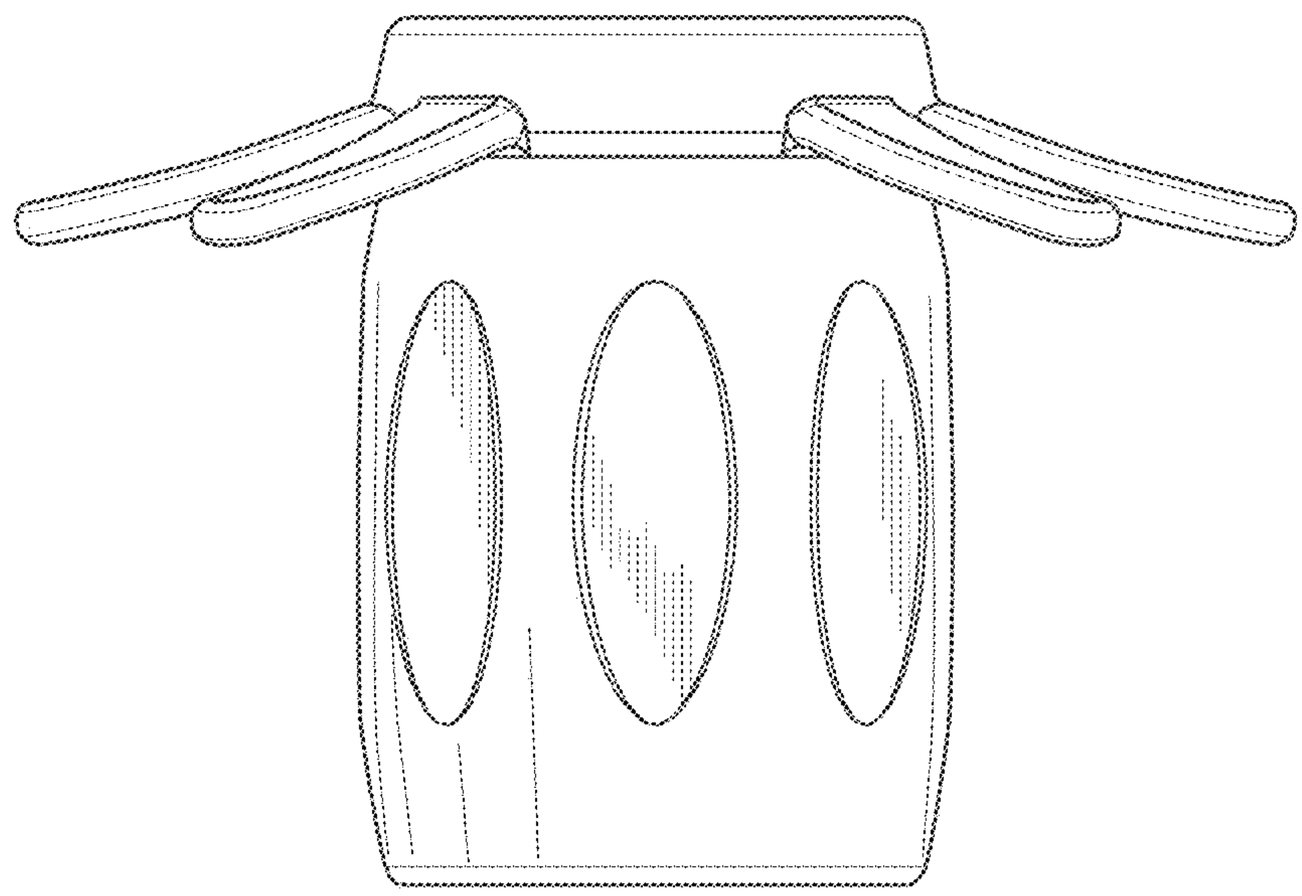

FIG. 2

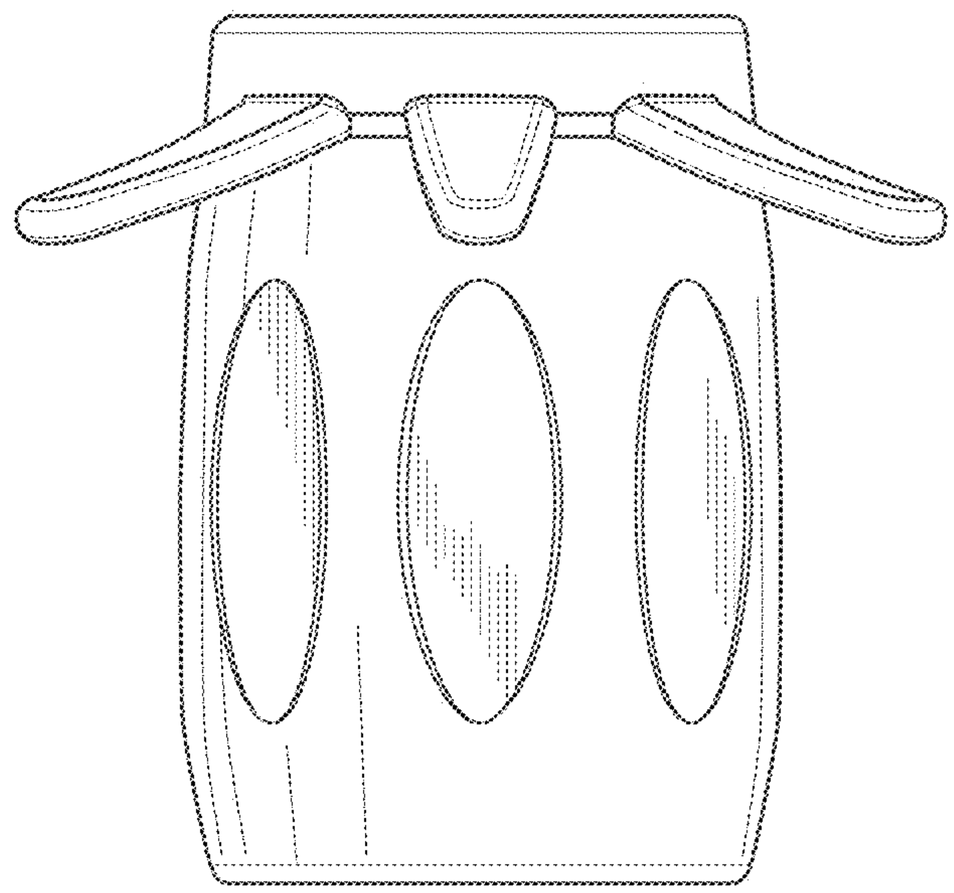

FIG. 3

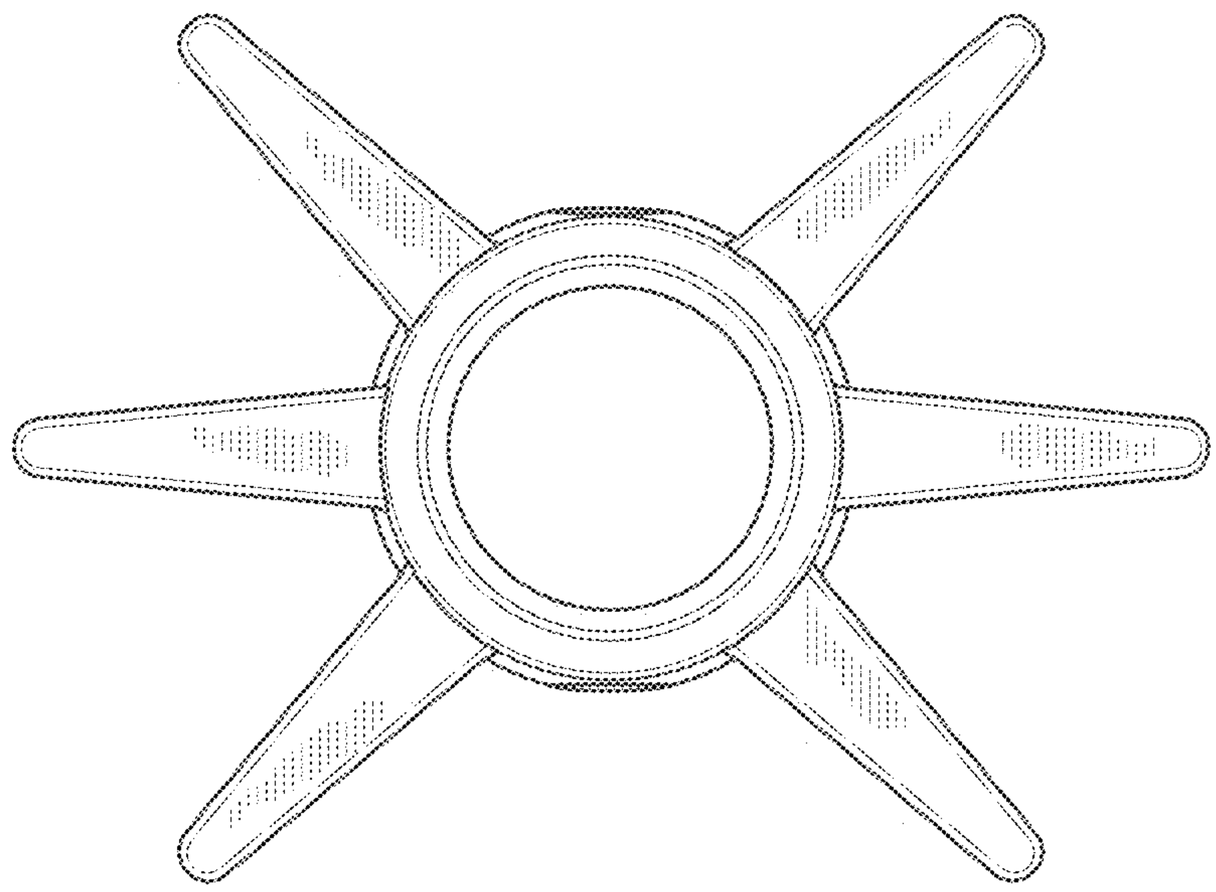

FIG. 4

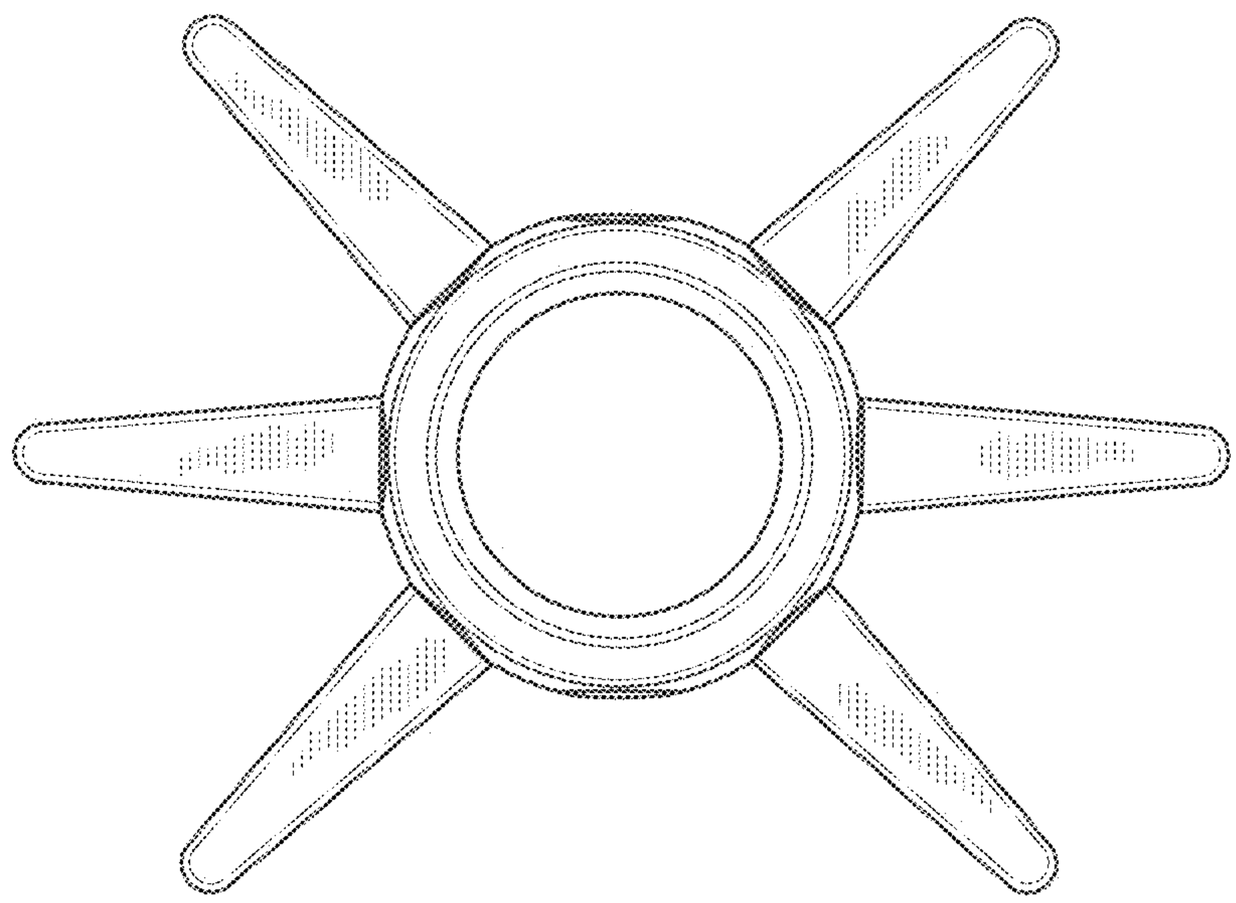

FIG. 5

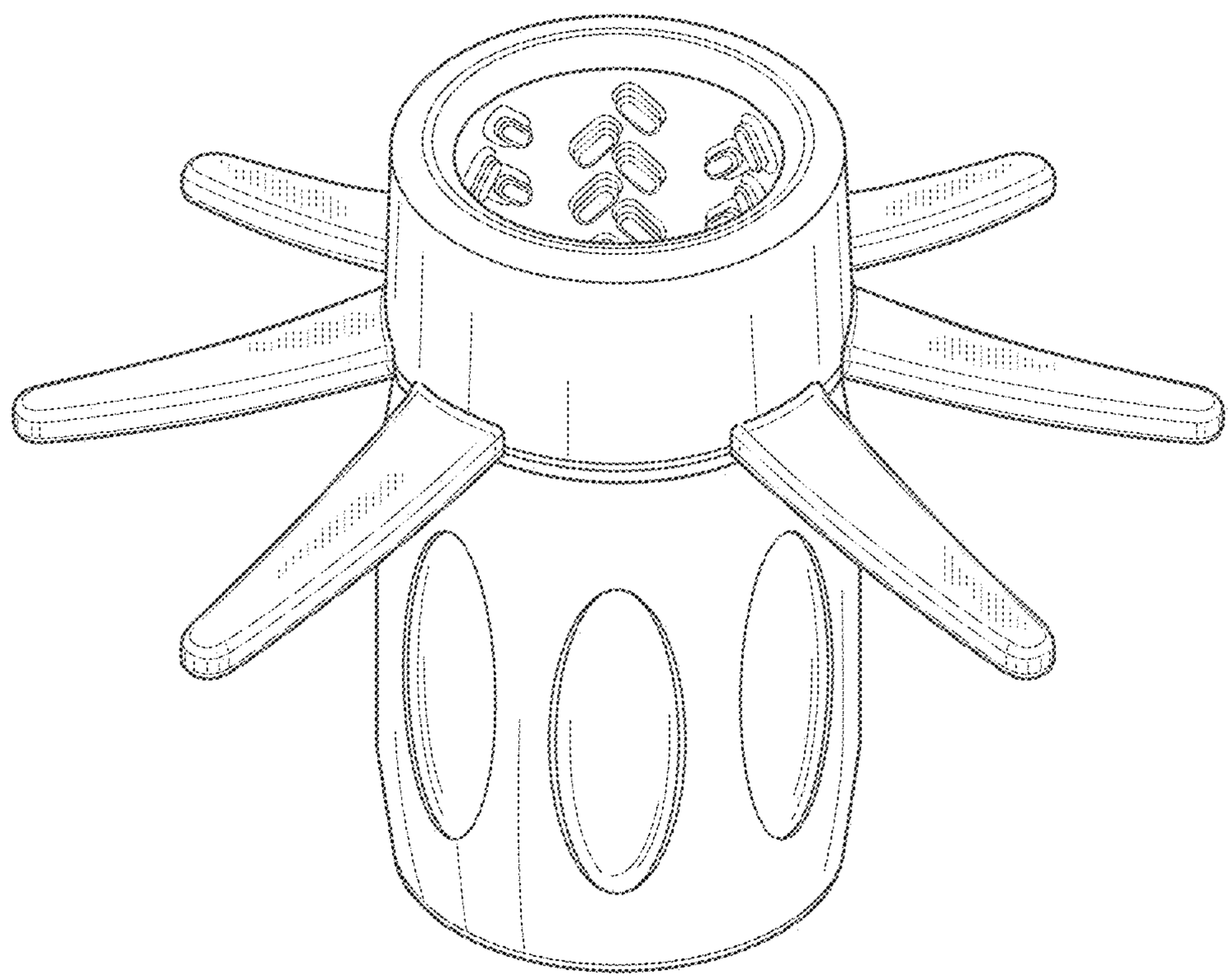

FIG. 6

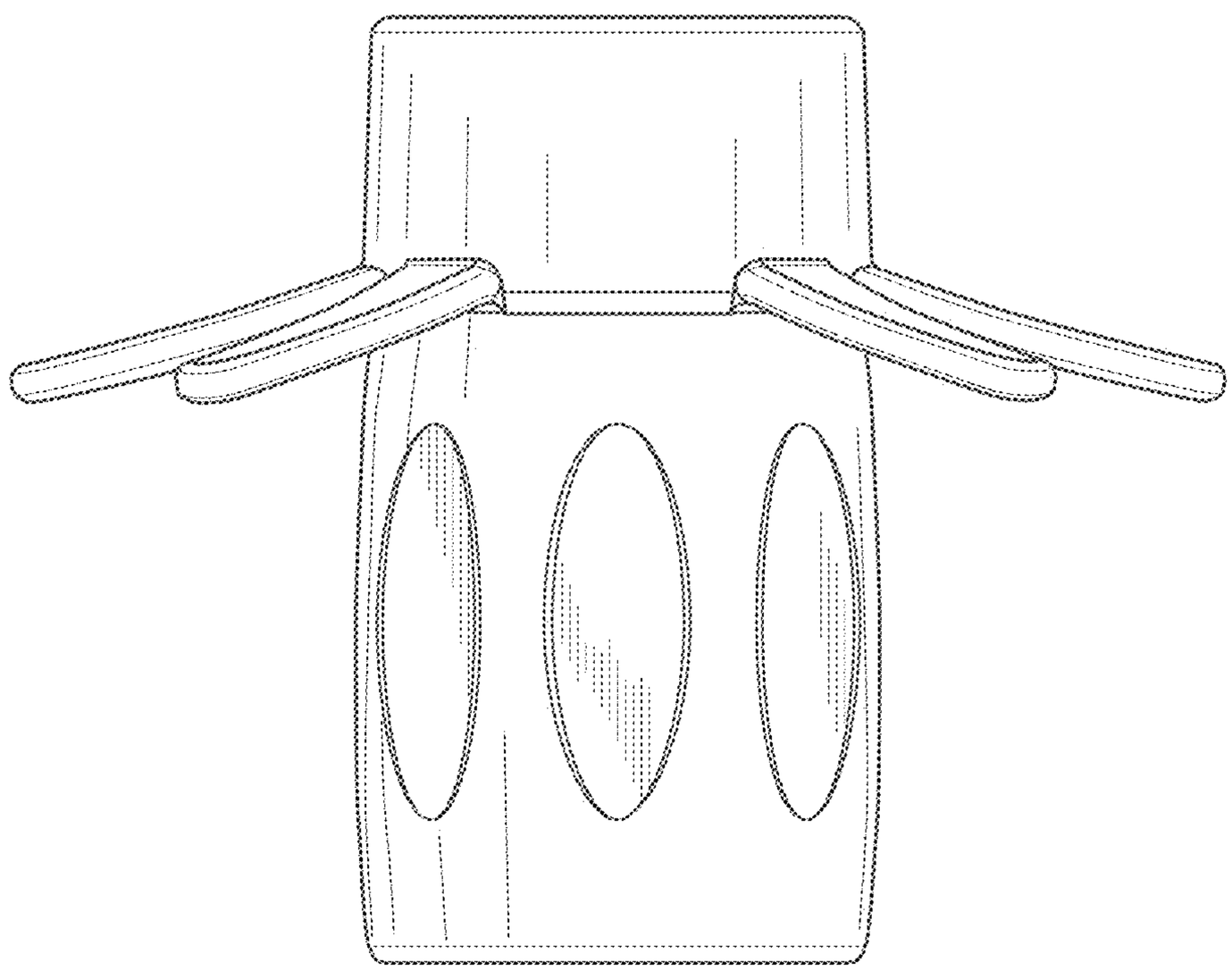

FIG. 7

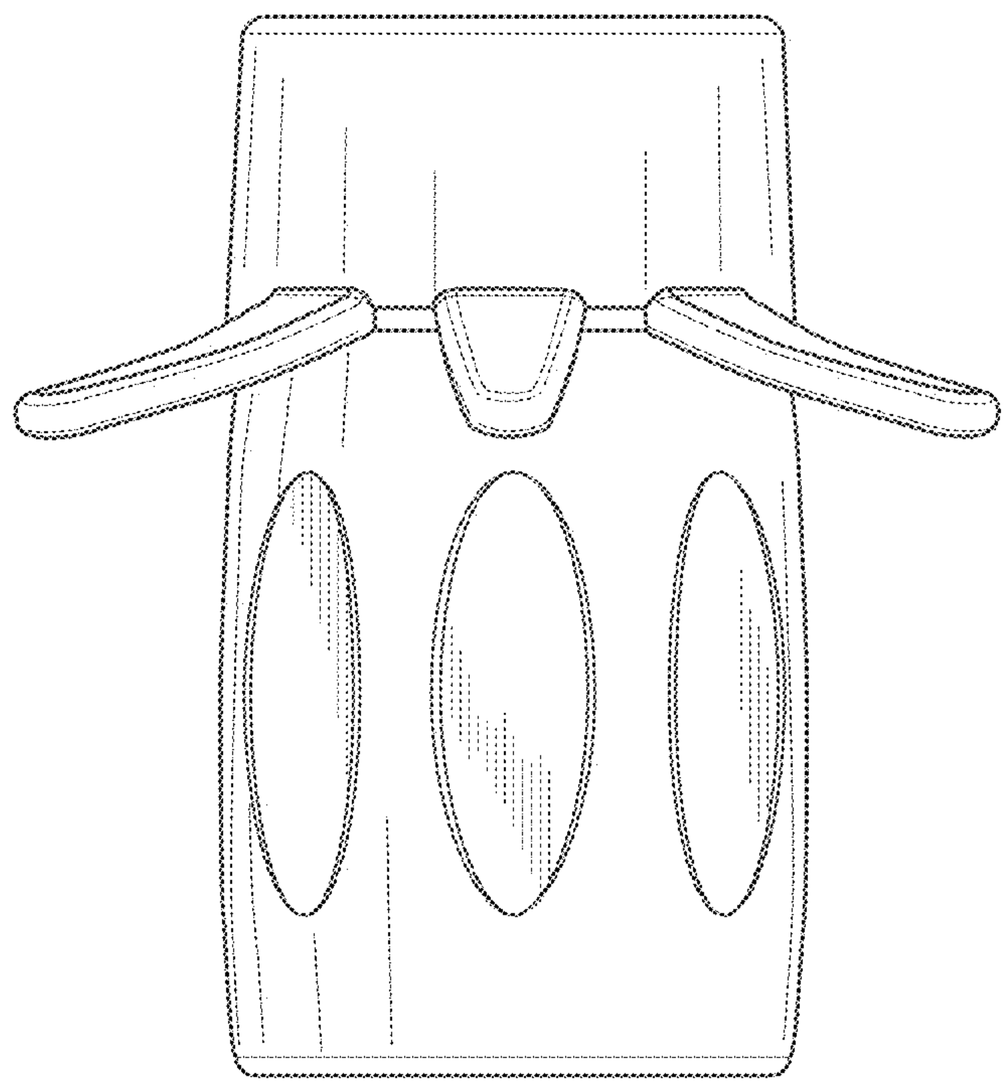

FIG. 8

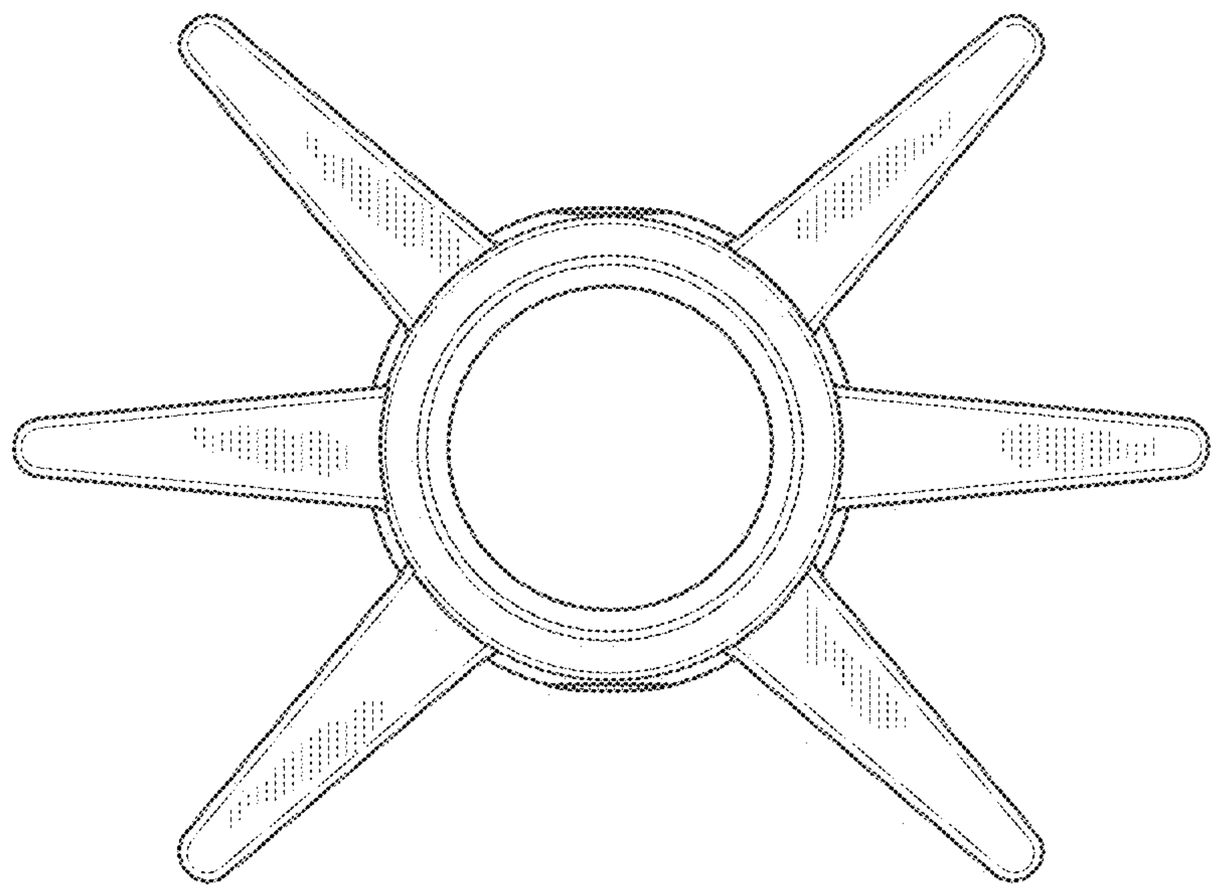

FIG. 9

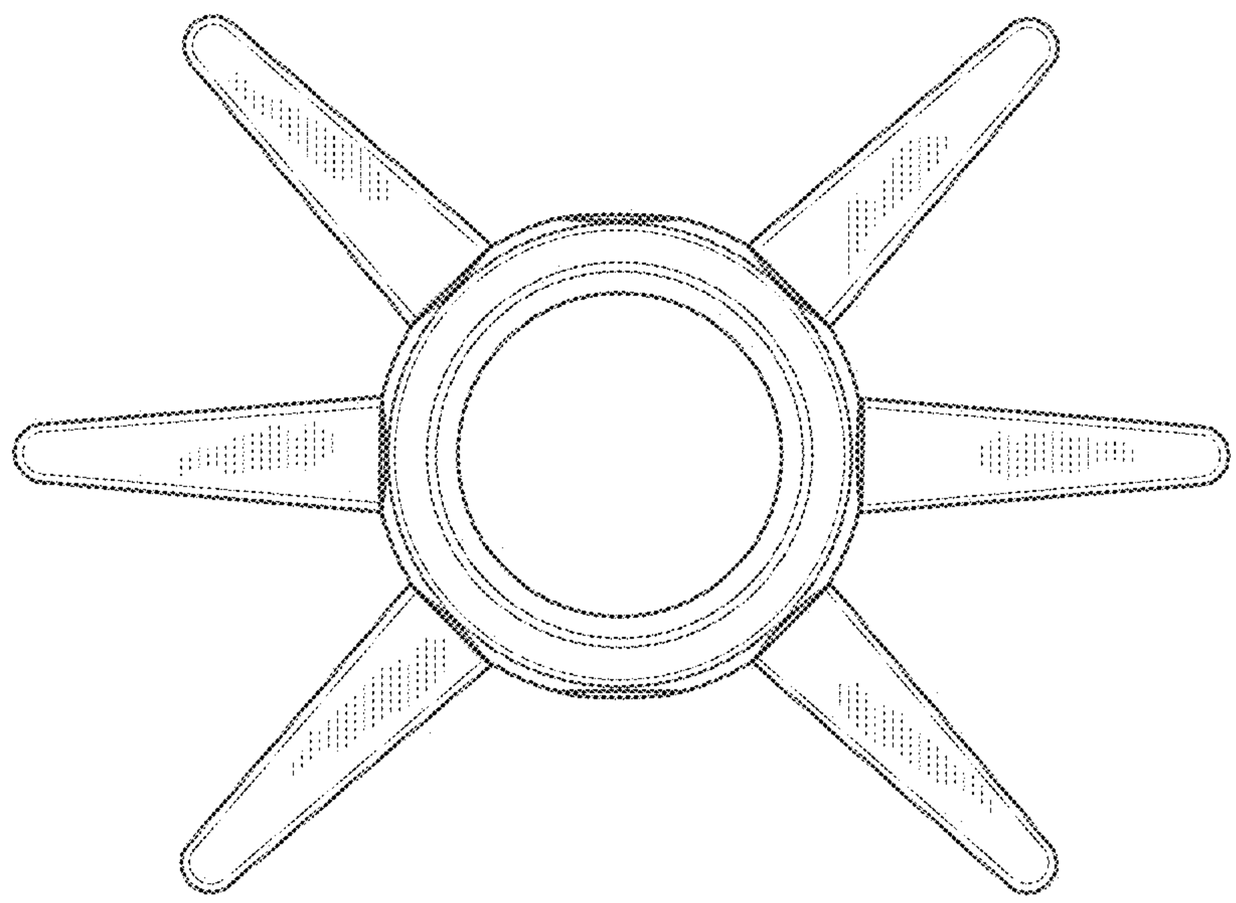

FIG. 10

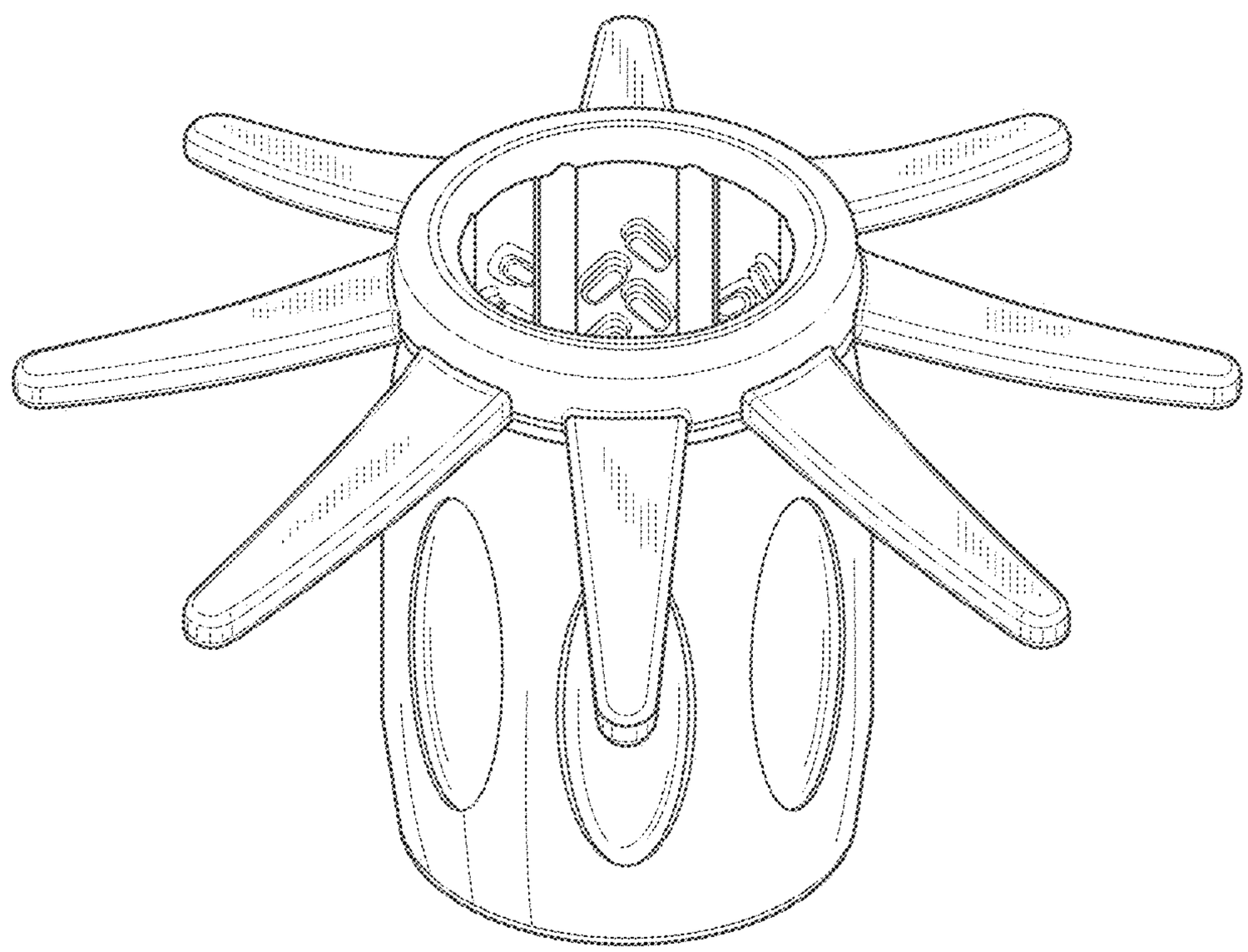

FIG. 11

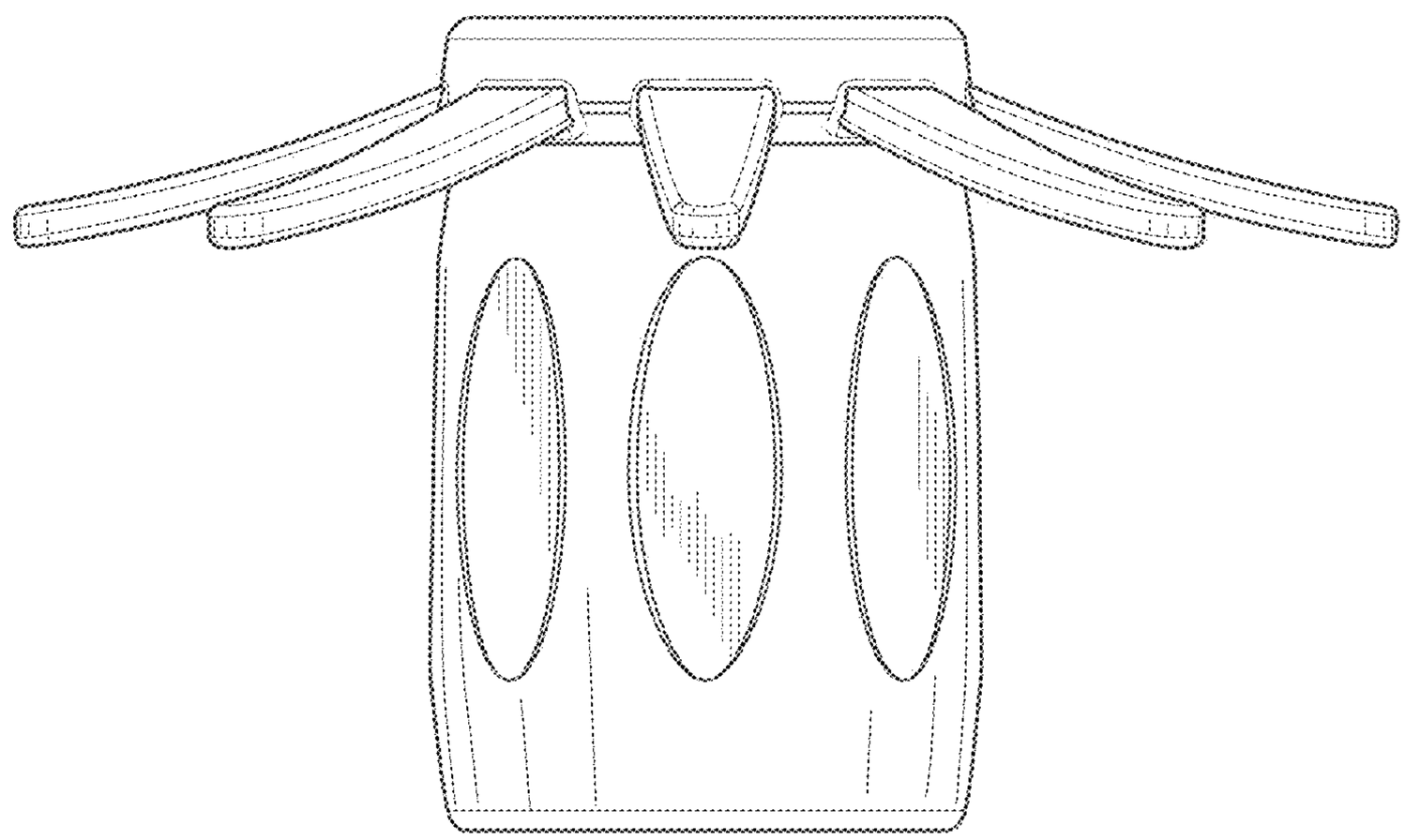

FIG. 12

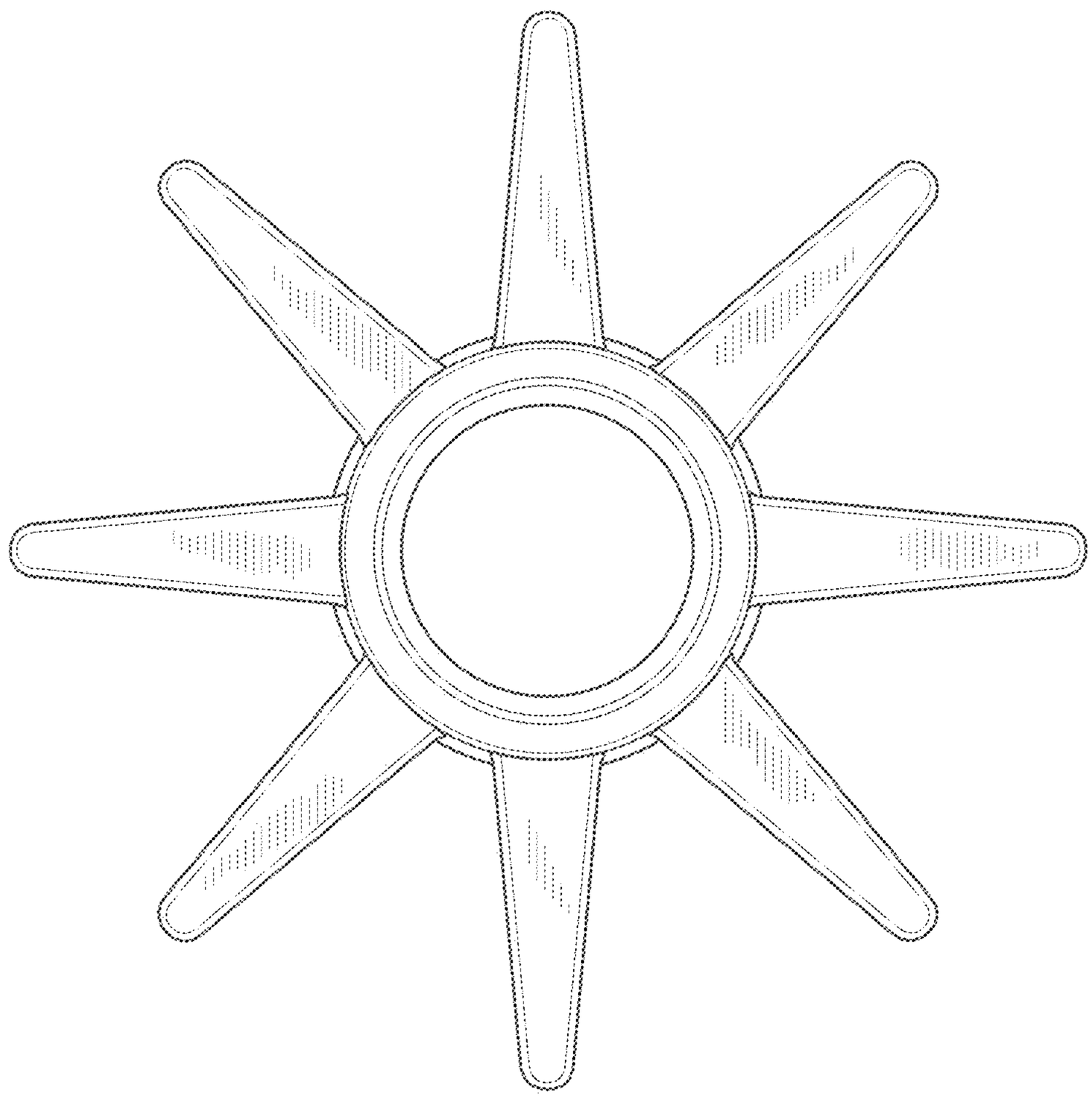

FIG. 13

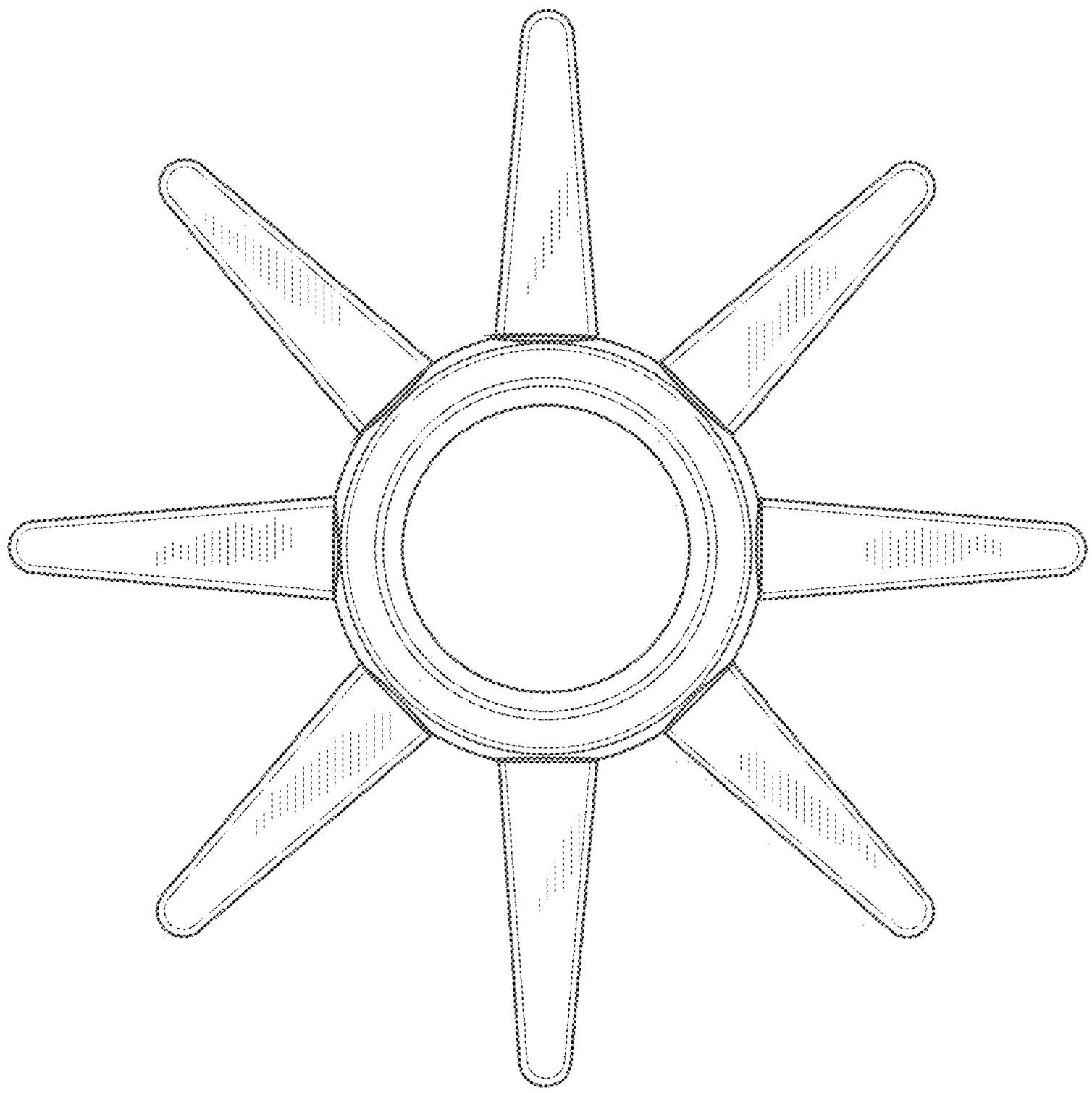

FIG. 14