US00D865708S

(12) United States Design Patent

Lee et al.

(10) Patent No.: US D865,708 S
(45) Date of Patent: ** Nov. 5, 2019

(54) **HEADSET**

(71) Applicant: **Kingston Digital, Inc.**, Fountain Valley, CA (US)

(72) Inventors: **Baron King Lee**, Fountain Valley, CA (US); **Peter Leekuo Chou**, Fountain Valley, CA (US); **Guan Hua Tzeng**, Hsinchu (TW); **Penhao Ma**, Hsinchu (TW)

(73) Assignee: **Kingston Digital, Inc.**, Fountain Valley, CA (US)

(**) Term: **15 Years**

(21) Appl. No.: **29/646,814**

(22) Filed: **May 7, 2018**

(51) **LOC (12) Cl.** **14-01**

(52) **U.S. Cl.**
USPC **D14/206**; D14/226

(58) **Field of Classification Search**
USPC D14/206, 226, 205, 188, 192, 218; D29/112; 2/209; 181/129, 130, 135; 379/430, 431; 381/380, 381, 374, 74, 381/370; 455/90.3, 575.1, 569.1
CPC H04R 25/00; H04R 1/1066; H04R 1/1016; H04R 5/033; H04R 5/0335; H04R 1/105; H04R 1/1058
See application file for complete search history.

(56) **References Cited**

U.S. PATENT DOCUMENTS

1,403,315 A * 1/1922 Gomez E21B 19/083 173/160
1,651,623 A * 12/1927 Obergfell H04R 1/1066 381/374
3,049,582 A * 8/1962 Shinn H01R 4/70 174/92
3,104,398 A * 9/1963 Palmaer A61F 11/14 2/209
D229,833 S * 1/1974 Becker D14/205
D255,352 S * 6/1980 Besasie D14/205
4,459,707 A * 7/1984 Stallings A61F 11/14 181/129
4,987,592 A * 1/1991 Flagg H04M 1/05 379/430
5,018,599 A * 5/1991 Dohi H04R 1/1008 181/129

(Continued)

Primary Examiner — Paula Allen Greene
(74) *Attorney, Agent, or Firm* — Skaar Ulbrich Macari, P.A.

(57) **CLAIM**

We claim an ornamental design for a headset, as shown and described.

DESCRIPTION

FIG. **1** is a first perspective view of a headset showing the claimed design;
FIG. **2** is a second perspective view of FIG. **1**;
FIG. **3** is a third perspective view of FIG. **1**;
FIG. **4** is a front elevational view of FIG. **1**;
FIG. **5** is a rear elevational view of FIG. **1**;
FIG. **6** is a left side elevational view of FIG. **1**;
FIG. **7** is a right side elevational view of FIG. **1**;
FIG. **8** is a top plan view of FIG. **1**;
FIG. **9** is a bottom plan view of FIG. **1**;
FIG. **10** is an enlarged view according to "an area A" of FIG. **2**;
FIG. **11** is an enlarged view according to "an area B" of FIG. **3**; and,
FIG. **12** is an enlarged view according to "an area C" of FIG. **9**.
The dashed broken lines in the figures represent portions of the article which form no part of the claimed design.
The dot-dash lines in the figures represent the boundary of enlarged areas which form no part of the claimed design.

1 Claim, 12 Drawing Sheets

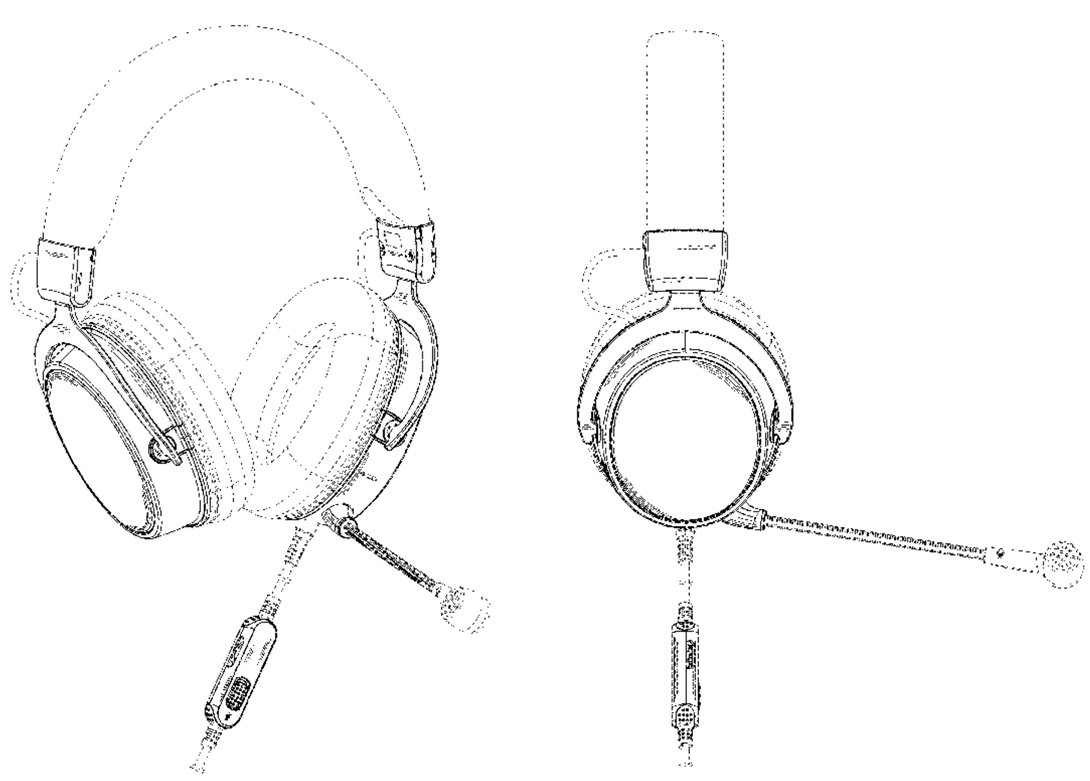

(56) **References Cited**

U.S. PATENT DOCUMENTS

D322,071 S * 12/1991 Bergin D14/205
5,068,923 A * 12/1991 Sjoqvist A61F 11/14 181/129
5,185,807 A * 2/1993 Bergin H04R 1/1066 181/128
5,210,792 A * 5/1993 Kajihara H04M 1/05 379/430
5,384,857 A * 1/1995 Nordin A61F 11/14 381/374
5,406,037 A * 4/1995 Nageno H04R 5/0335 181/129
5,793,878 A * 8/1998 Chang H04R 5/0335 381/370
6,006,115 A * 12/1999 Wingate H04M 1/6033 379/110.01
D427,382 S * 6/2000 Leight D29/112
D434,191 S * 11/2000 Emilsson D29/112
6,449,806 B1 * 9/2002 Engelhard H04M 1/05 2/209
D465,477 S * 11/2002 Beraut D14/218
6,629,579 B1 * 10/2003 Hasegawa H04R 1/1066 181/129
D497,608 S * 10/2004 Birgersson D14/205
6,952,481 B2 * 10/2005 Larsen H04M 1/05 379/430
D512,708 S * 12/2005 Harris, Jr. D14/205
D520,492 S * 5/2006 Chen D14/205
7,106,873 B1 * 9/2006 Harrison H04R 25/456 381/330
7,172,052 B2 * 2/2007 Lenhard-Backhaus H04R 1/1066 181/129
D549,217 S * 8/2007 Viduya D14/206
7,292,704 B2 * 11/2007 Lederer G01R 33/283 381/380
7,388,960 B2 * 6/2008 Kuo H04R 1/1041 379/430
D592,639 S * 5/2009 Kuh D14/205
D603,370 S * 11/2009 Suzuki D14/205
7,766,120 B2 * 8/2010 Hansson A61F 11/14 181/129
D624,058 S * 9/2010 Kolton D14/205
D625,703 S * 10/2010 Kolton D14/205
D632,667 S * 2/2011 Martin D14/205
D648,706 S * 11/2011 Gresko D14/205
D649,956 S * 12/2011 Gresko D14/205
D651,764 S * 1/2012 Gresko A61F 11/14 D29/112
8,098,872 B2 * 1/2012 Chang H04R 1/1075 381/370
D665,776 S * 8/2012 Alden D14/205
D666,990 S * 9/2012 Komiyama D14/205
8,718,306 B2 * 5/2014 Gommel H04R 25/60 381/322
8,774,442 B2 * 7/2014 Huang H04R 1/1066 381/367
8,818,011 B2 * 8/2014 Chen H04R 1/1083 381/370
D713,376 S * 9/2014 Dedinas D14/206
D740,256 S * 10/2015 Carr D14/206
D743,381 S * 11/2015 Pi D14/218
D745,860 S * 12/2015 Logan D14/206
D754,632 S * 4/2016 Matsumura D14/205
D788,071 S * 5/2017 Logan D14/205
9,706,281 B2 * 7/2017 Hernandez Vazquez H04R 1/08
D793,995 S * 8/2017 Nakagawa D14/218
D815,614 S * 4/2018 Tzeng D14/205
D821,354 S * 6/2018 Ohmachi D14/205
D836,600 S * 12/2018 Lee D14/206
D840,370 S * 2/2019 Kelly D14/205
D845,928 S * 4/2019 Lee D14/206
D848,973 S * 5/2019 Karacal D14/205
2011/0194721 A1 * 8/2011 Schmidt H04R 1/1066 381/370
2011/0206216 A1 * 8/2011 Brunner H04R 1/1066 381/74

* cited by examiner

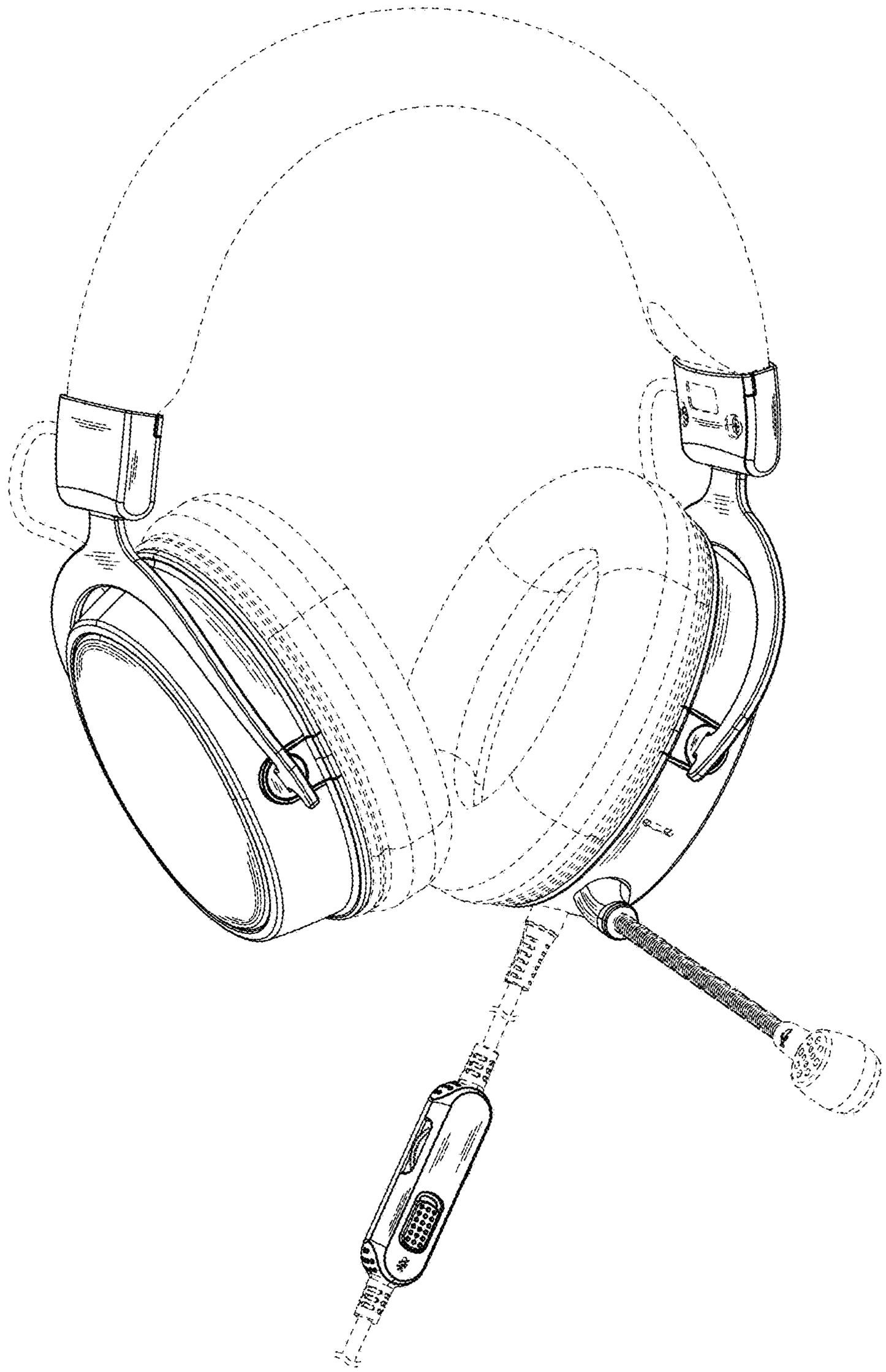

FIG. 1

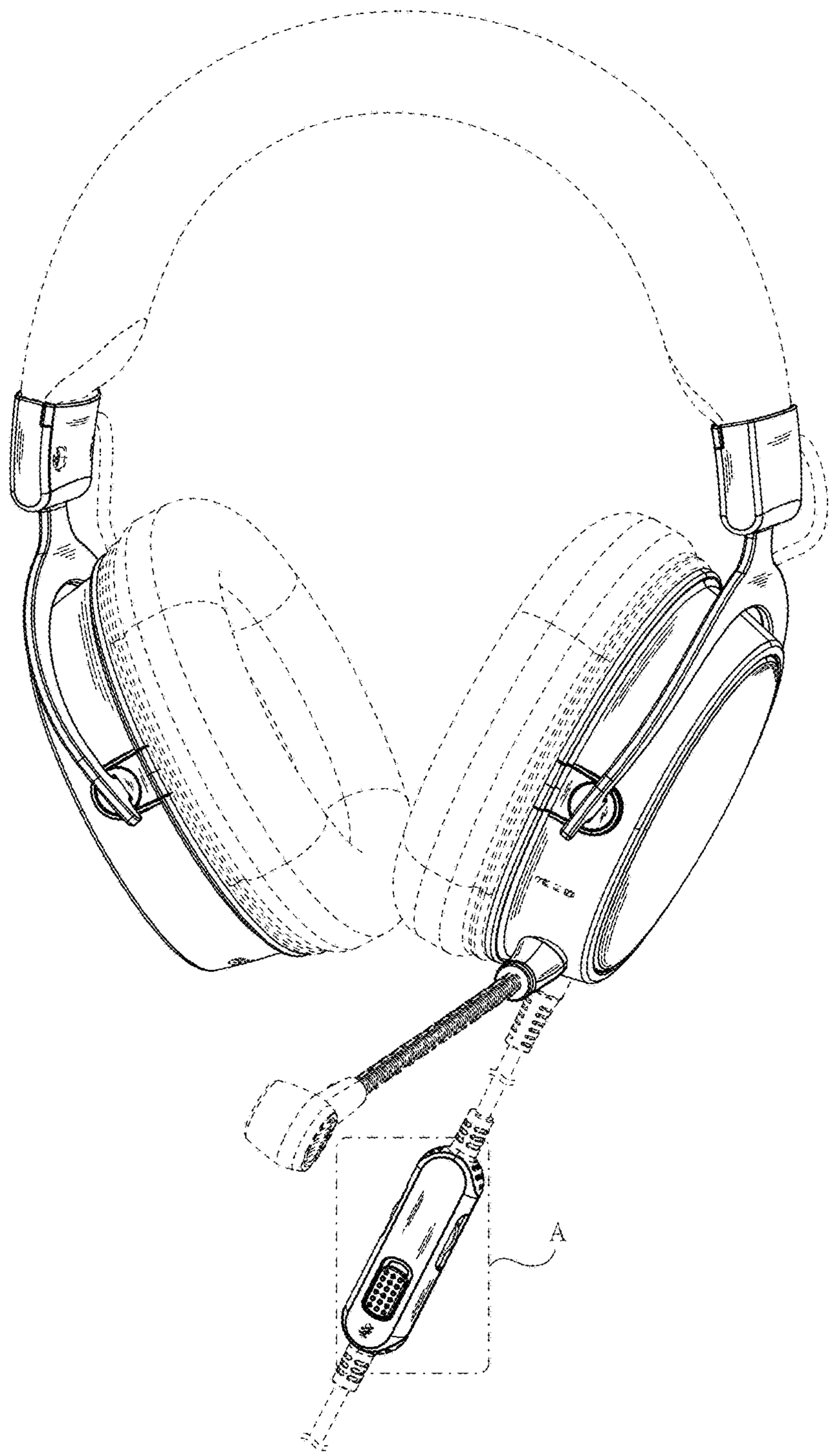

FIG. 2

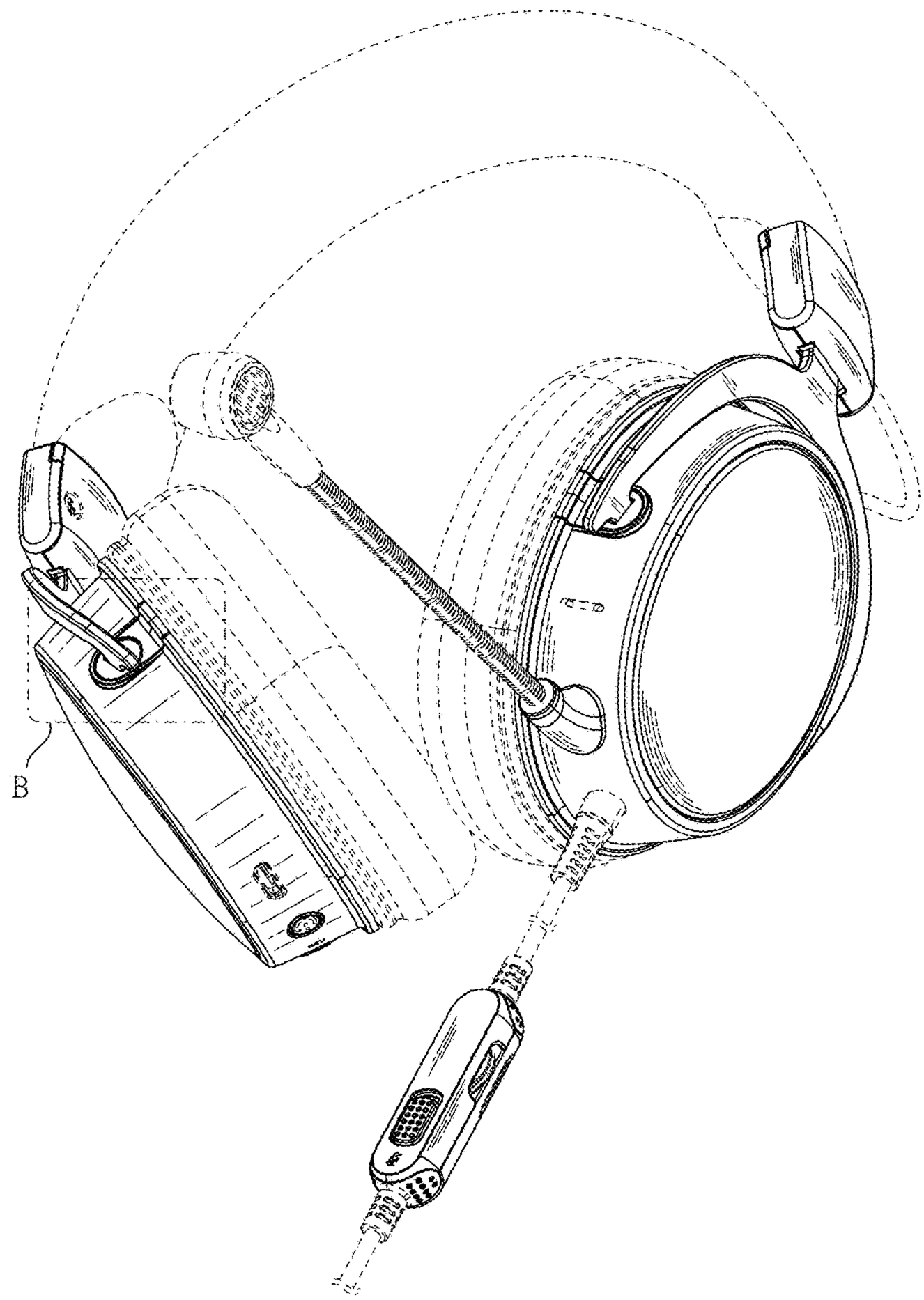

FIG. 3

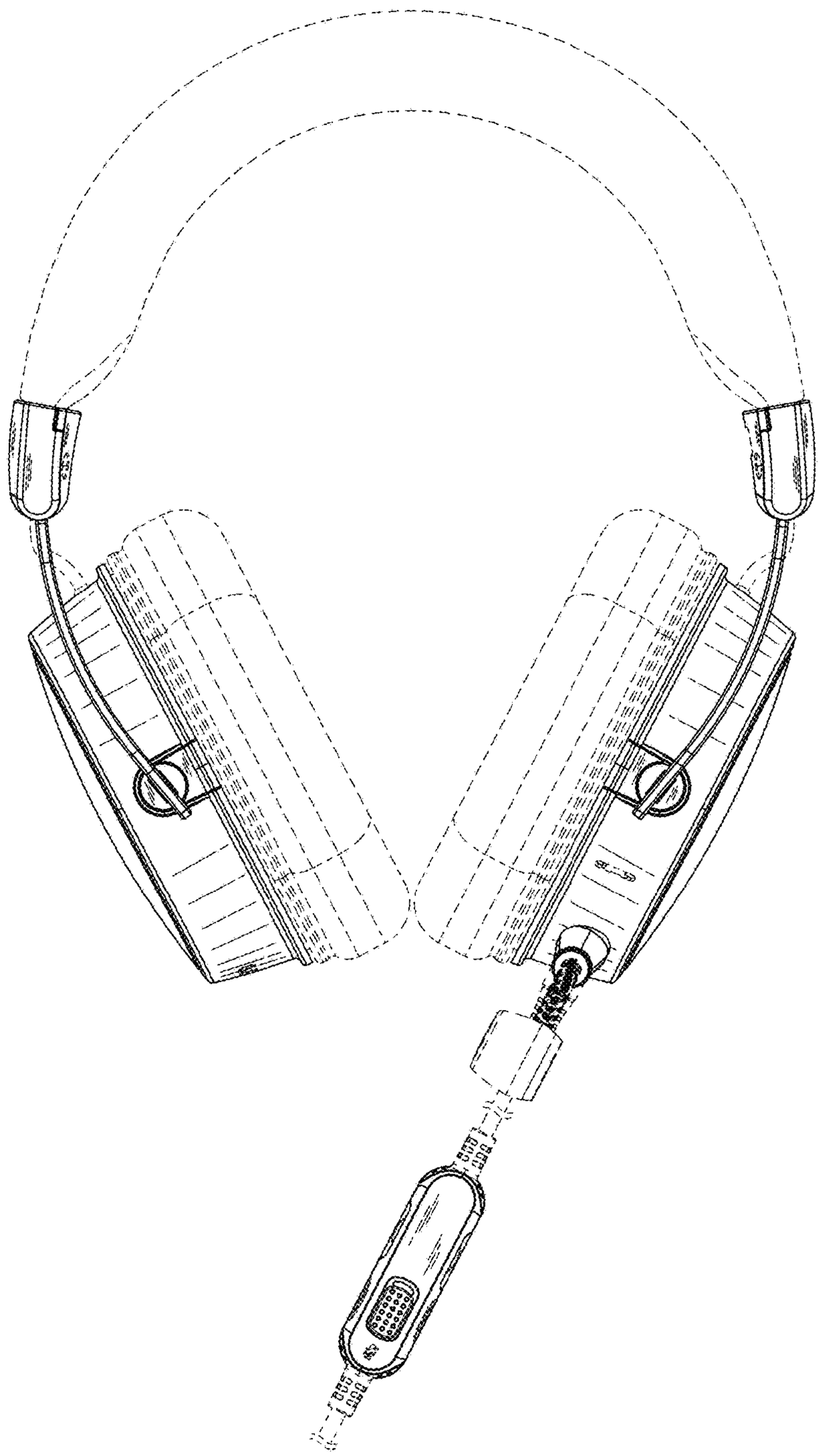

FIG. 4

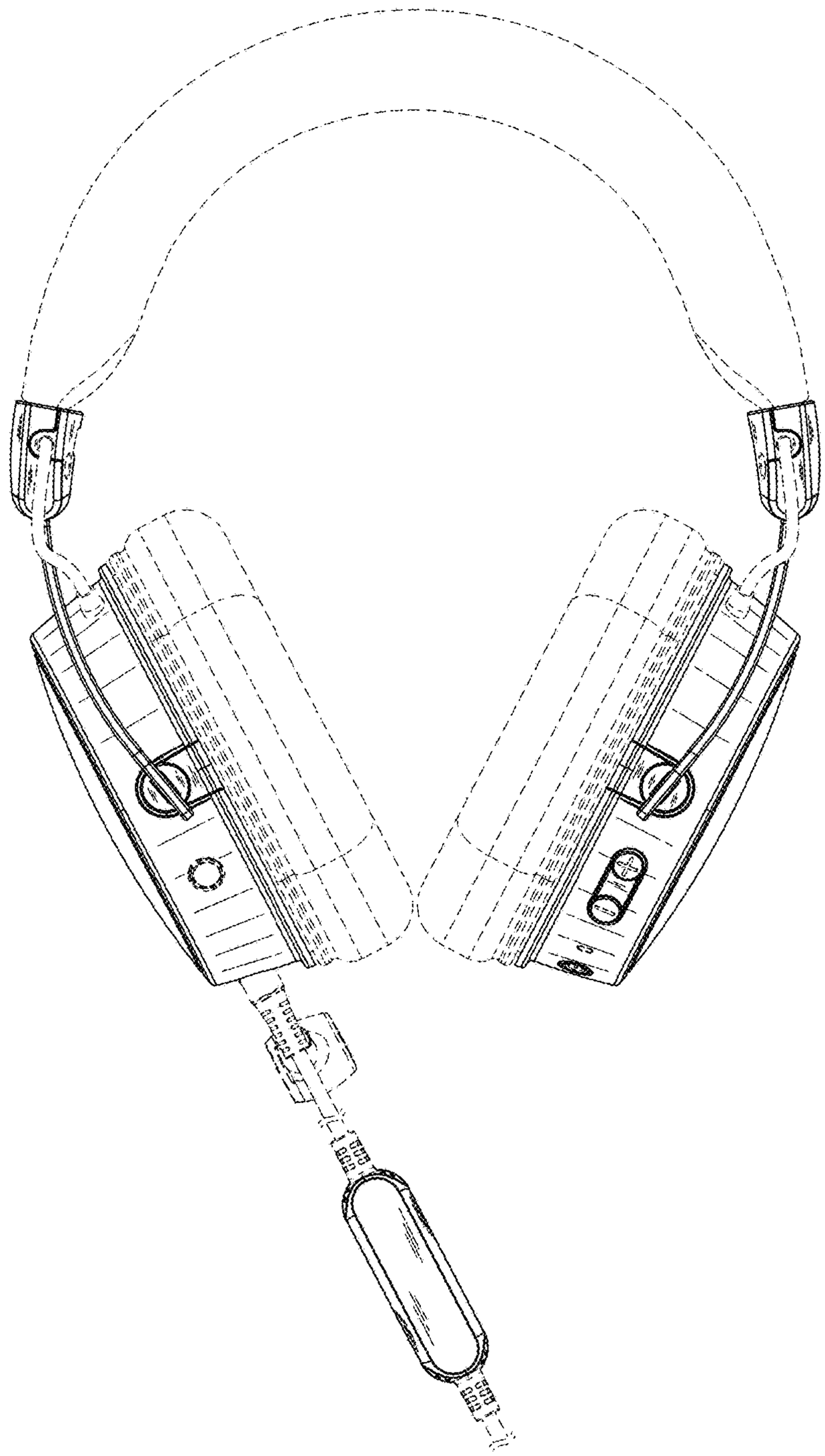

FIG. 5

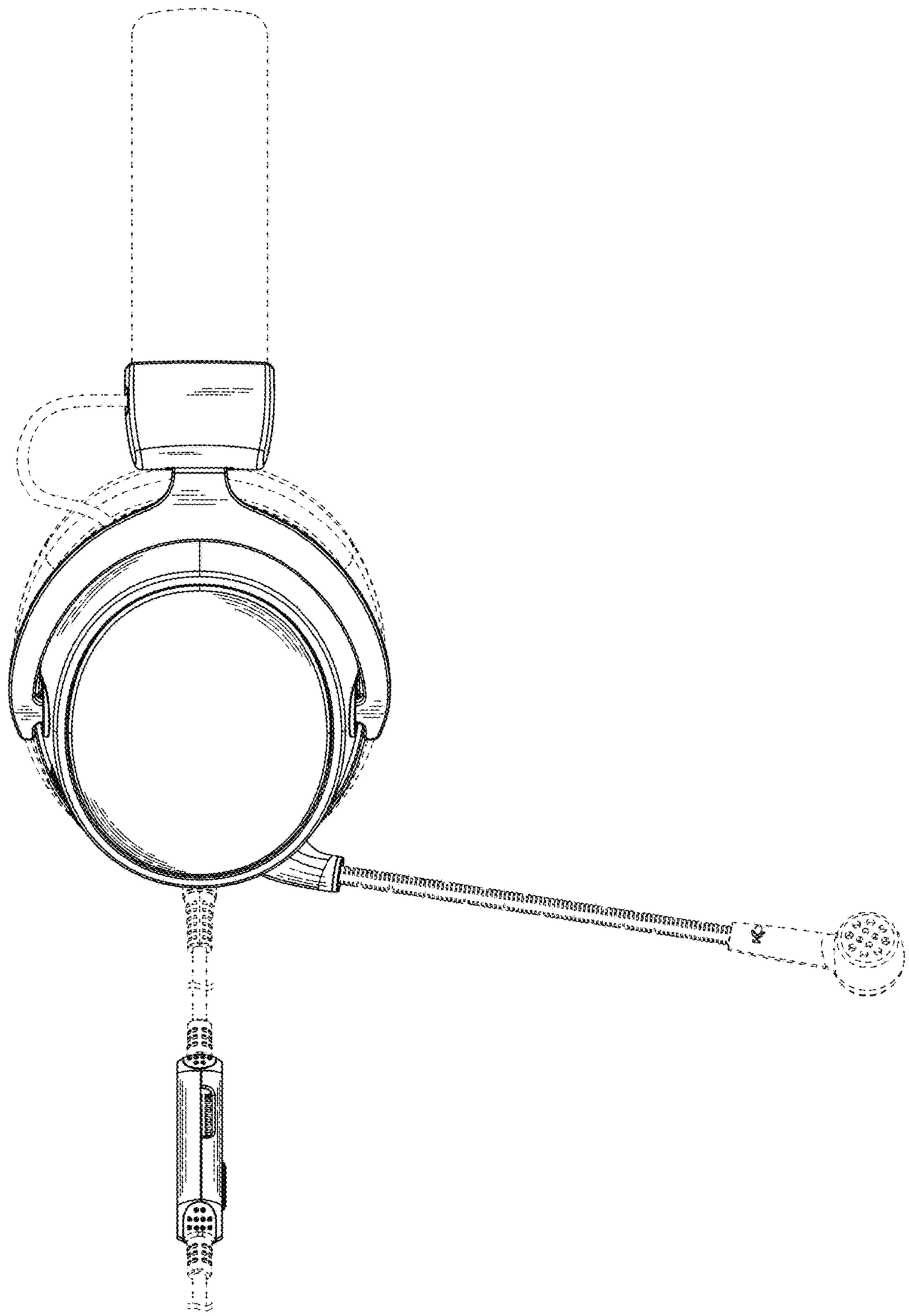

FIG. 6

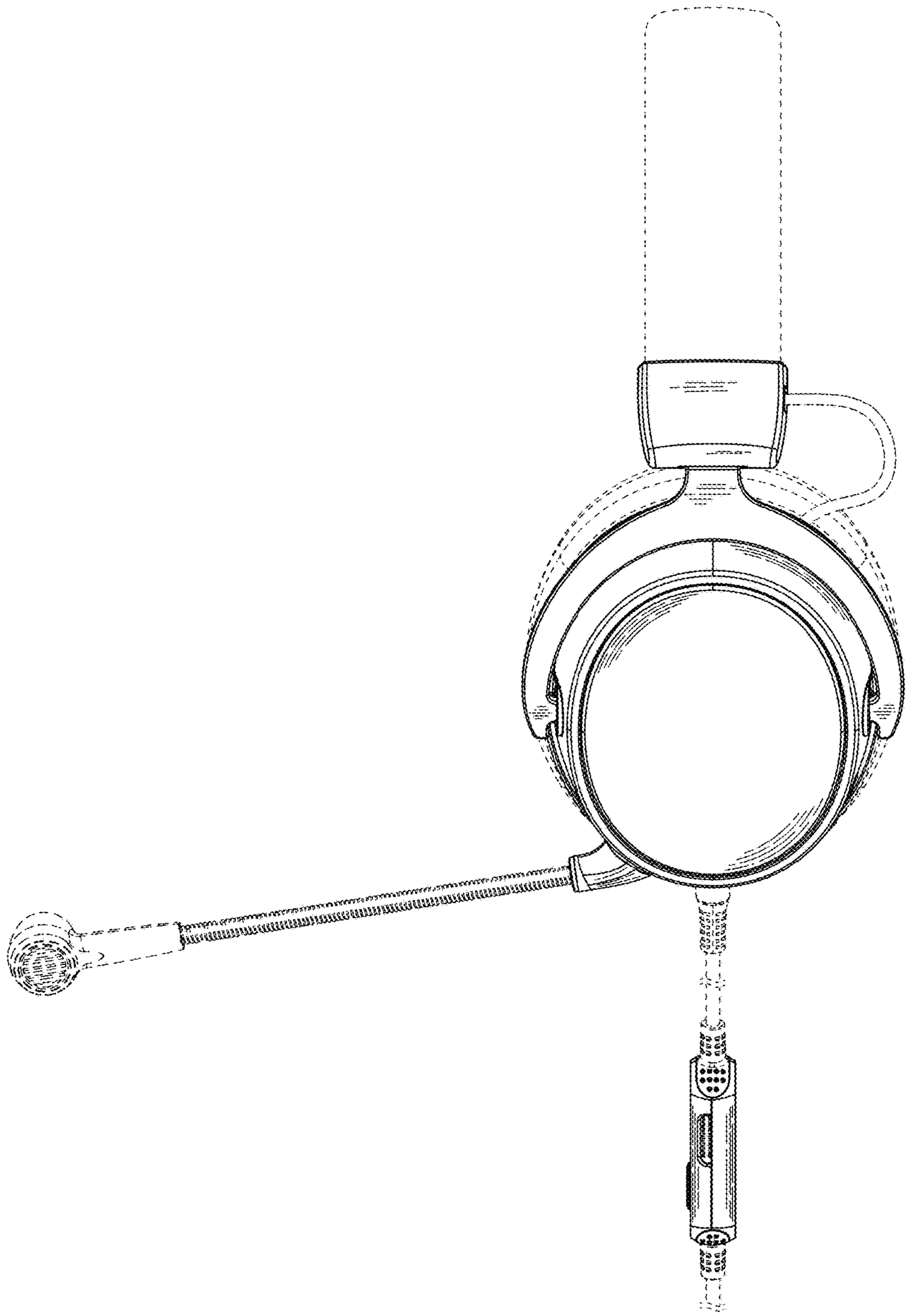

FIG. 7

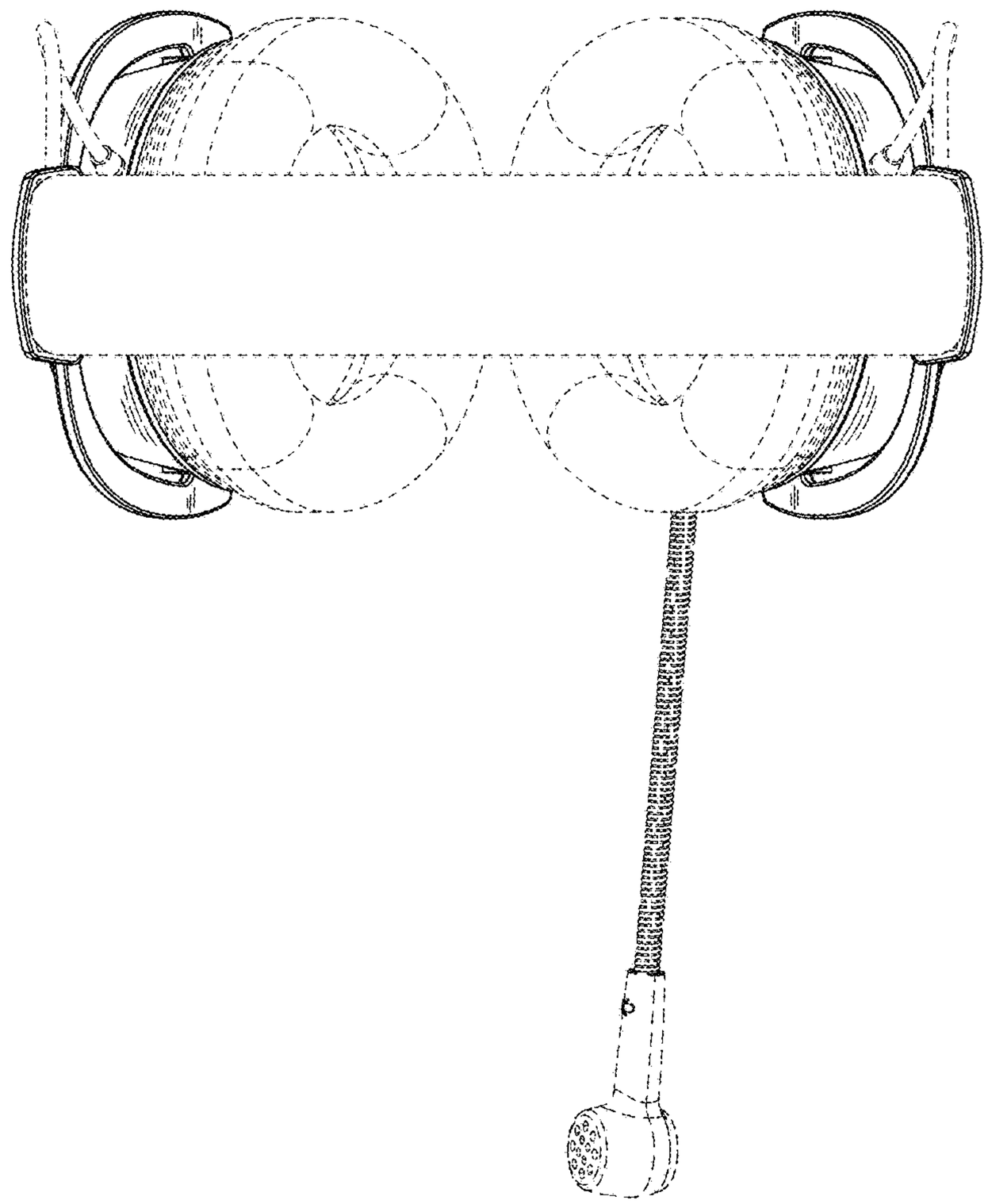

FIG. 8

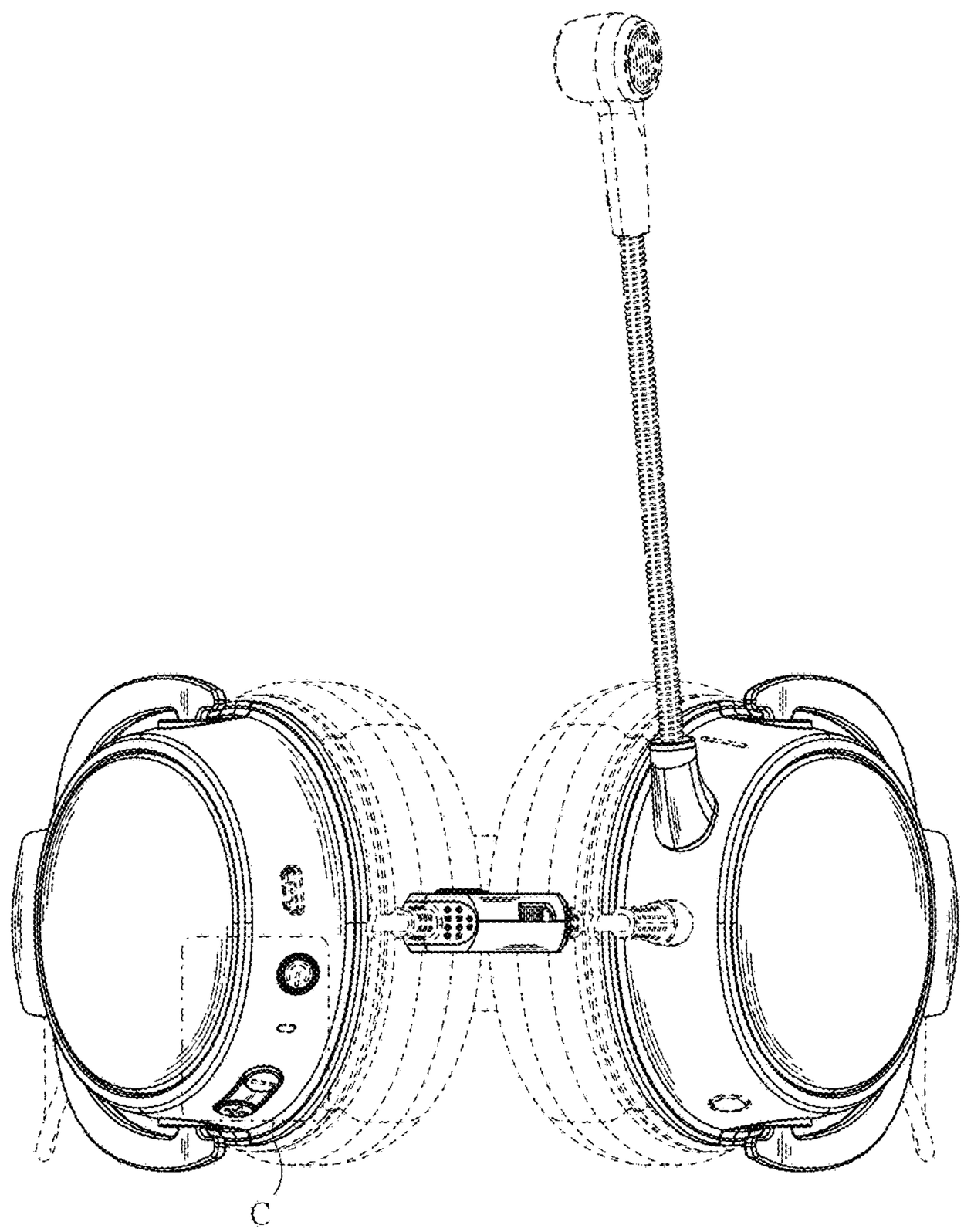

FIG. 9

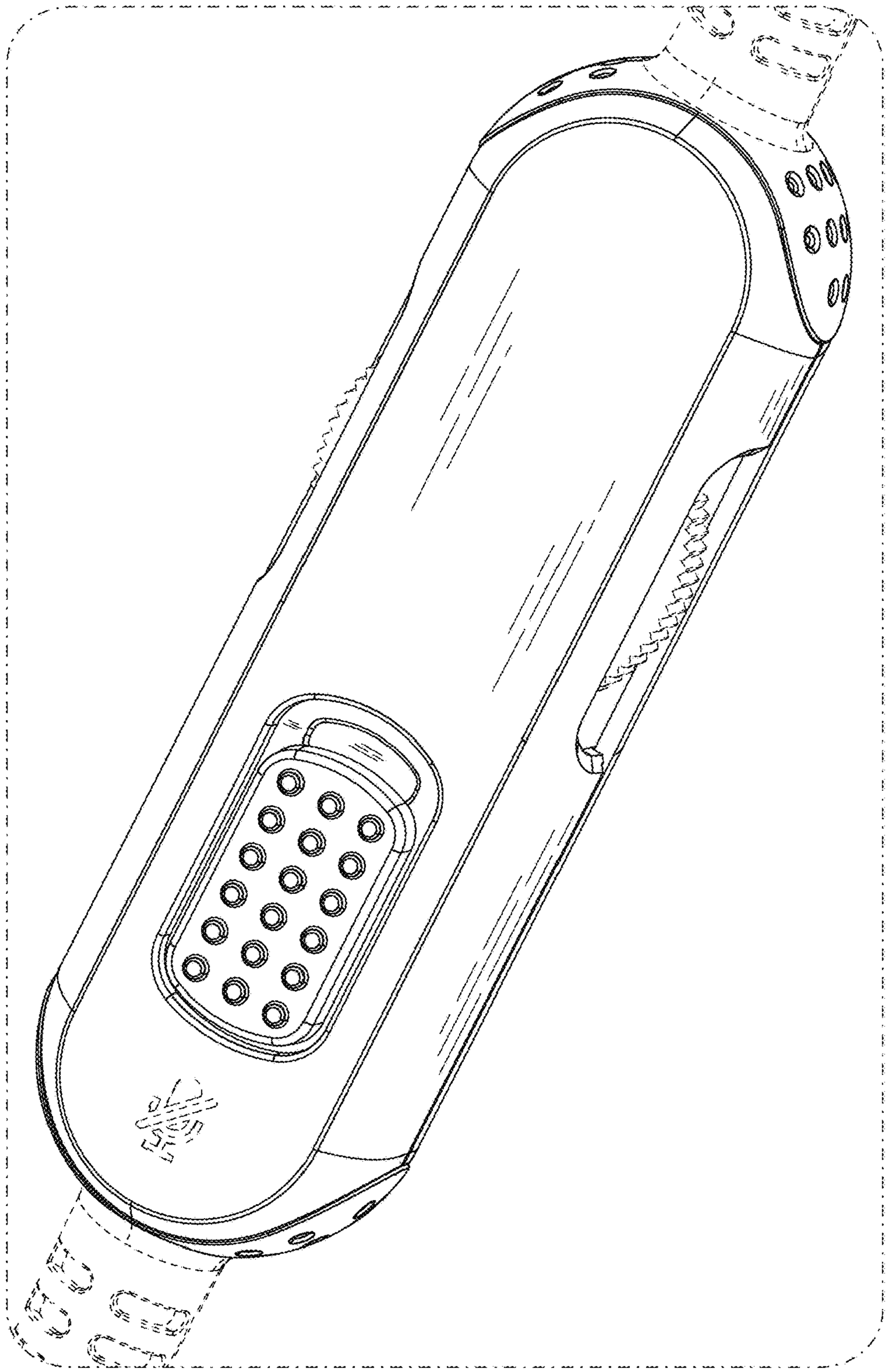

FIG. 10

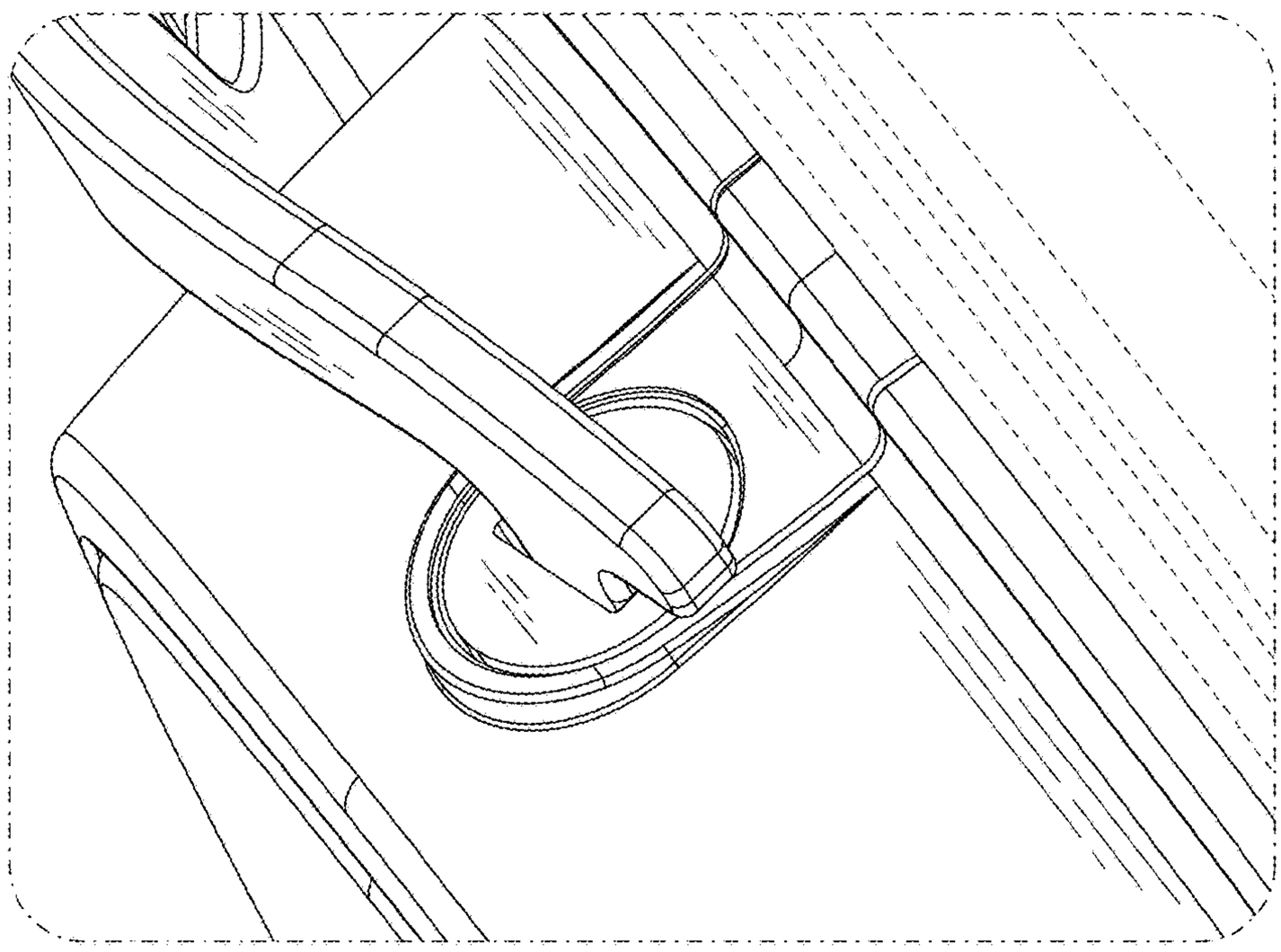

FIG. 11

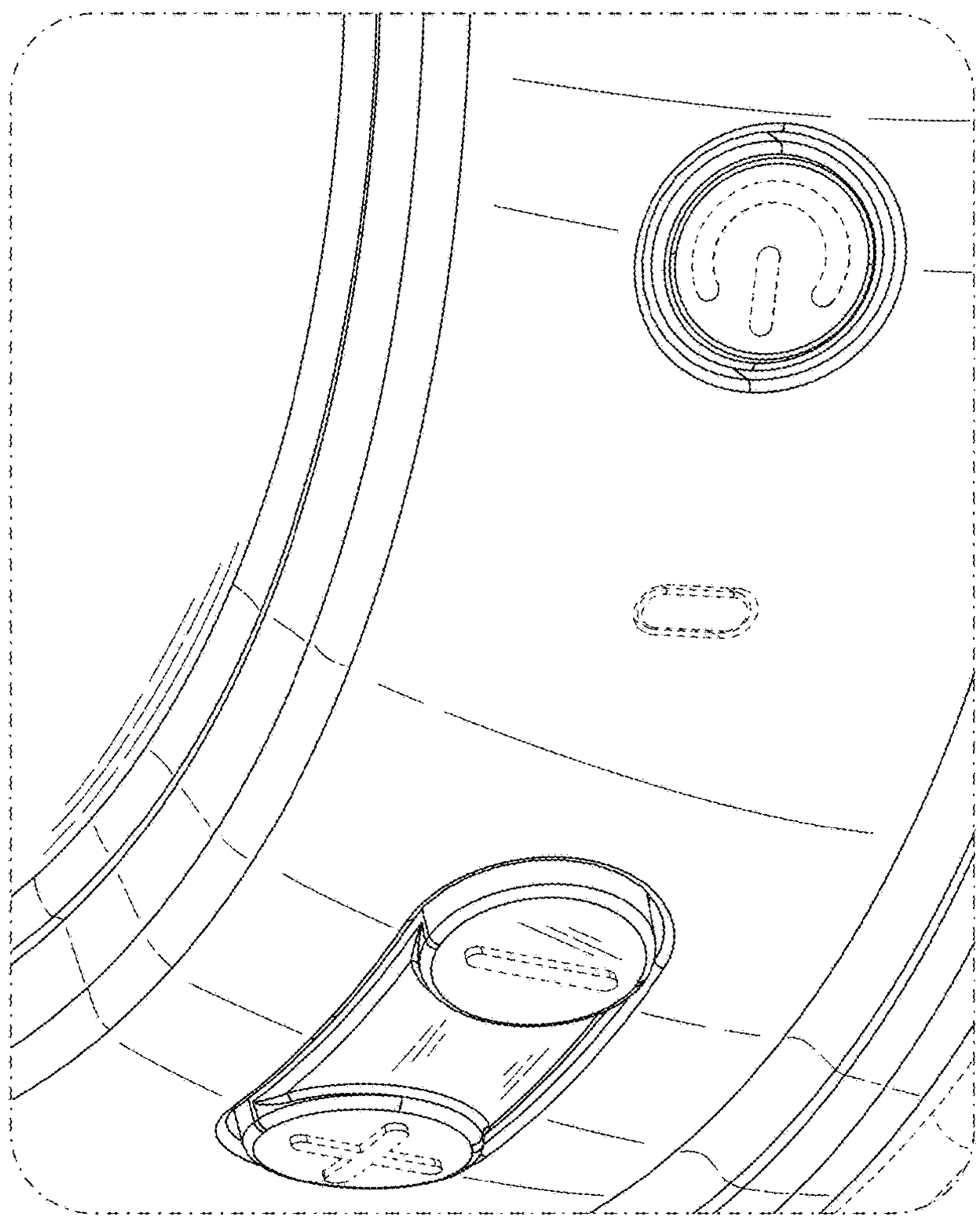

FIG. 12