US00D864389S

(12) United States Design Patent

Crawford et al.

(10) Patent No.: US D864,389 S
(45) Date of Patent: ** *Oct. 22, 2019

(54) **PEDICLE PROBE FOR USE WITH A SURGICAL ROBOTIC SYSTEM**

(71) Applicant: **GLOBUS MEDICAL, INC.**, Audubon, PA (US)

(72) Inventors: **Neil Crawford**, Chandler, AZ (US); **Jeff Forsyth**, Cranston, RI (US); **Chris Major**, Santa Clara, CA (US); **Andrew Berkowitz**, Philadelphia, PA (US); **Norbert Johnson**, North Andover, MA (US)

(73) Assignee: **Globus Medical, Inc.**, Audubon, PA (US)

(*) Notice: This patent is subject to a terminal disclaimer.

(**) Term: **15 Years**

(21) Appl. No.: **29/625,716**

(22) Filed: **Nov. 13, 2017**

(51) **LOC (12) Cl.** **24-02**

(52) **U.S. Cl.**
USPC **D24/140**

(58) **Field of Classification Search**
USPC D8/300, 307–310; D15/132, 142; D24/140, 108, 112, 128, 133, 137, 138, D24/155, 234
CPC .. A61F 2002/30471; A61F 2002/30565; A61F 2002/4615; A61F 2002/4623; A61F 2002/4627; A61F 2002/4632; A61F 2002/4635; A61F 2002/4668; A61F 2002/687; A61F 2002/4475; A61F 2002/4465; A61F 2250/0006; A61F 2/4611
See application file for complete search history.

(56) **References Cited**

U.S. PATENT DOCUMENTS

7,547,307	B2 *	6/2009	Carson	A61B 17/154 606/87
7,643,862	B2 *	1/2010	Schoenefeld	A61B 90/36 600/407
9,161,799	B2 *	10/2015	Benson	A61B 17/1655
D761,428	S *	7/2016	Birkenbach	D24/140
D806,247	S *	12/2017	Kheradpir	D24/147
D816,838	S *	5/2018	Kheradpir	D24/140
D820,984	S *	6/2018	Kheradpir	D24/140
D828,561	S *	9/2018	Kheradpir	D24/147

(Continued)

OTHER PUBLICATIONS

Globus Medical Excelsius Precruiting, Jan. 5, 2017, [online], [site visited Jan. 11, 2019]. Retrieved from url:https://www.youtube.com/watch?v=TDX6kbOFlmM (Year: 2017).*

(Continued)

Primary Examiner — Jeffrey D Asch
Assistant Examiner — Tracey J Bell

(57) **CLAIM**

The ornamental design for a pedicle probe for use with a surgical robotic system, as shown and described.

DESCRIPTION

FIG. **1** shows a perspective view of a pedicle probe for use with a surgical robotic system showing our new design;
FIG. **2** shows a front view thereof;
FIG. **3** shows a rear view thereof;
FIG. **4** shows a side view thereof;
FIG. **5** shows another side view thereof;
FIG. **6** shows a top view thereof; and,
FIG. **7** shows a bottom view thereof.

(Continued)

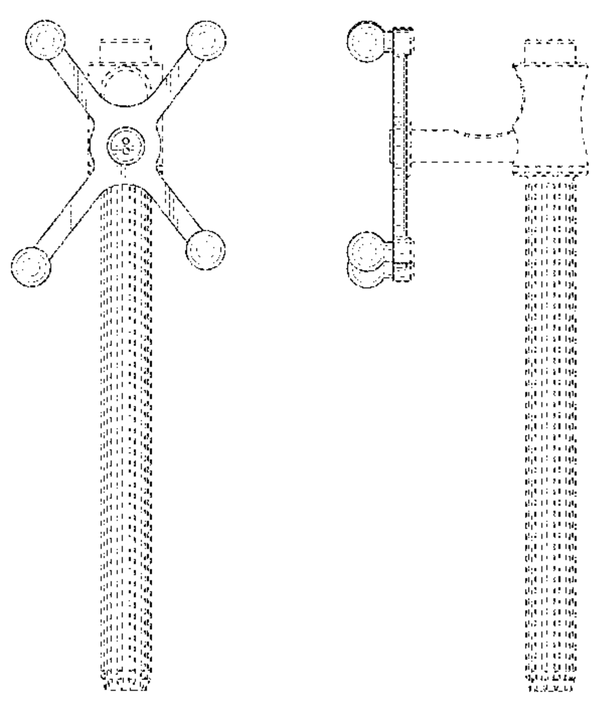

In the above drawings the broken lines and the areas within the broken lines form no part of the claimed design.

1 Claim, 7 Drawing Sheets

(56) **References Cited**

U.S. PATENT DOCUMENTS

2003/0069591	A1*	4/2003	Carson	A61B 17/154 606/130
2004/0167393	A1*	8/2004	Solar	A61B 90/39 600/414
2005/0113846	A1*	5/2005	Carson	A61F 2/461 606/130
2005/0124988	A1*	6/2005	Terrill-Grisoni	A61B 17/3403 606/53
2005/0137599	A1*	6/2005	Masini	A61B 90/36 606/79
2006/0142657	A1*	6/2006	Quaid	G06F 19/00 600/424
2015/0100129	A1*	4/2015	Waugh	A61F 2/4455 623/17.16
2016/0081681	A1*	3/2016	Waugh	A61B 17/0206 606/86 A
2017/0071691	A1*	3/2017	Crawford	A61B 90/96
2017/0119339	A1*	5/2017	Johnson	A61B 6/58
2017/0172669	A1*	6/2017	Berkowitz	A61B 34/20
2017/0209286	A1*	7/2017	Palmatier	A61F 2/4611
2017/0252114	A1*	9/2017	Crawford	A61B 17/17
2017/0360521	A1*	12/2017	Johnson	A61B 34/74
2018/0085233	A1*	3/2018	Palmatier	A61F 2/80
2018/0311051	A1*	11/2018	Donaldson	A61F 2/4611
2019/0000571	A1*	1/2019	Johnson	A61B 34/30

OTHER PUBLICATIONS

Medtronic revises indications for use of Navlock trackers following patient deaths, May 8, 2017, [online], [site visited Jan. 11, 2019]. Retrieved from url:https://spinalnewsinternational.com/medtronic-revises-indications-for-use-of-navlock-trackers-following-patient-deaths/ (Year: 2017).*

A Hands-on-Robot for Accurate Placement of Pedicle Screws, Ortmaier, Tobias, May 2006, [online], [site visited Jan. 11, 2019]. Retrieved from url:https://www.researchgate.net/publication/224998353_A_Hands-on-Robot_for_Accurate_Placement_of_Pedicle_Screws (Year: 2006).*

* cited by examiner

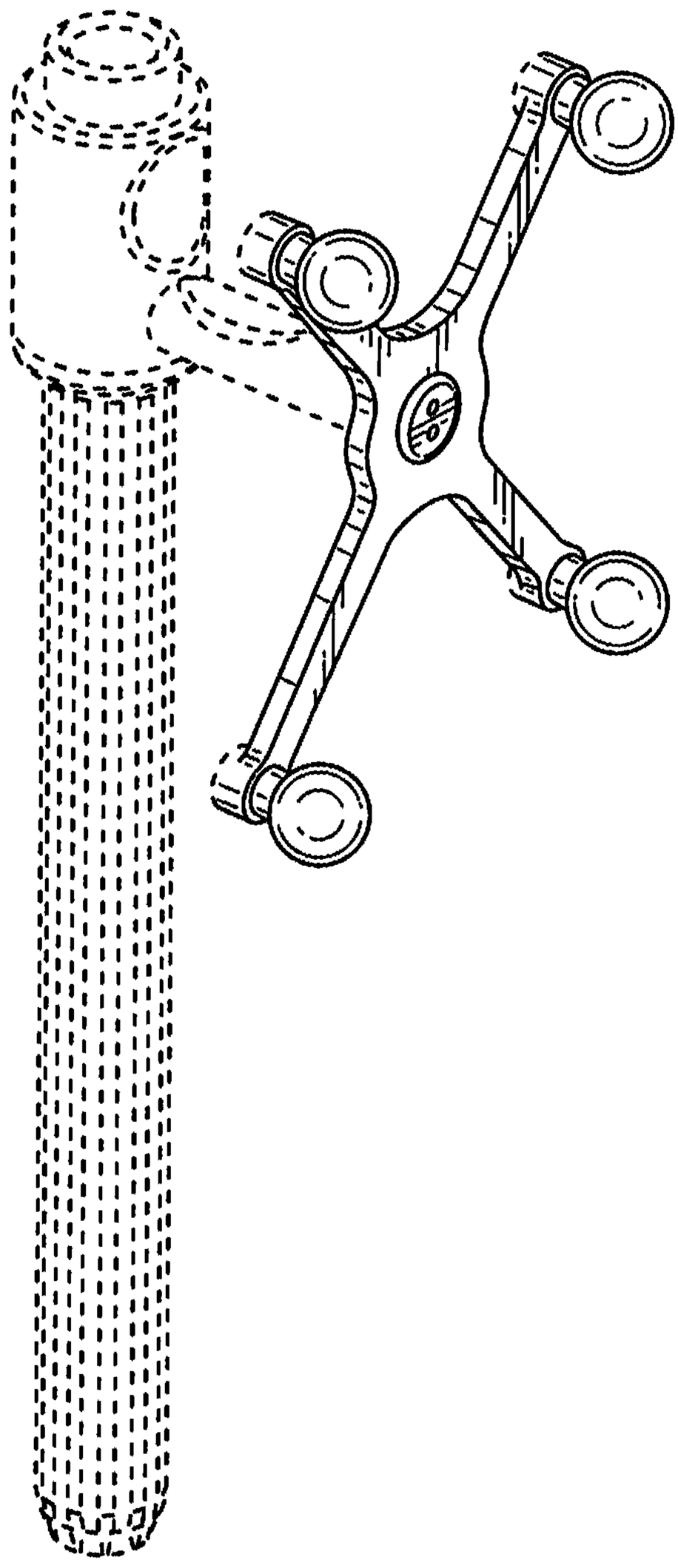

FIG. 1

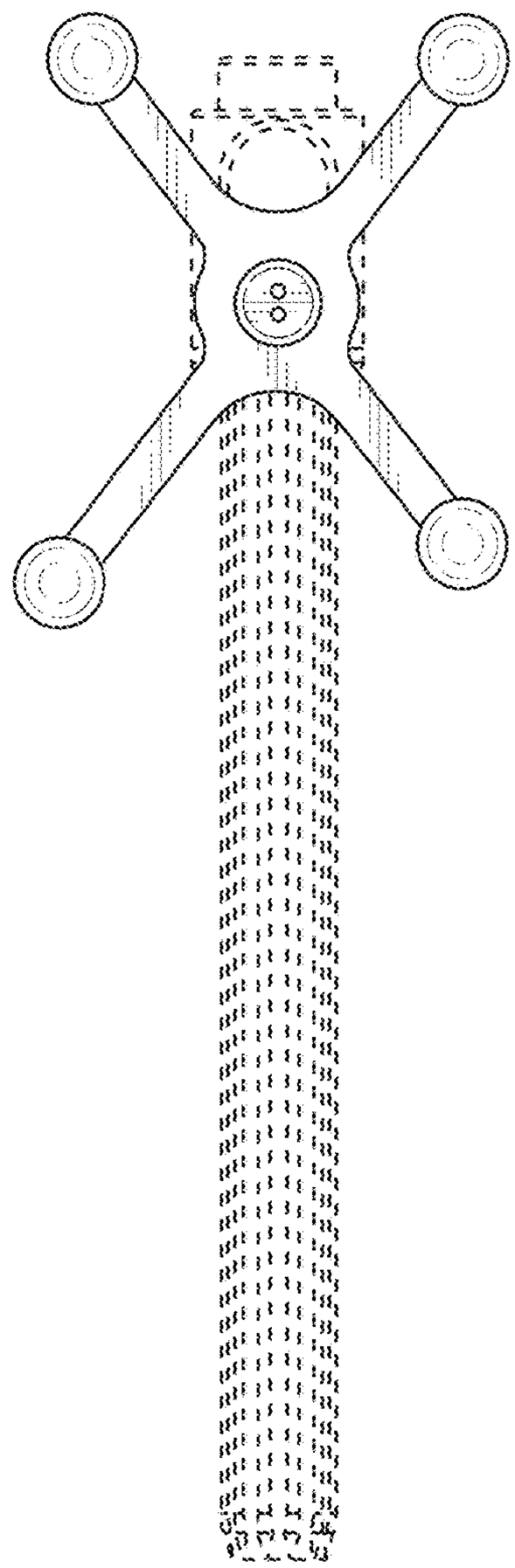

FIG. 2

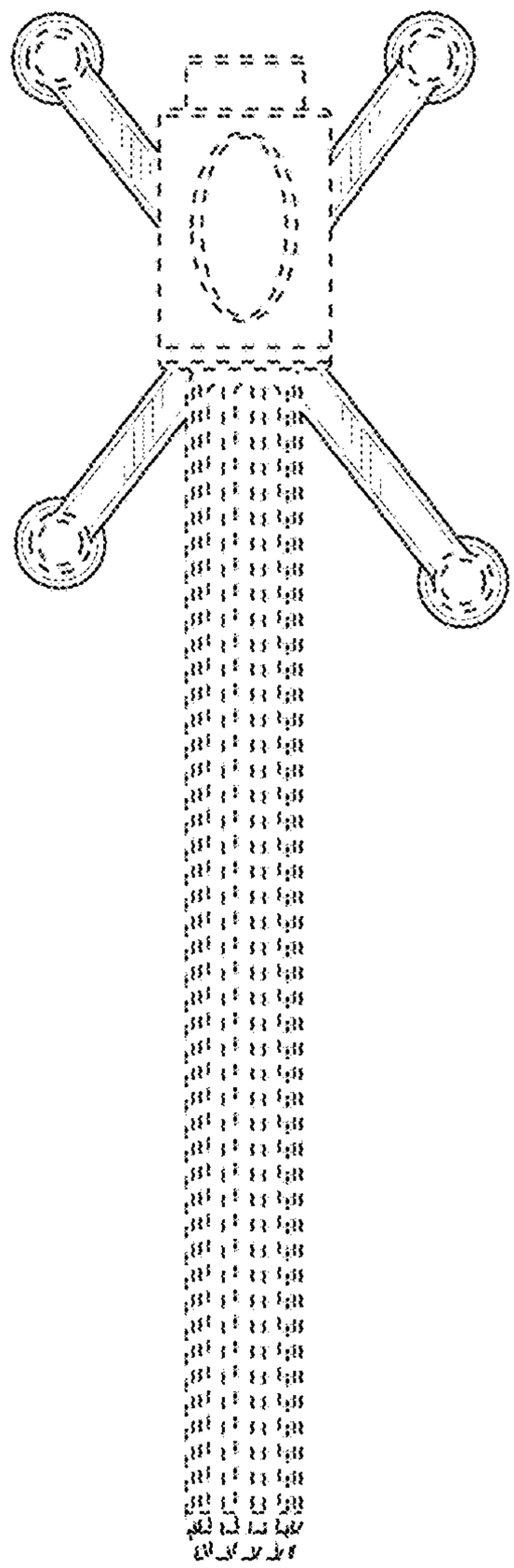

FIG. 3

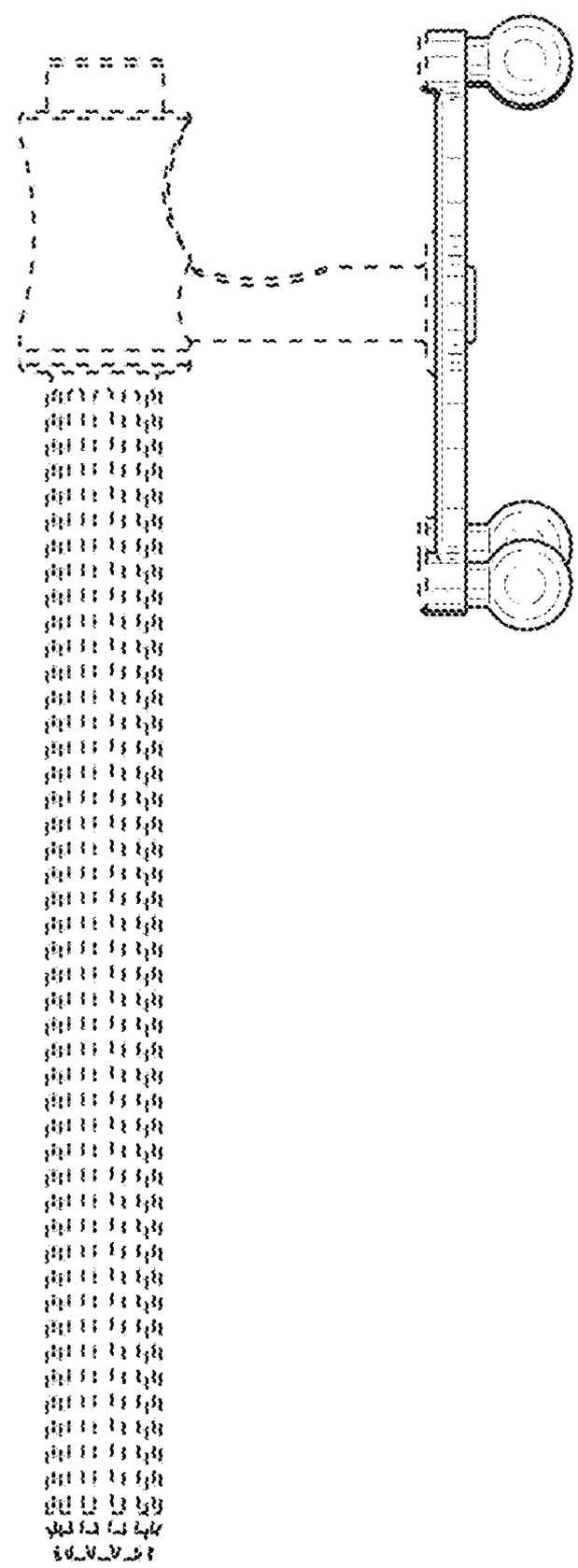

FIG. 4

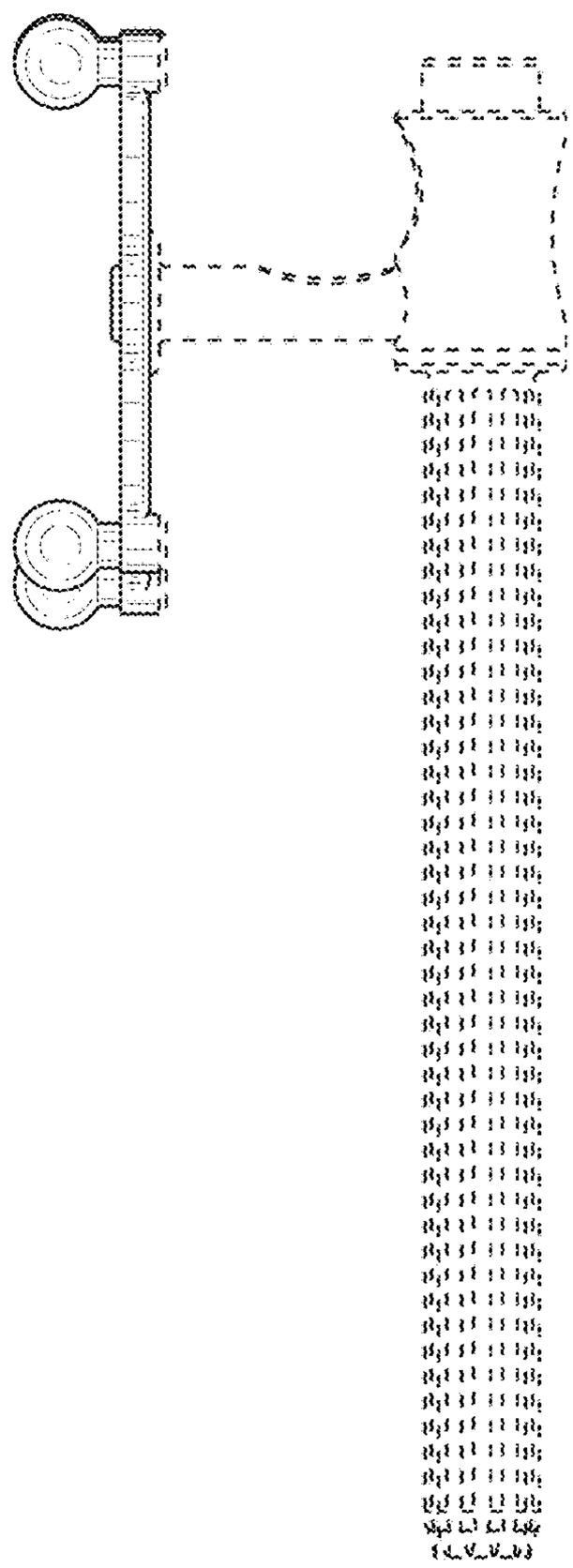

FIG. 5

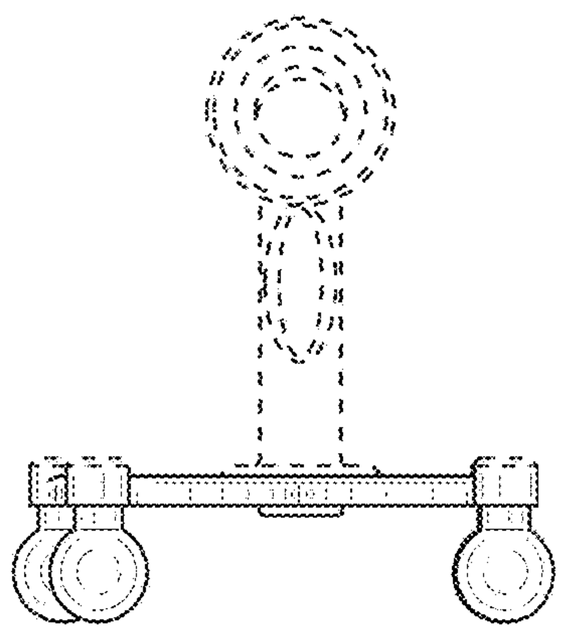

FIG. 6

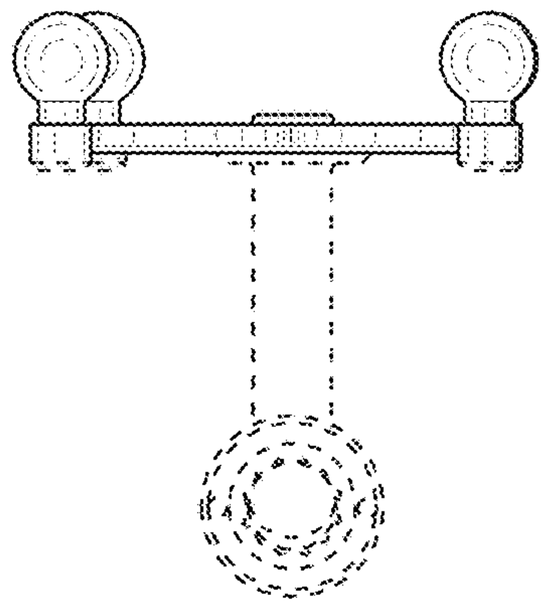

FIG. 7