US00D863593S

(12) United States Design Patent

Tsukii

(10) Patent No.: US D863,593 S
(45) Date of Patent: ** Oct. 15, 2019

(54) **CAR SHELTER**

(71) Applicant: **Toshikazu Tsukii**, Oro Valley, AZ (US)

(72) Inventor: **Toshikazu Tsukii**, Oro Valley, AZ (US)

(**) Term: **15 Years**

(21) Appl. No.: **29/675,029**

(22) Filed: **Dec. 28, 2018**

(51) **LOC (12) Cl.** **25-03**

(52) **U.S. Cl.**
USPC **D25/18**

(58) **Field of Classification Search**
USPC D25/1, 3–35, 56, 61
(Continued)

(56) **References Cited**

U.S. PATENT DOCUMENTS

2,297,175 A * 9/1942 Tarran E04B 1/3205 52/270
D138,436 S * 8/1944 Clark D25/18
(Continued)

Primary Examiner — Brett Miller
(74) *Attorney, Agent, or Firm* — Eugene Vamos

(57) **CLAIM**

The ornamental design for a car shelter, as shown and described.

DESCRIPTION

FIG. **1** is a front left perspective view of a first embodiment of a car shelter with the gate in an open position, showing my new design;
FIG. **2** is a front elevation view thereof;
FIG. **3** is a back elevation view thereof;
FIG. **4** is a right side elevation view thereof;
FIG. **5** is a left side elevation view thereof;
FIG. **6** is a top plan view thereof;
FIG. **7** is a front left perspective view of the first embodiment of the car shelter with the gate in a closed position;
FIG. **8** is a front elevation view thereof;
FIG. **9** is a back elevation view thereof;
FIG. **10** is a right side elevation view thereof;
FIG. **11** is a left side elevation view thereof;
FIG. **12** is a top plan view thereof;
FIG. **13** is a front left perspective view of a second embodiment of the car shelter with the gate in an open position;
FIG. **14** is a front elevation view thereof;
FIG. **15** is a back elevation view thereof;
FIG. **16** is a right side elevation view thereof;
FIG. **17** is a left side elevation view thereof;
FIG. **18** is a top plan view thereof;
FIG. **19** is a front left perspective view of the second embodiment of the car shelter with the gate in a closed position;
FIG. **20** is a front elevation view thereof;
FIG. **21** is a back elevation view thereof;
FIG. **22** is a right side elevation view thereof;
FIG. **23** is a left side elevation view thereof;
FIG. **24** is a top plan view thereof;
FIG. **25** is a front left perspective view of a third embodiment of the car shelter with the gate in an open position;
FIG. **26** is a front elevation view thereof;
FIG. **27** is a back elevation view thereof;
FIG. **28** is a right side elevation view thereof;
FIG. **29** is a left side elevation view thereof;
FIG. **30** is a top plan view thereof;
FIG. **31** is a front left perspective view of the third embodiment of the car shelter with the gate in a closed position;
FIG. **32** is a front elevation view thereof;
FIG. **33** is a back elevation view thereof;
FIG. **34** is a right side elevation view thereof;
FIG. **35** is a left side elevation view thereof; and,
FIG. **36** is a top plan view thereof.

1 Claim, 27 Drawing Sheets

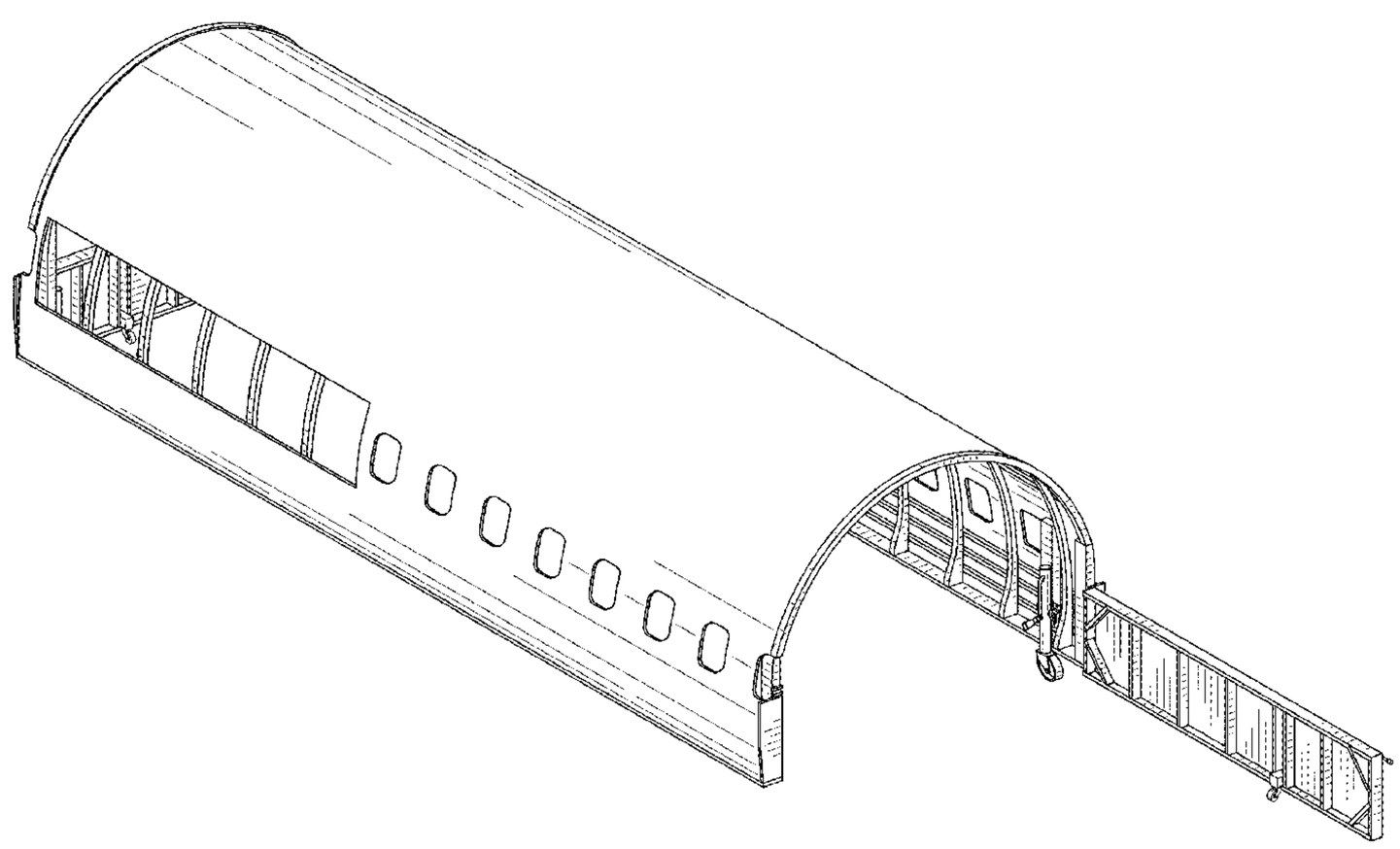

(58) **Field of Classification Search**
CPC E04H 1/00–1277; E04H 2001/1283; E04H 5/00–08; E04H 9/00; E04H 9/04–16; E04H 6/02–06; E04B 1/24; E04B 1/32–3205
See application file for complete search history.

(56) **References Cited**

U.S. PATENT DOCUMENTS

D139,082	S	*	10/1944	Larkin	D25/17
D152,968	S	*	3/1949	Hewlett	D25/17
2,728,115	A	*	12/1955	Cornelius	E04B 1/3448 D25/18
3,028,872	A	*	4/1962	Cresswell	A01G 9/1407 D25/18
3,154,888	A	*	11/1964	Graham	E04B 1/32 52/11
3,255,769	A	*	6/1966	Lloyd	A01G 9/14 135/138
3,572,002	A	*	3/1971	Nichols	E04B 1/3205 52/127.2
3,633,326	A	*	1/1972	McKnight	E04B 1/3205 52/245
D275,610	S	*	9/1984	Robertshaw	D25/18
D299,753	S	*	2/1989	Virgilio	D25/15
D430,306	S	*	8/2000	Goldwitz	D25/61
9,121,192	B2	*	9/2015	Hotes	E04H 15/02
D844,828	S	*	4/2019	Tsukii	D25/18
2013/0104947	A1	*	5/2013	Hotes	E04H 9/16 135/96
2017/0145680	A1	*	5/2017	Michaluk	E04B 1/3205

* cited by examiner

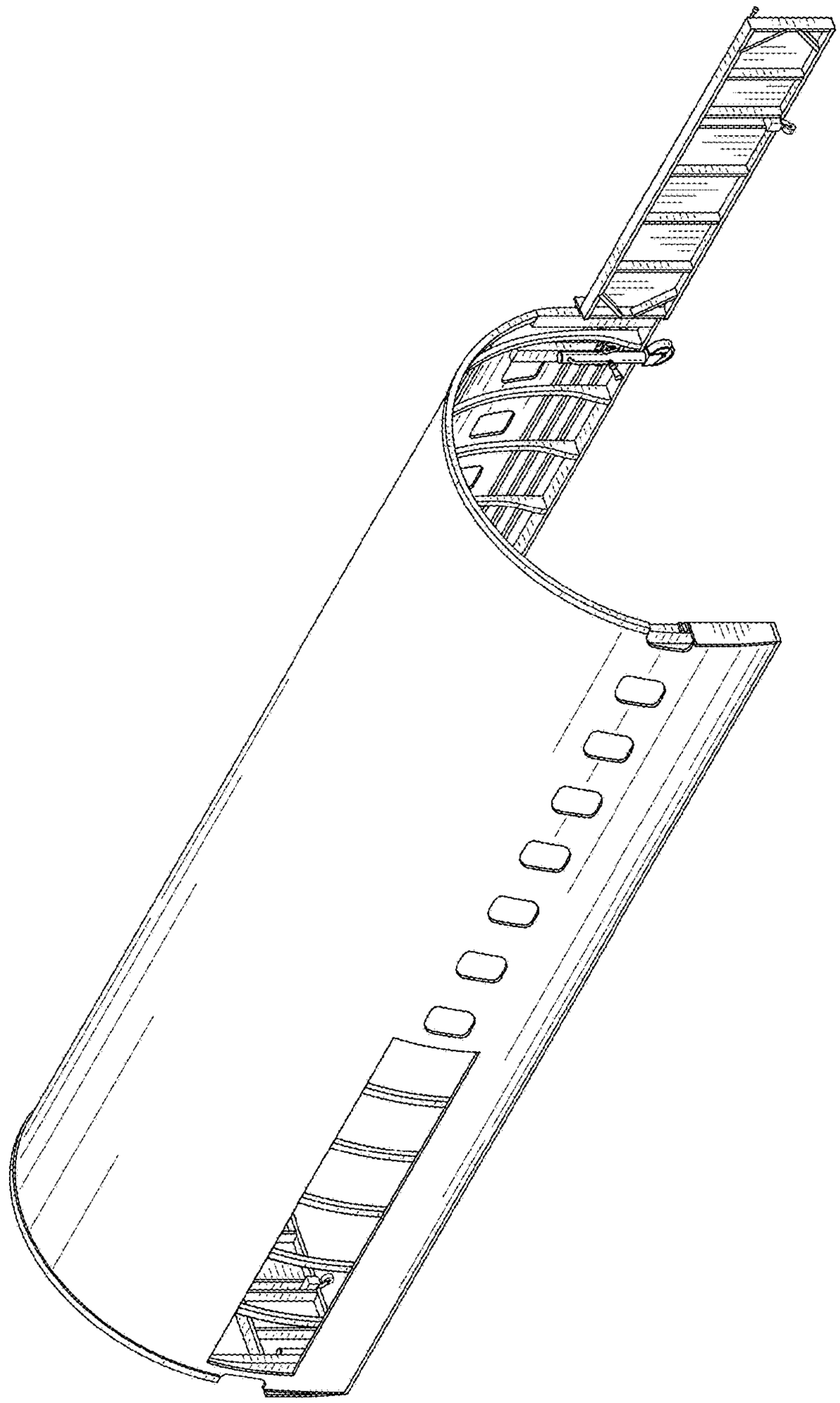

FIG. 1

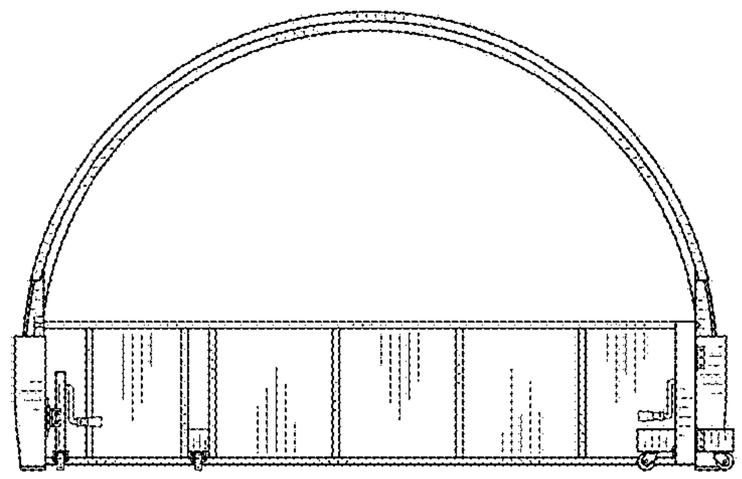

FIG. 2

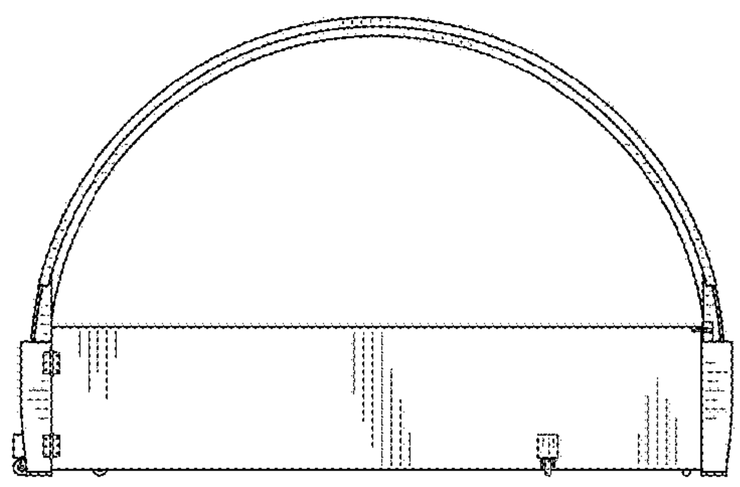

FIG. 3

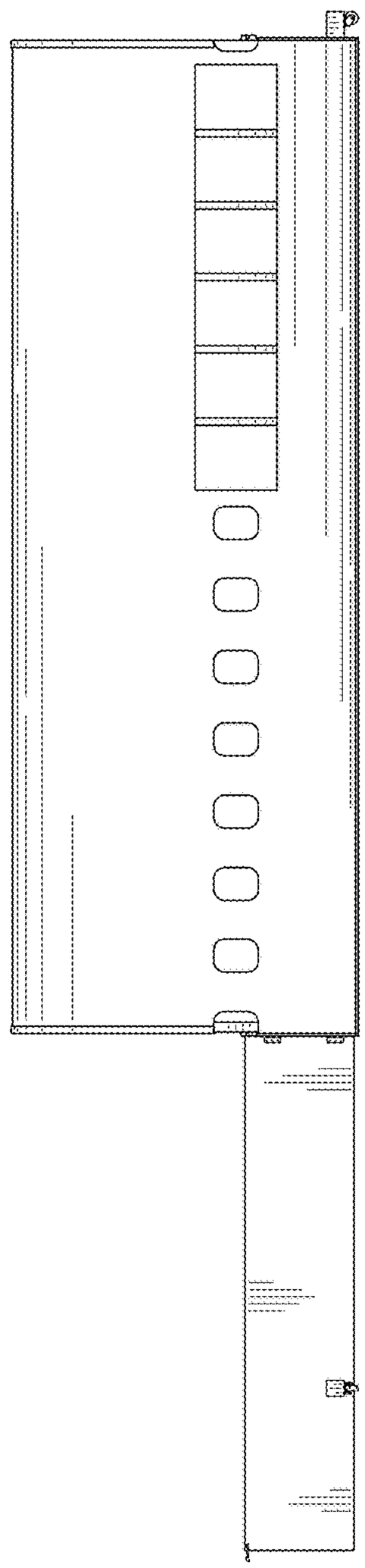

FIG. 4

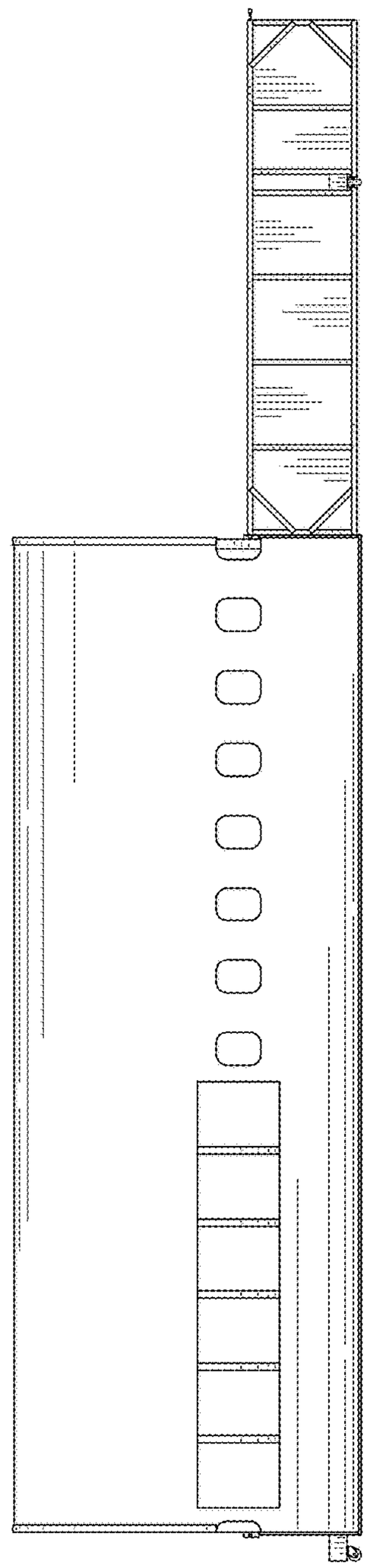

FIG. 5

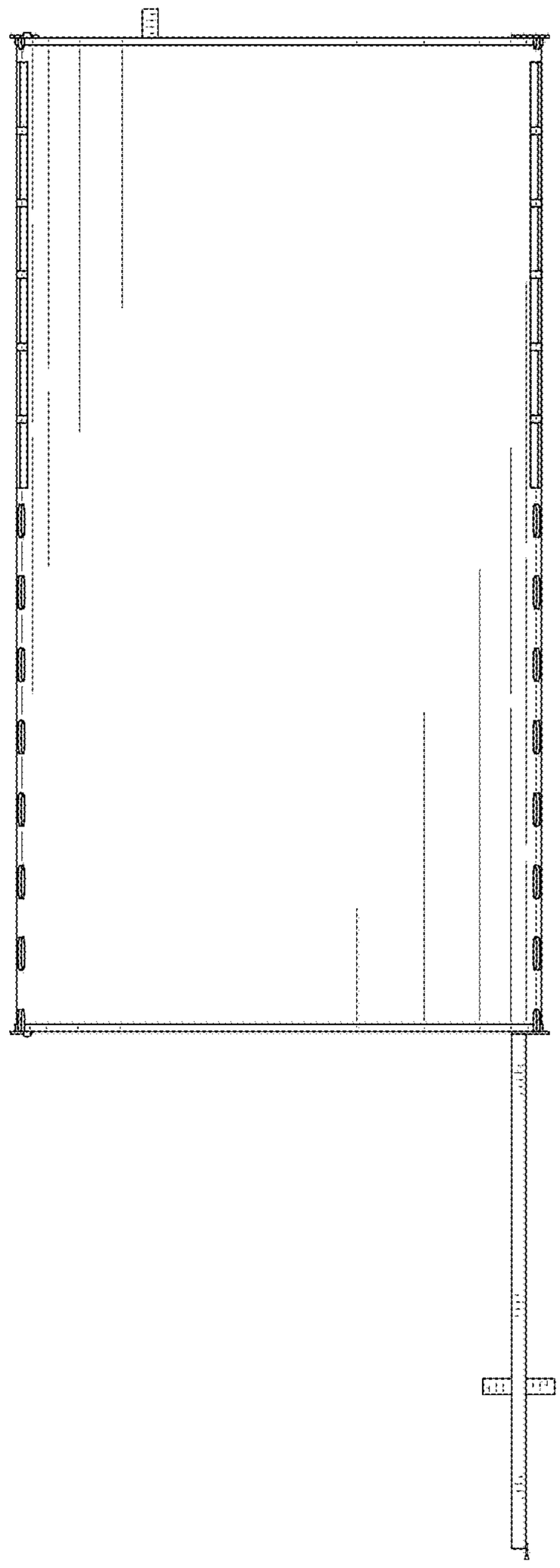

FIG. 6

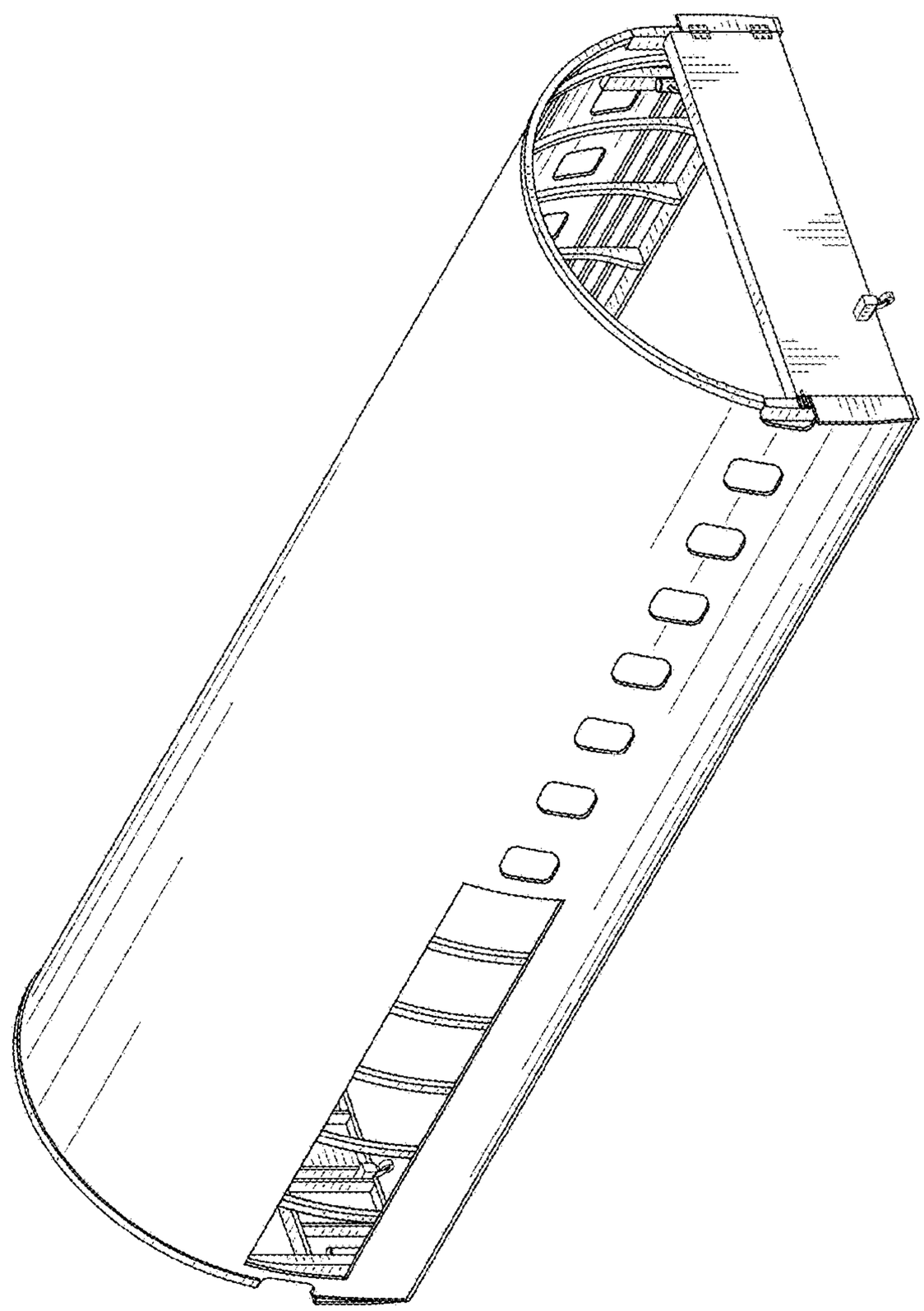

FIG. 7

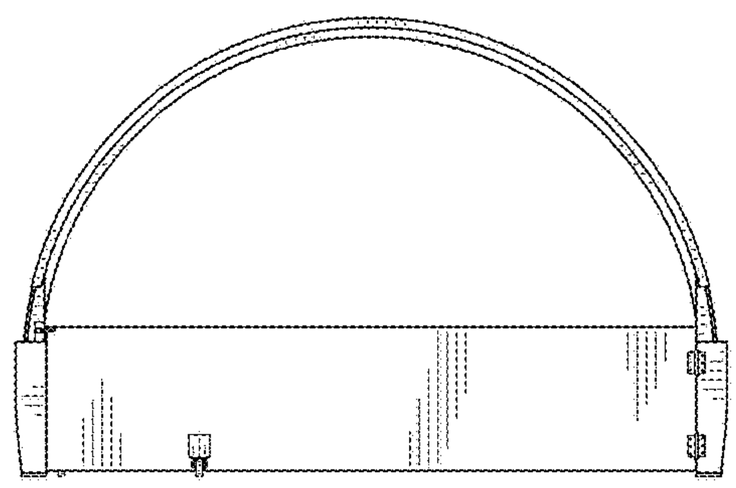

FIG. 8

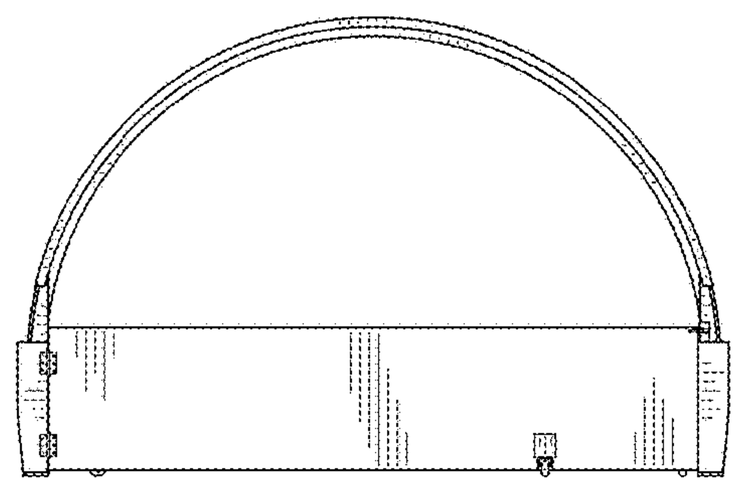

FIG. 9

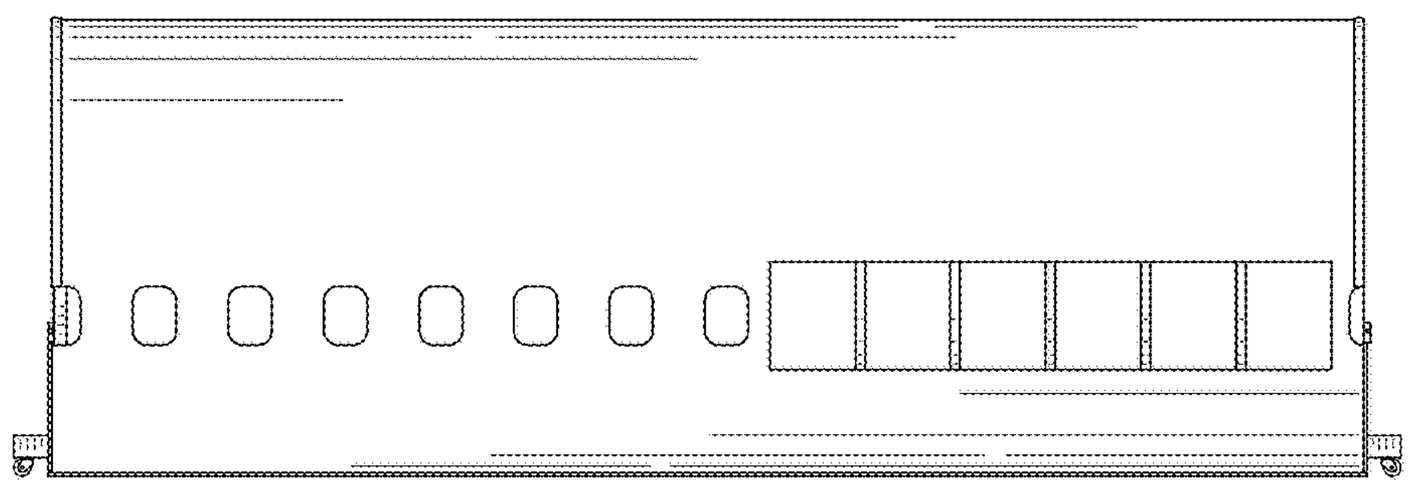

FIG. 10

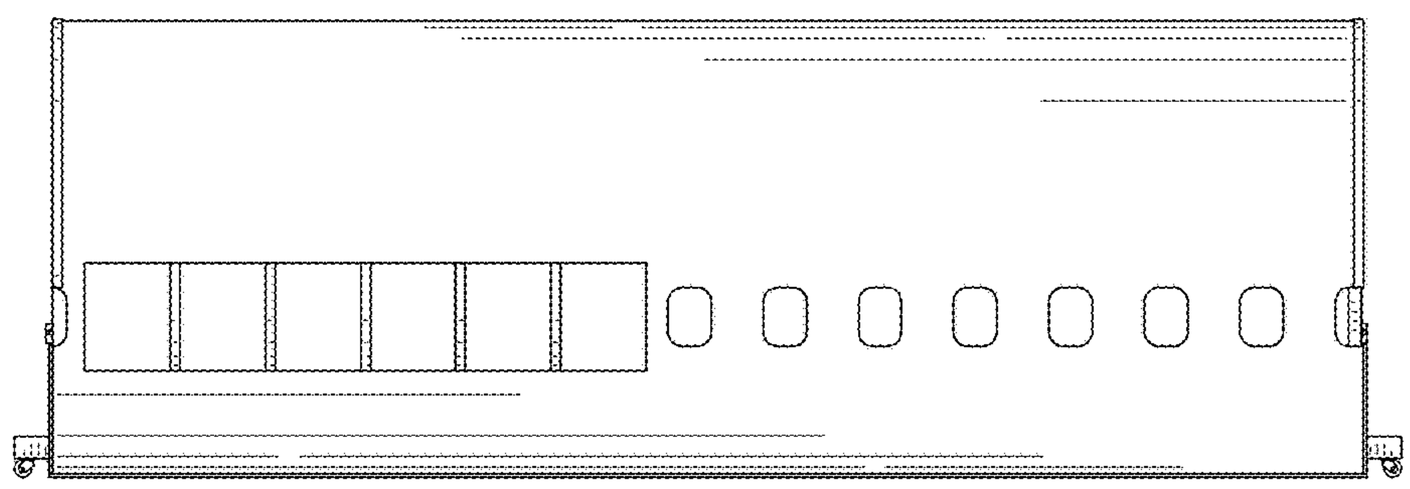

FIG. 11

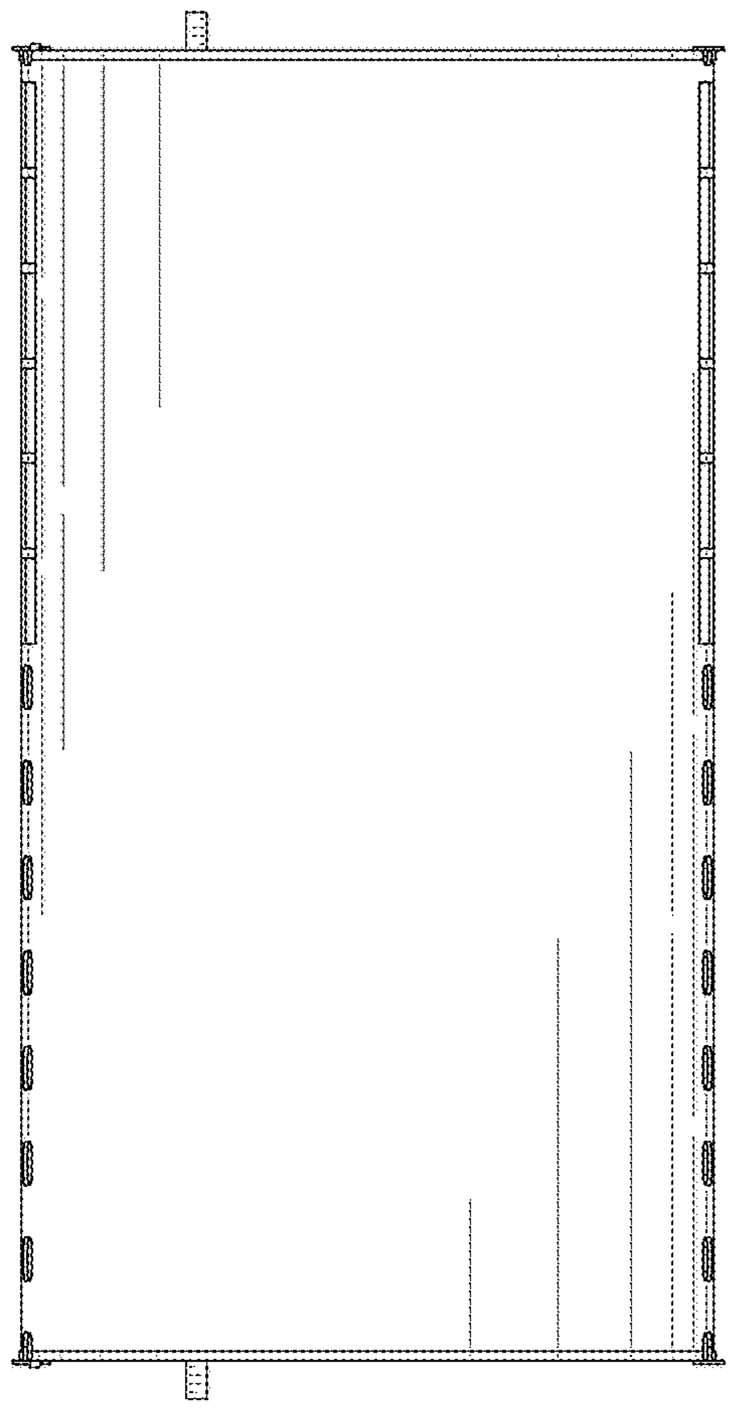

FIG. 12

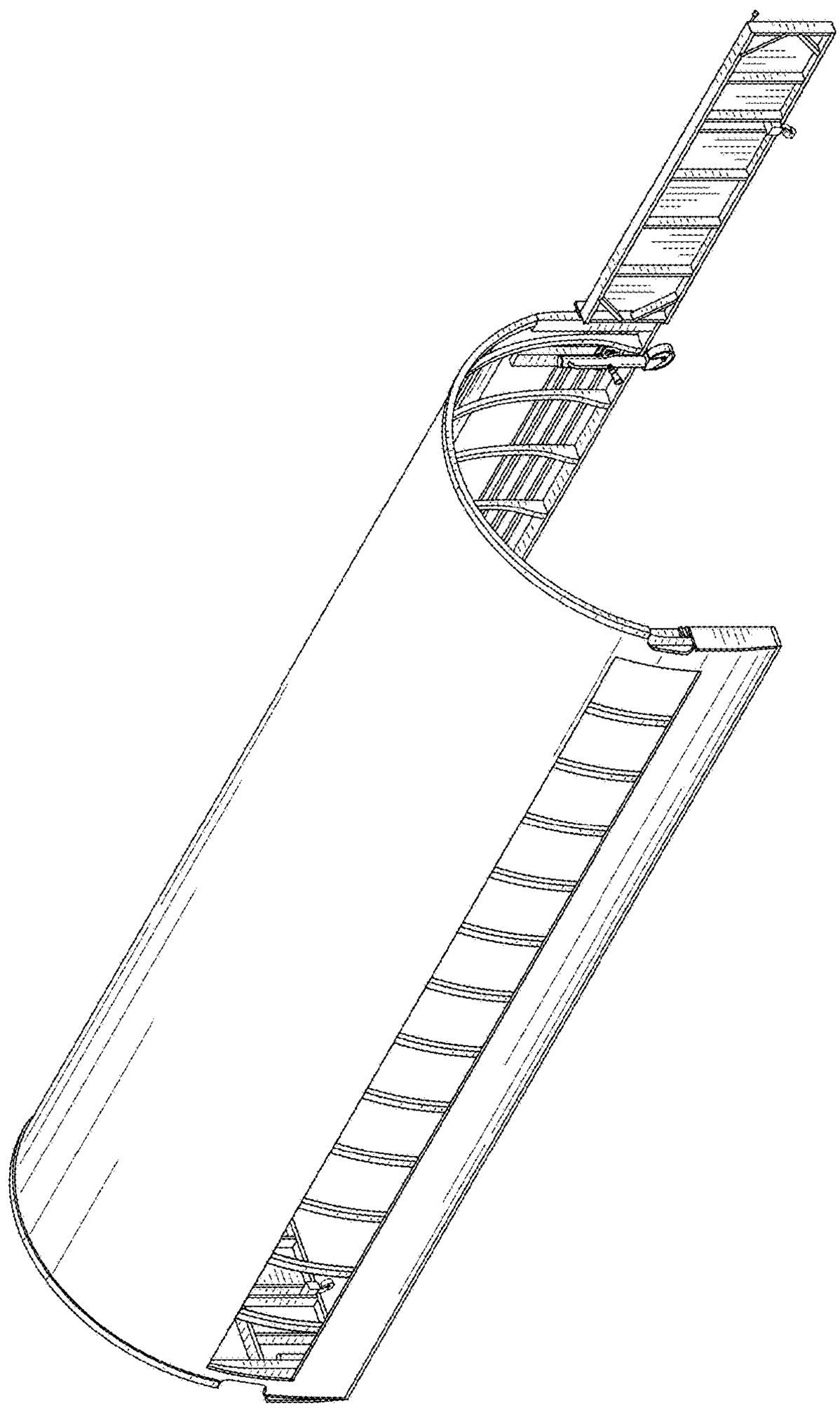

FIG. 13

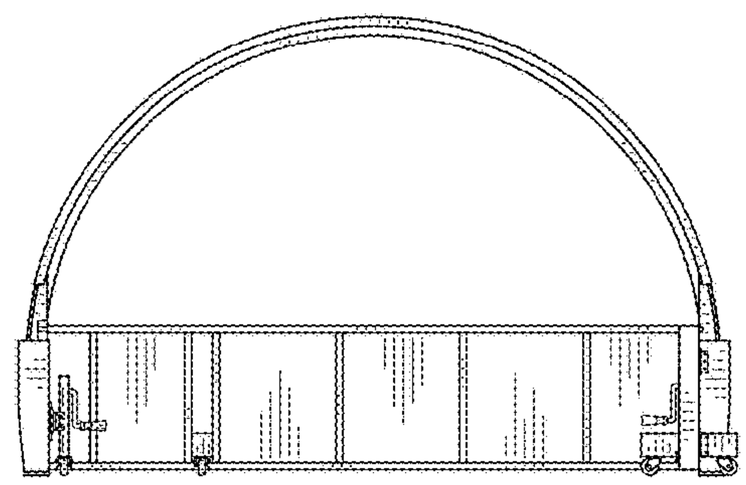

FIG. 14

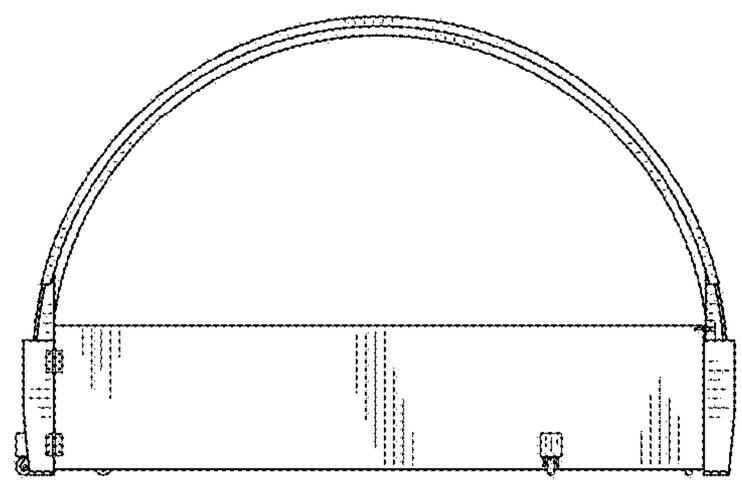

FIG. 15

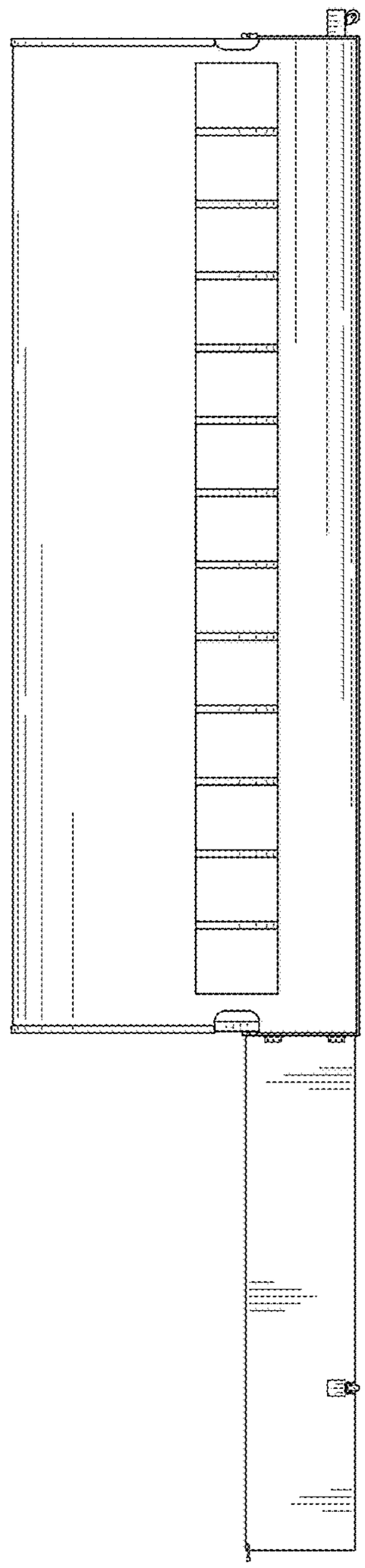

FIG. 16

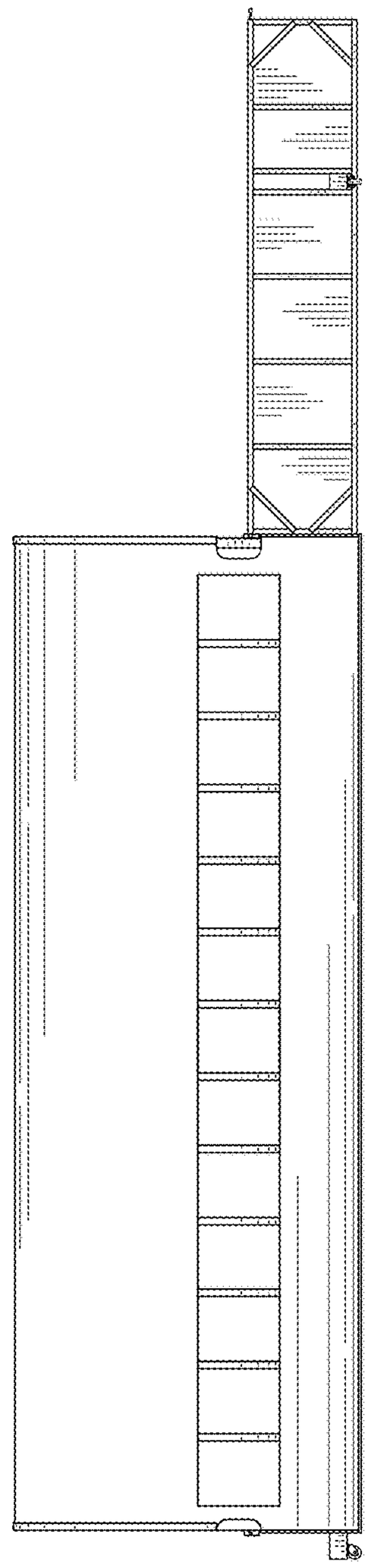

FIG. 17

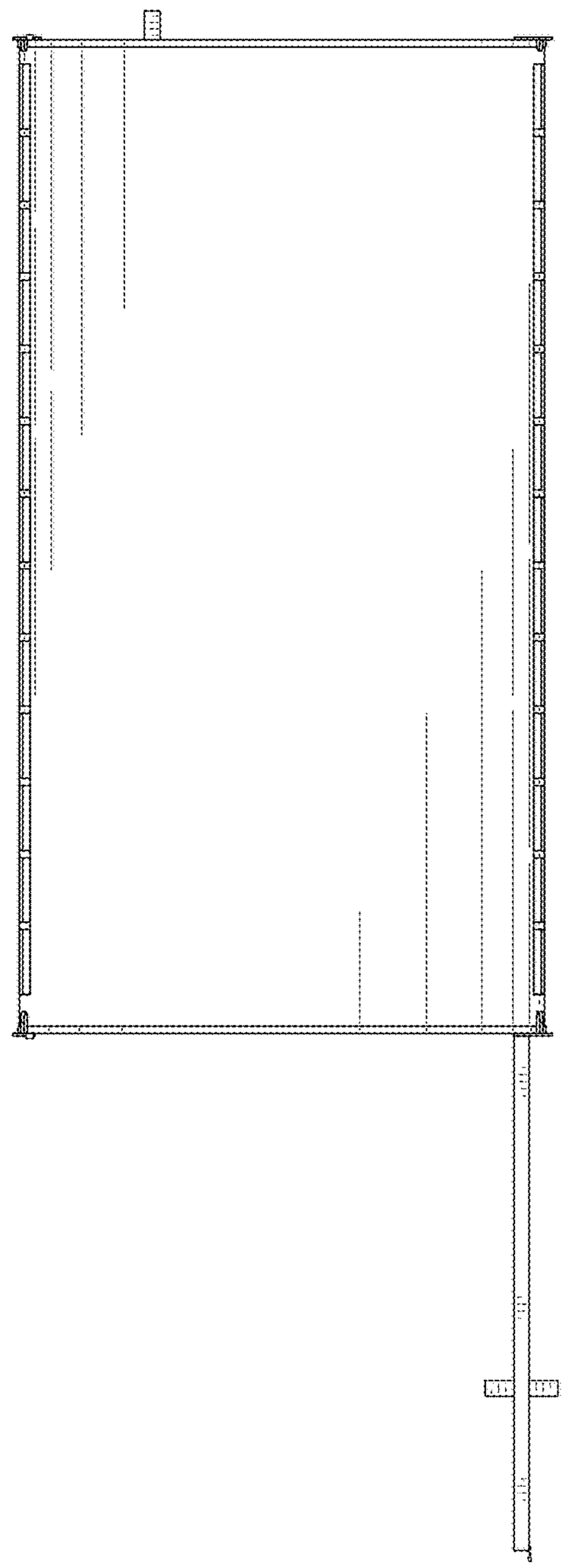

FIG. 18

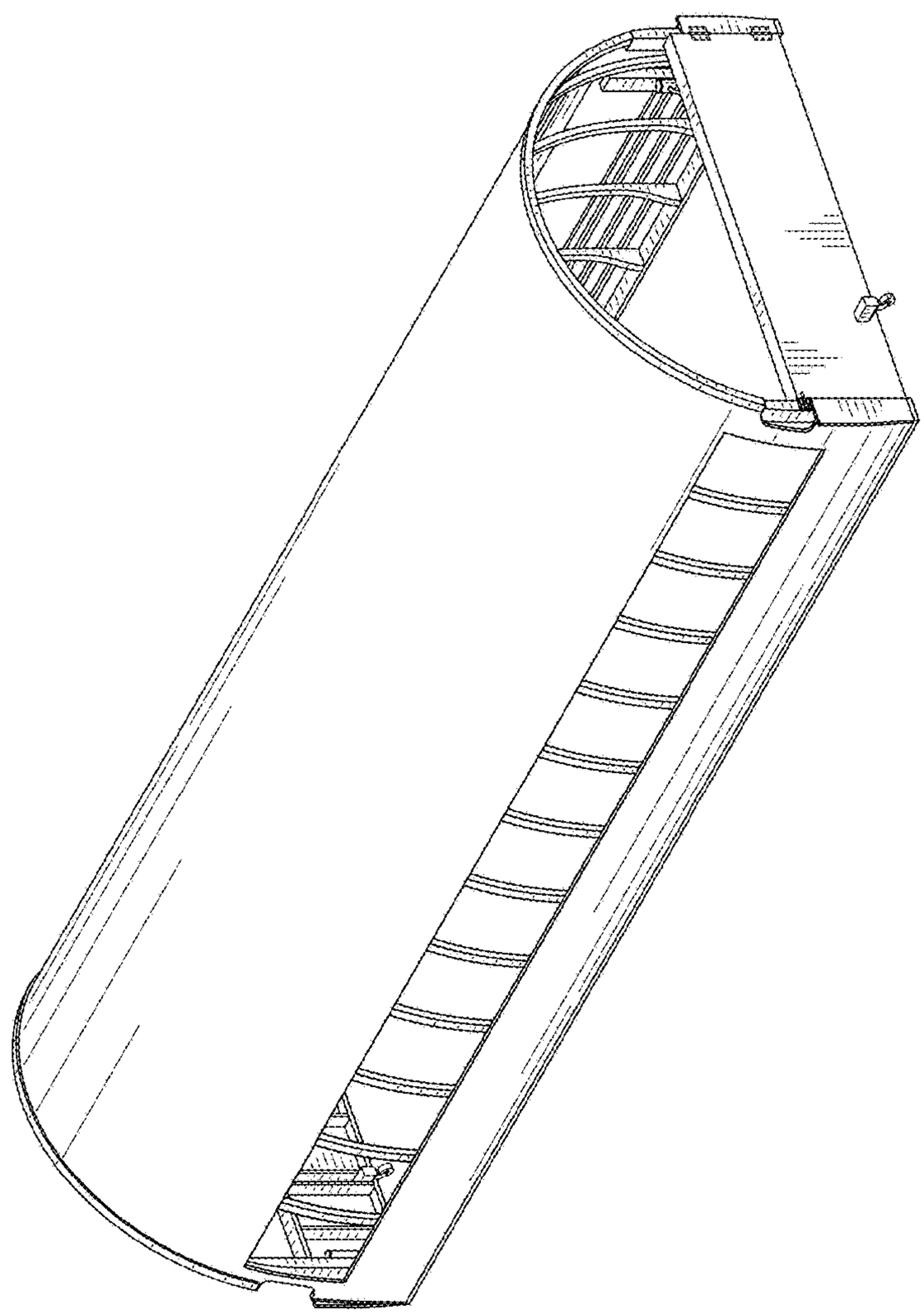

FIG. 19

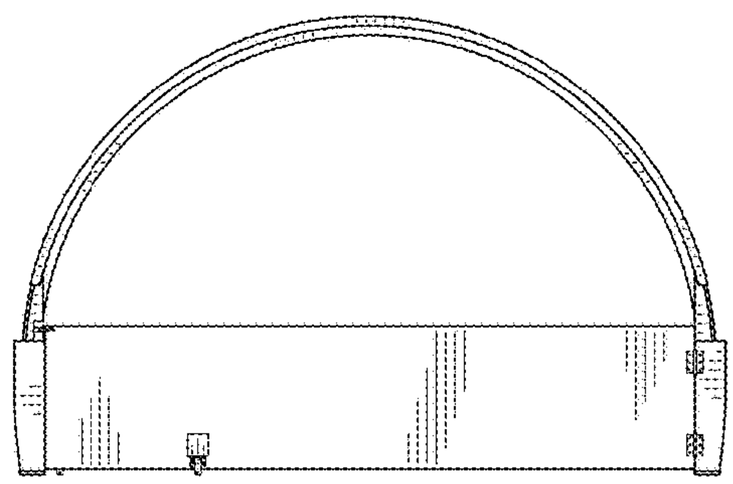

FIG. 20

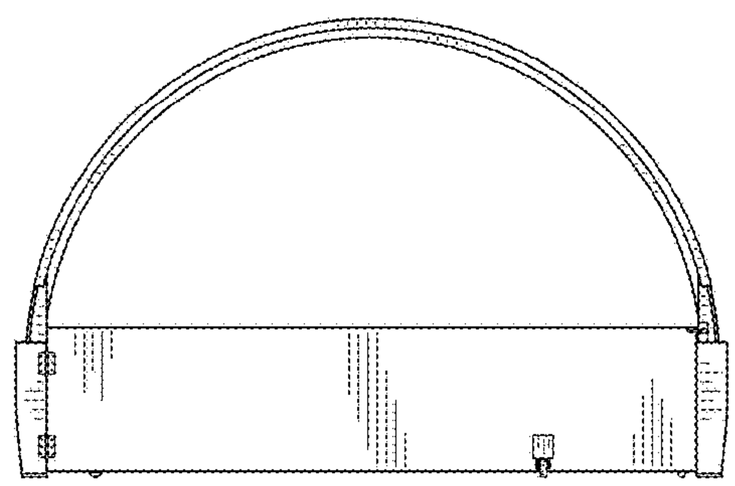

FIG. 21

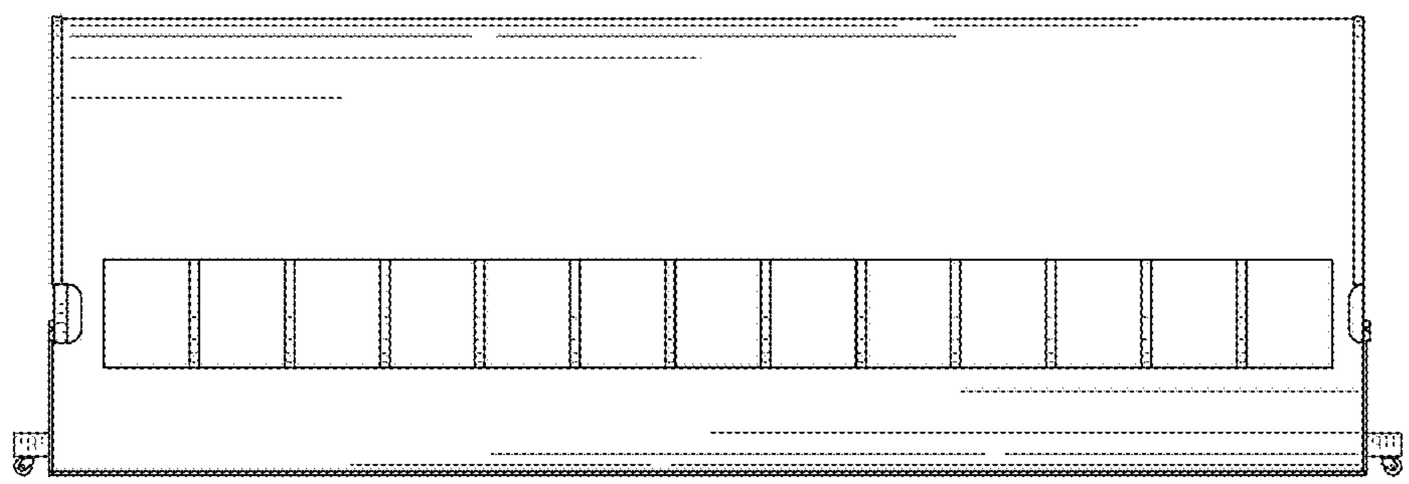

FIG. 22

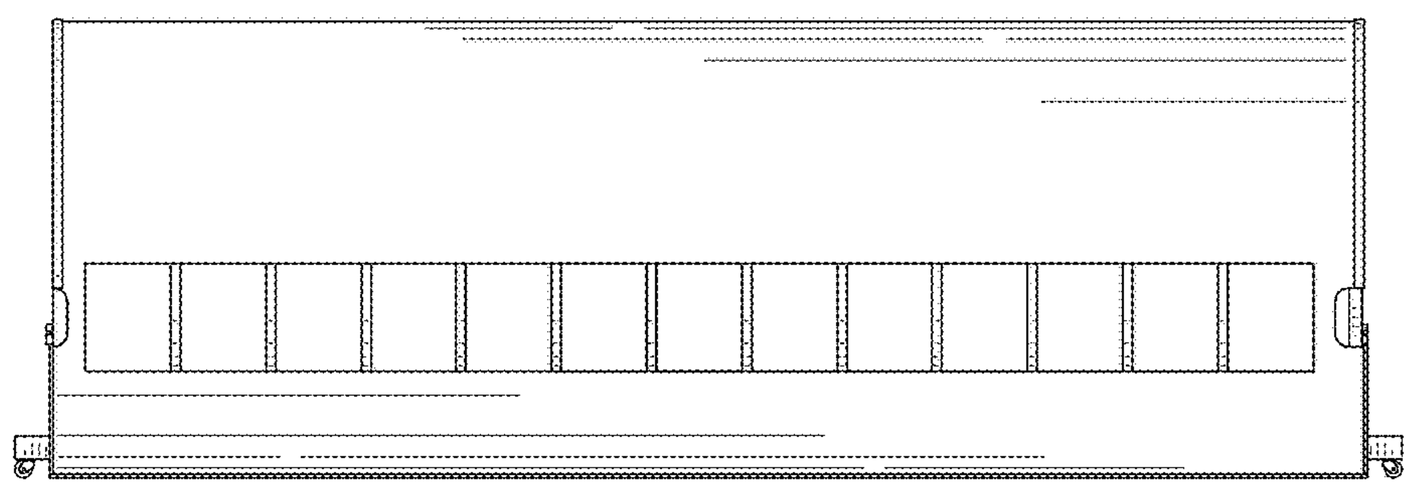

FIG. 23

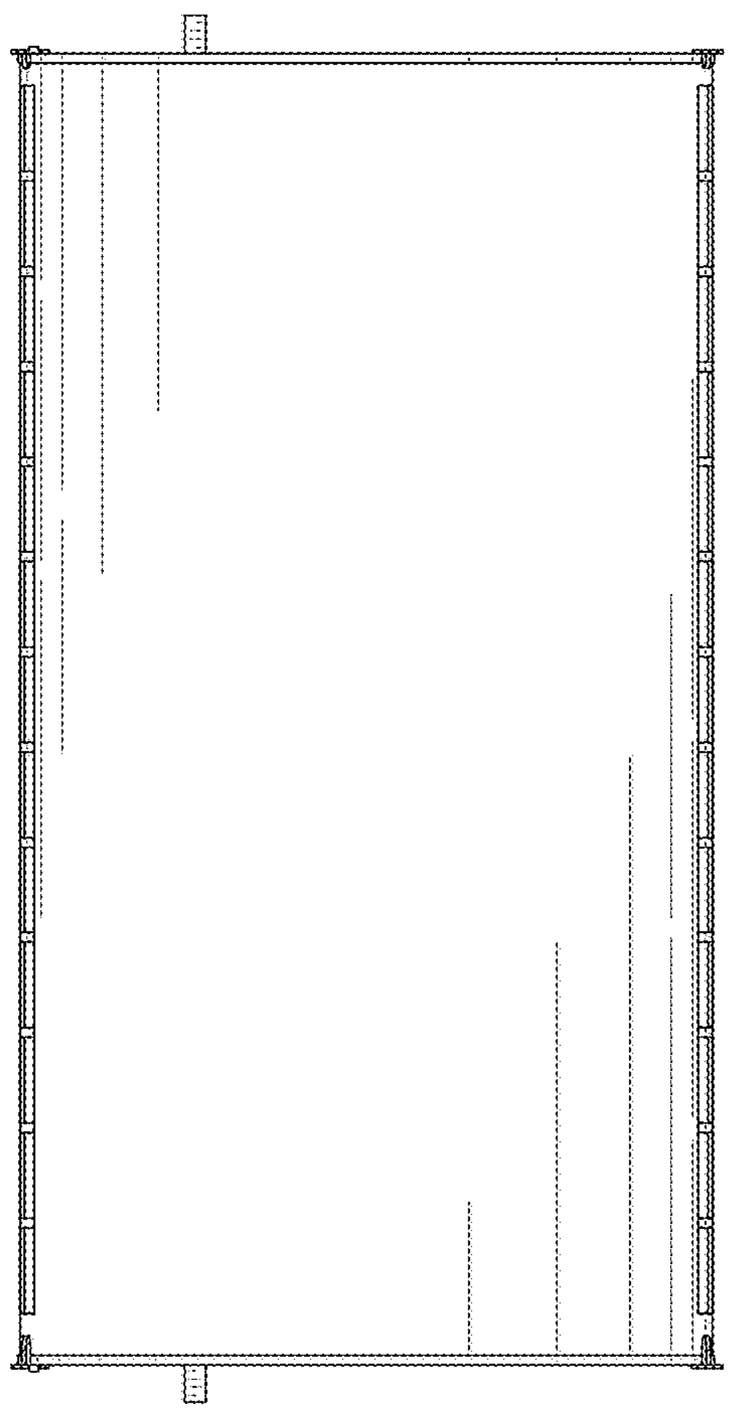

FIG. 24

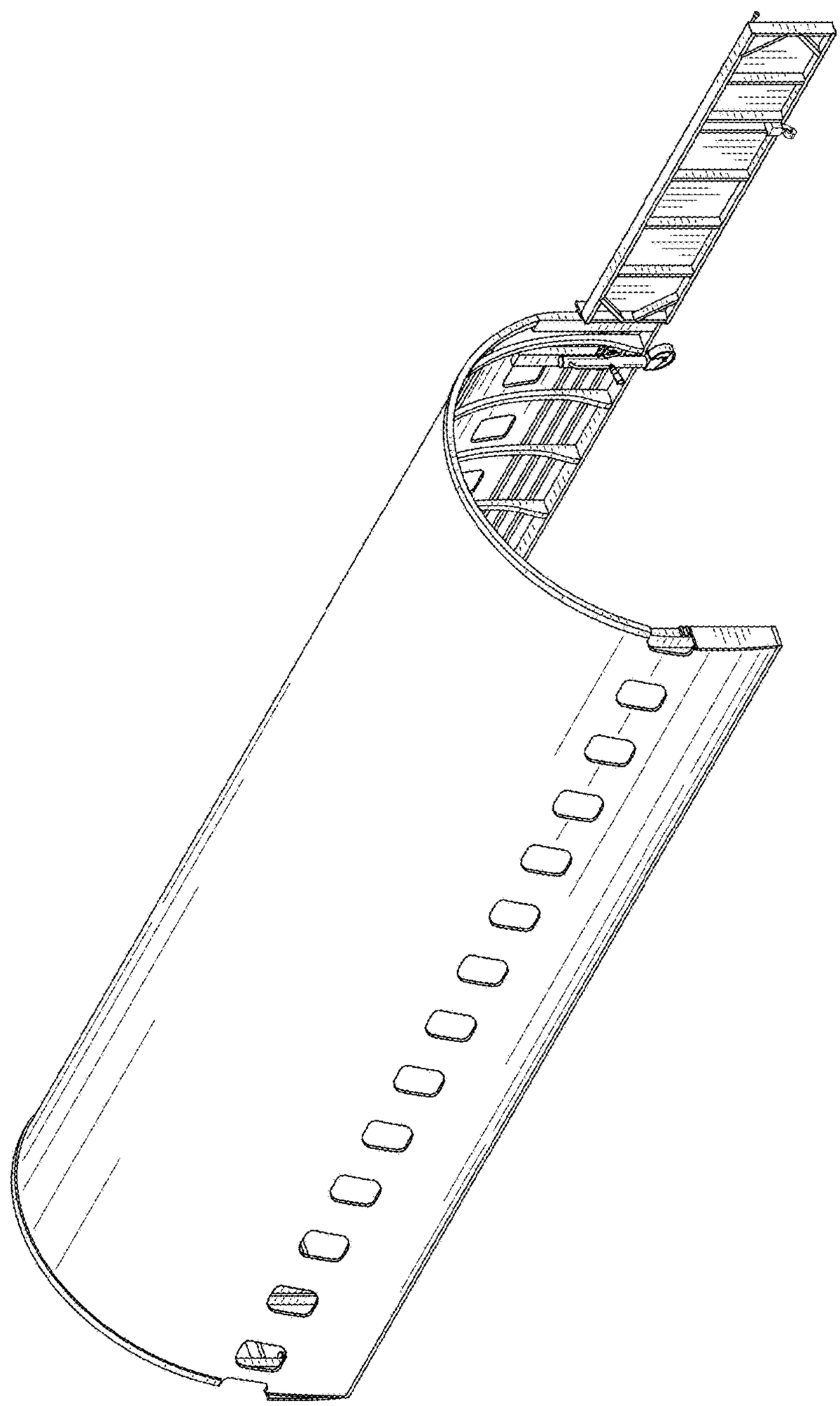

FIG. 25

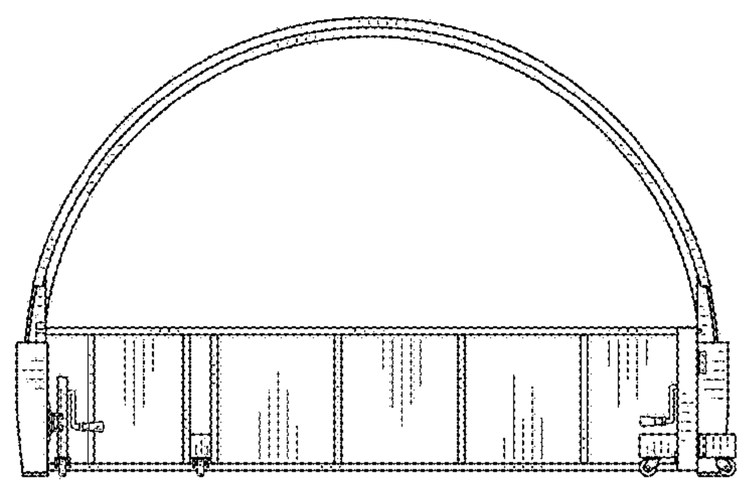

FIG. 26

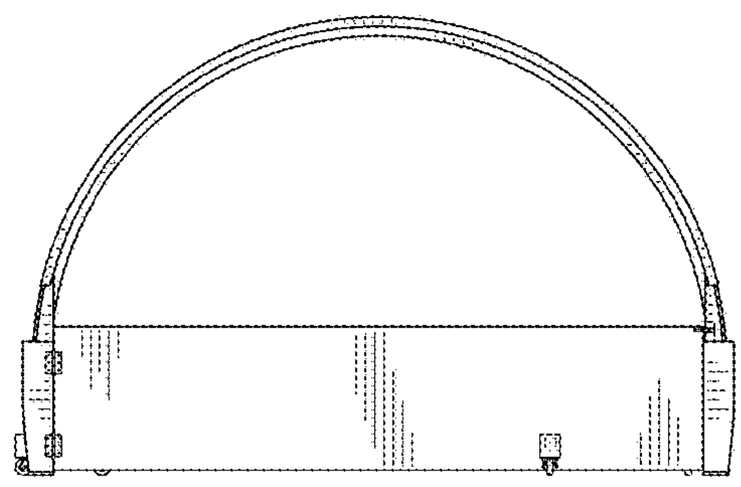

FIG. 27

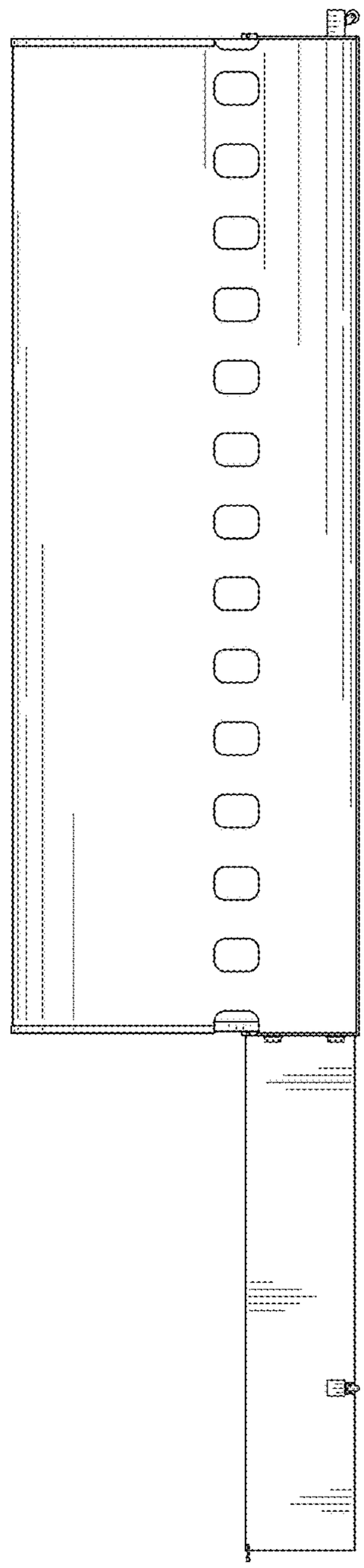

FIG. 28

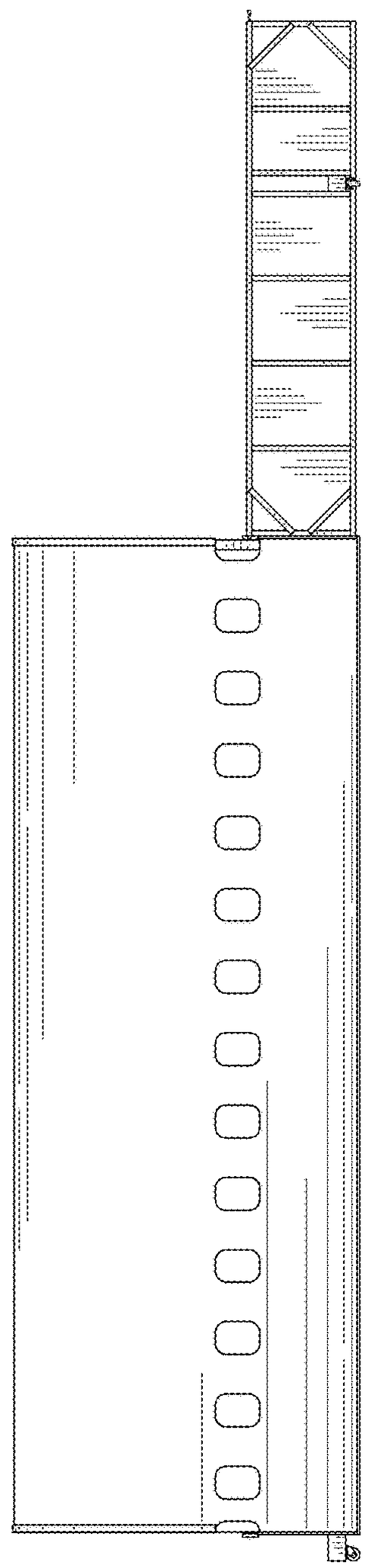

FIG. 29

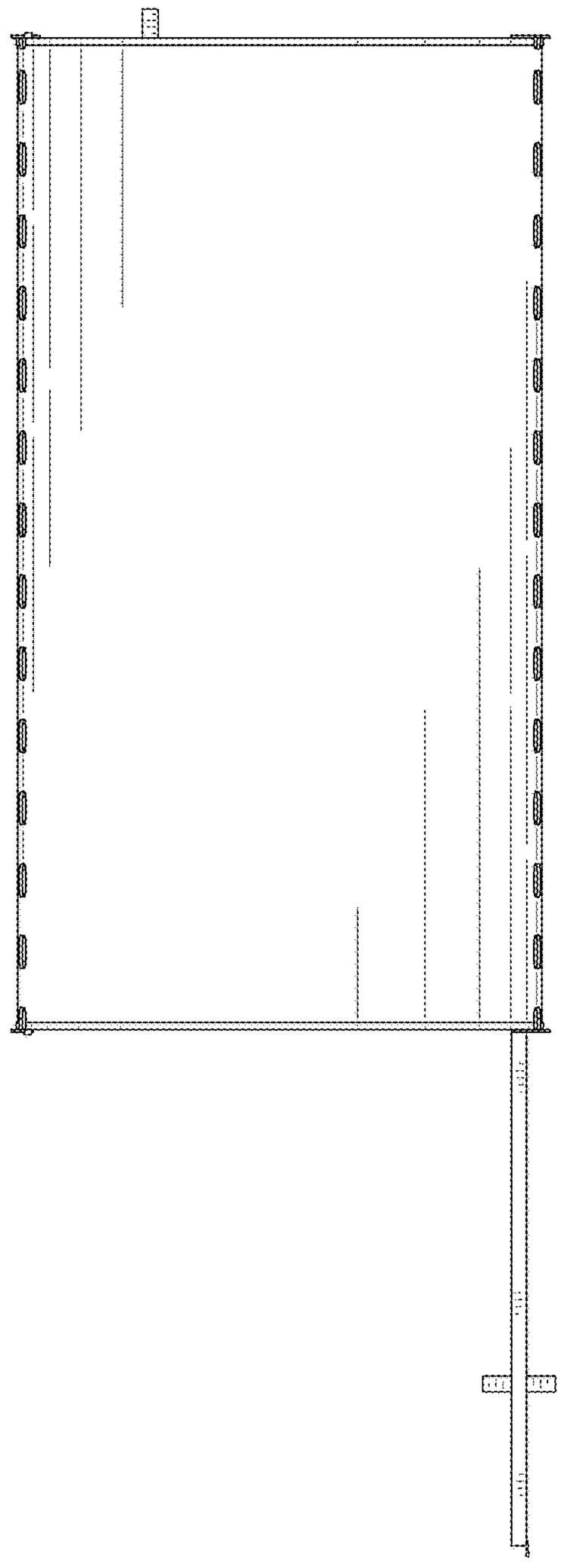

FIG. 30

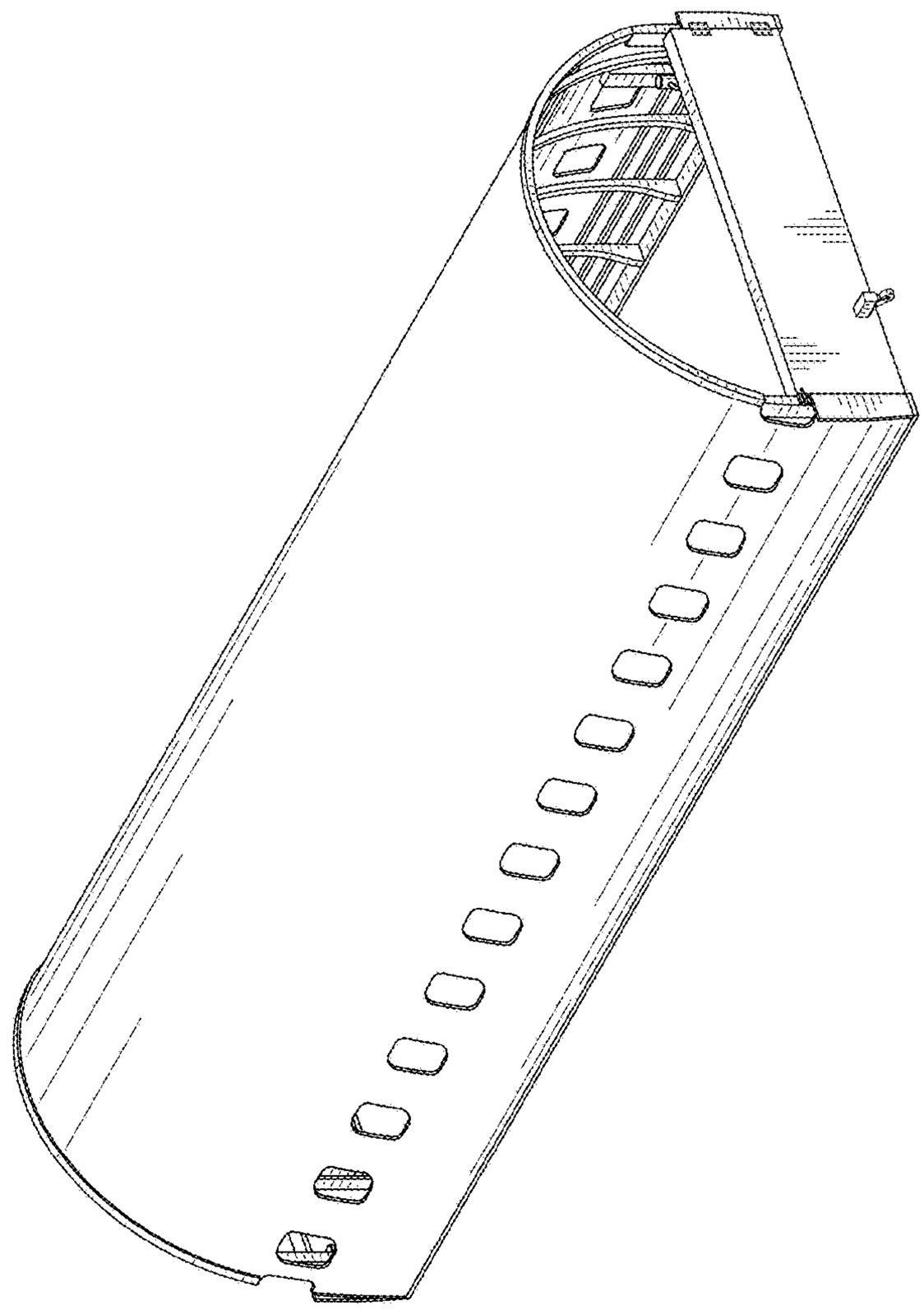

FIG. 31

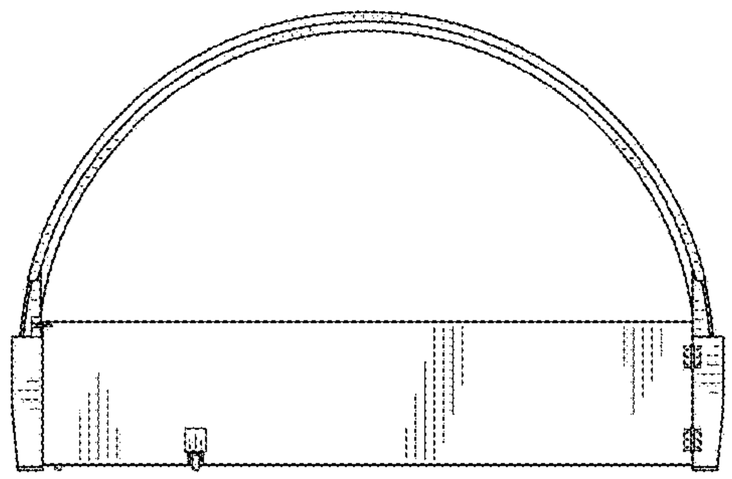

FIG. 32

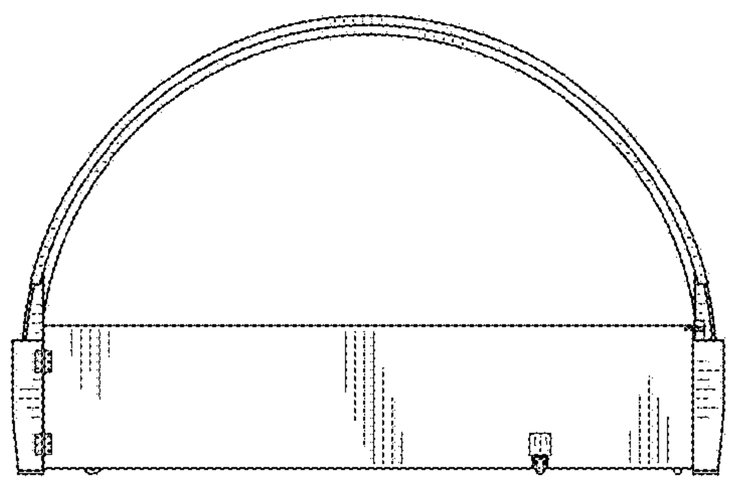

FIG. 33

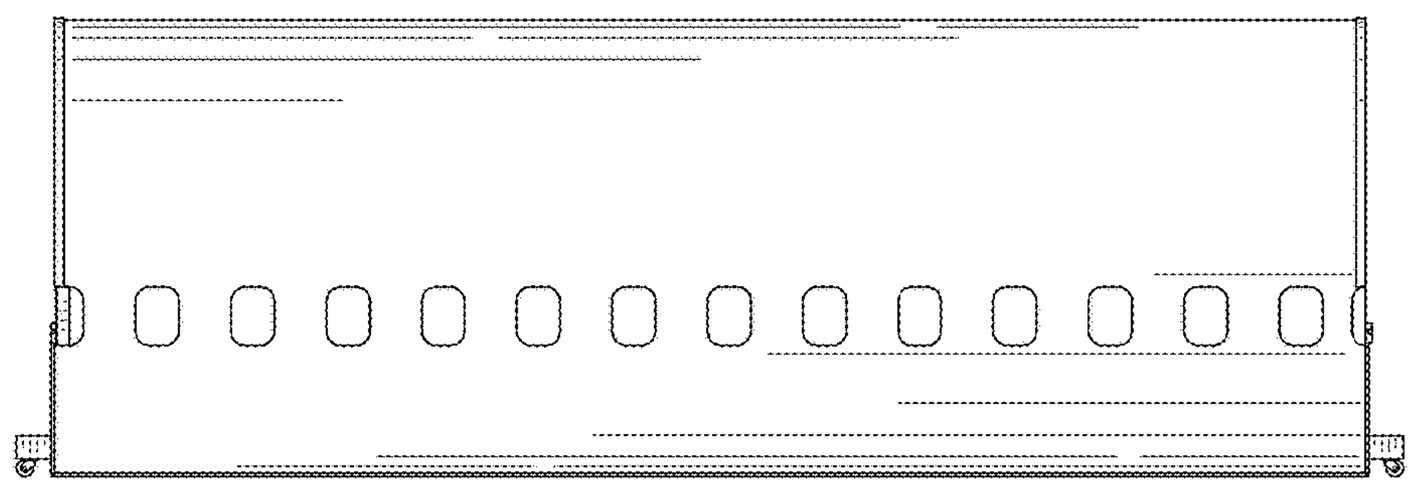

FIG. 34

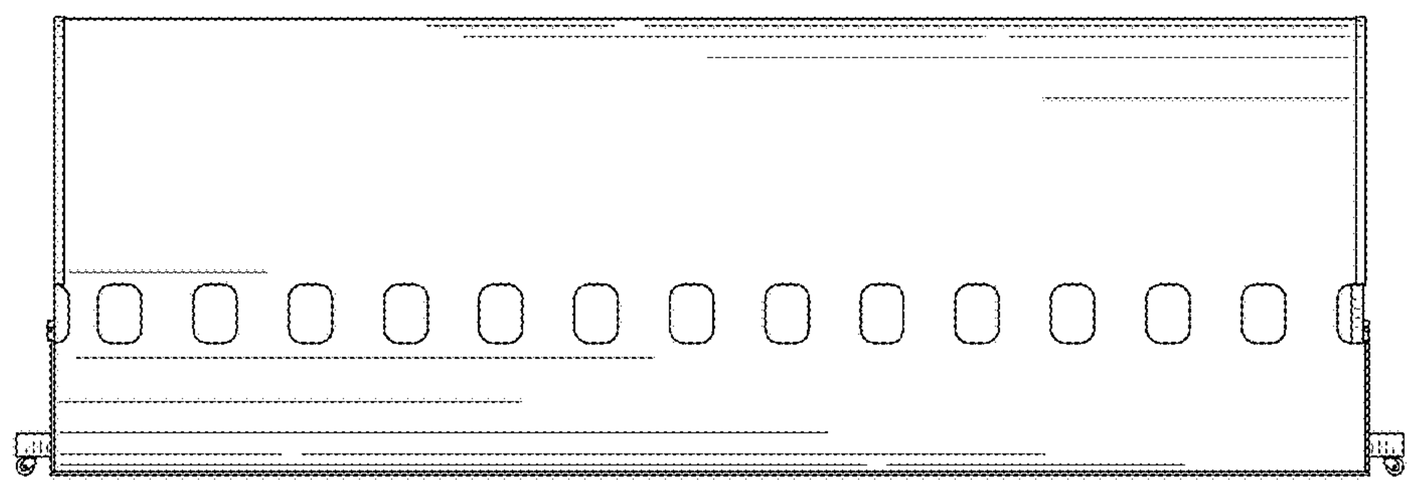

FIG. 35

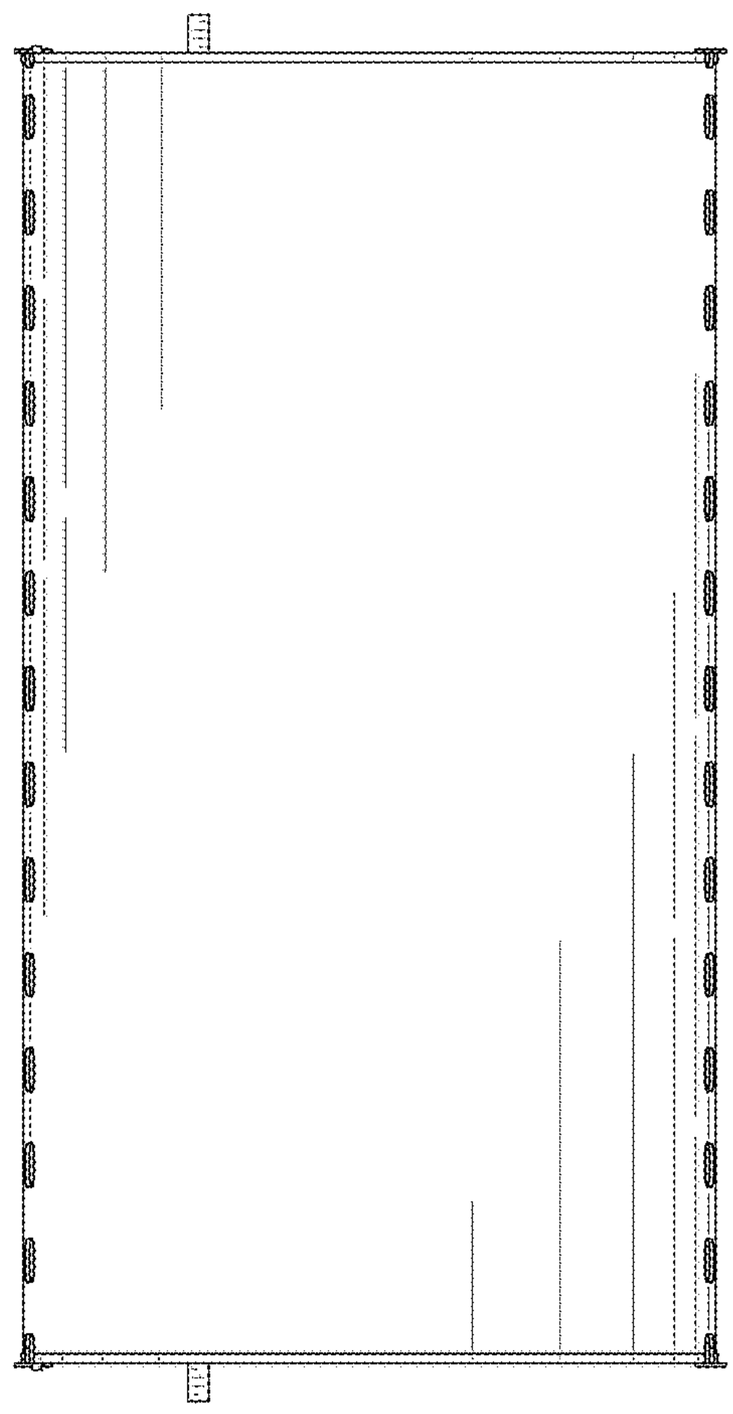

FIG. 36