US00D863382S

(12) United States Design Patent

Abe et al.

(10) Patent No.: US D863,382 S
(45) Date of Patent: ** Oct. 15, 2019

(54) **CUTTING TOOL**

(71) Applicant: **SUMITOMO ELECTRIC HARDMETAL CORP.**, Itami-shi (JP)

(72) Inventors: **Makoto Abe**, Willich (DE); **Christoph Zeiner**, Willich (DE)

(73) Assignee: **SUMITOMO ELECTRIC HARDMETAL CORP.**, Itami-Shi (JP)

(**) Term: **15 Years**

(21) Appl. No.: **29/601,932**

(22) Filed: **Apr. 27, 2017**

(30) **Foreign Application Priority Data**

Oct. 28, 2016 (JP) 2016-023515
Oct. 28, 2016 (JP) 2016-023516

(51) **LOC (12) Cl.** **15-03**

(52) **U.S. Cl.**
USPC **D15/139**

(58) **Field of Classification Search**
USPC D15/124–144; D8/70, 90, 98, 120
CPC B23C 2200/0411; B23C 2200/0416; B23C 2200/0433; B23C 2200/164; B23C 2200/361; B23C 2210/0457; B23C 5/006; B23C 2200/168; B23C 2210/163; B23C 2226/125; B23C 5/10; B23C 2200/081; B23C 2200/087; B23C 2200/161; B23C 2200/206; B23C 2210/02; B23C 2210/03; B23C 2210/166; B23C 2210/50; B23C 2226/315; B23C 5/2208; B23C 5/2472; B23C 2200/0477; B23C 2200/0483; B23C 2200/083; B23C 2200/121; B23C 2200/362; B23C 2210/0428; B23C
(Continued)

(56) **References Cited**

U.S. PATENT DOCUMENTS

3,548,473 A * 12/1970 Stein B23B 27/002 407/117
D399,400 S * 10/1998 Weber D8/70
(Continued)

Primary Examiner — Khawaja Anwar
(74) *Attorney, Agent, or Firm* — Baker Botts L.L.P.; Michael S. Sartori

(57) **CLAIM**

The ornamental design for a cutting tool, as shown and described.

DESCRIPTION

FIG. **1** is a front view of a cutting tool of a first embodiment showing our new design;
FIG. **2** is a rear view thereof;
FIG. **3** is a top view thereof;
FIG. **4** is a bottom view thereof;
FIG. **5** is a right side view thereof;
FIG. **6** is a left side view thereof;
FIG. **7** is a first perspective view thereof;
FIG. **8** is a second perspective view thereof;
FIG. **9** is a referential view showing the state in use thereof,
FIG. **10** is a front view of a cutting tool of a second embodiment showing our new design,
FIG. **11** is a rear view thereof;
FIG. **12** is a top view thereof;
FIG. **13** is a bottom view thereof;
FIG. **14** is a right side view thereof;
FIG. **15** is a left side view thereof;
FIG. **16** is a first perspective view thereof;
FIG. **17** is a second perspective view thereof;
FIG. **18** is a cross sectional view taken along **18-18** line of FIG. **10**; and,
FIG. **19** is a referential view showing the state in use thereof.
(Continued)

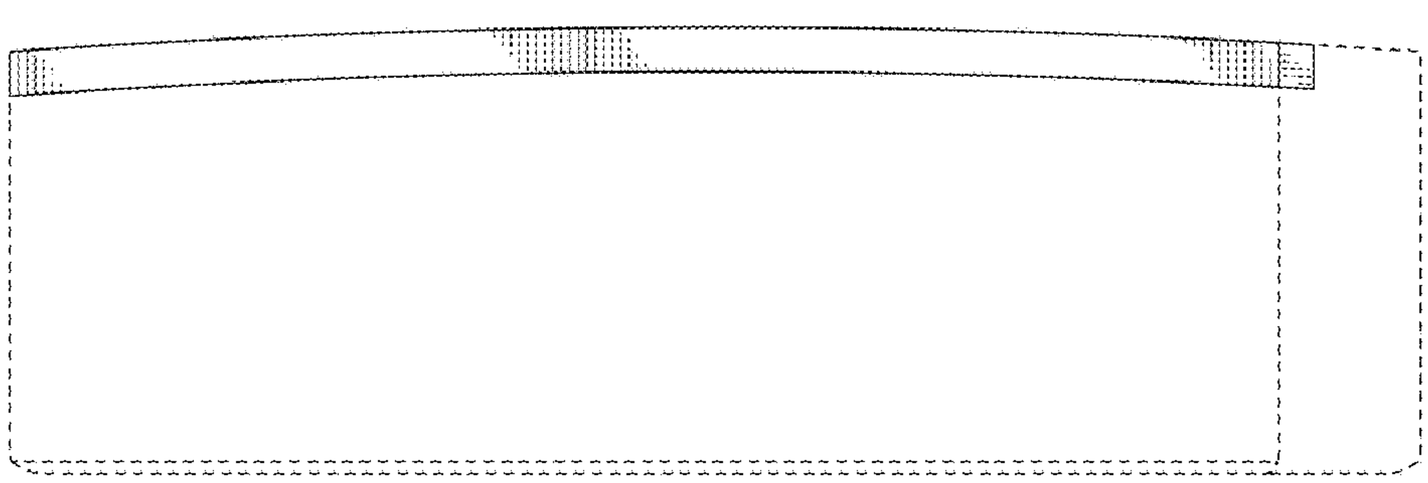

The broken lines shown in the drawings represent portions that form no part of the claimed design.

1 Claim, 10 Drawing Sheets

(58) **Field of Classification Search**
CPC 2210/0435; B23C 2210/16; B23C 2220/36; B23C 2220/44; B23C 2240/08; B23C 2250/12; B23C 2270/06; B23C 5/2204; B23C 5/2213; B23C 5/2247; B23C 5/2427; B23C 2200/0422; B23C 2200/08; B23C 2200/086; B23C 2200/123
See application file for complete search history.

(56) **References Cited**

U.S. PATENT DOCUMENTS

D444,486	S	*	7/2001	Biller	D15/139
D772,317	S	*	11/2016	Johnson	D15/139
D788,198	S	*	5/2017	Zeiner	D15/139
D807,934	S	*	1/2018	Abe	D15/138
D809,031	S	*	1/2018	Burton	B28D 1/186 D15/139
D814,537	S	*	4/2018	Wu	D15/139
D831,084	S	*	10/2018	Abe	D15/139

* cited by examiner

FIG.1

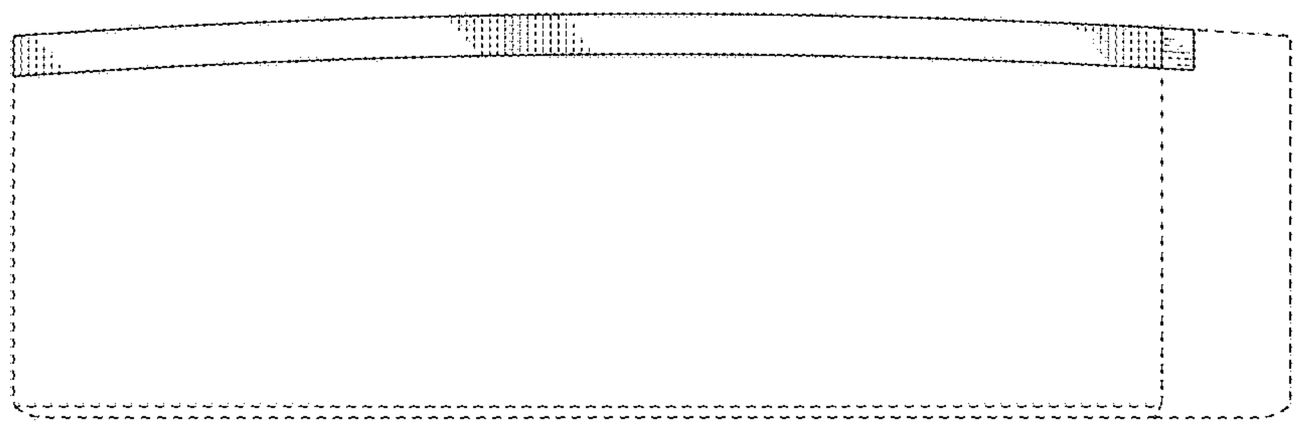

FIG.2

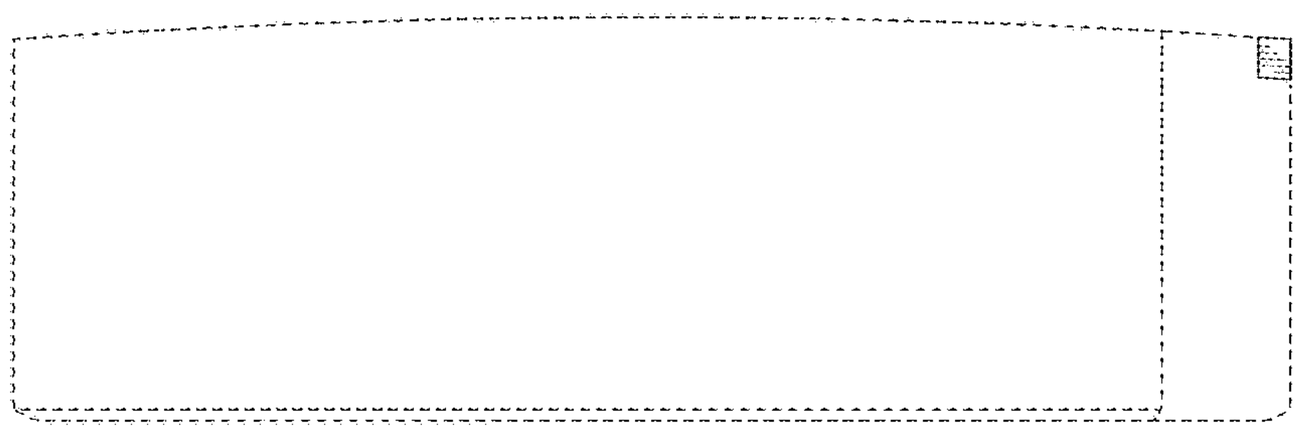

FIG.3

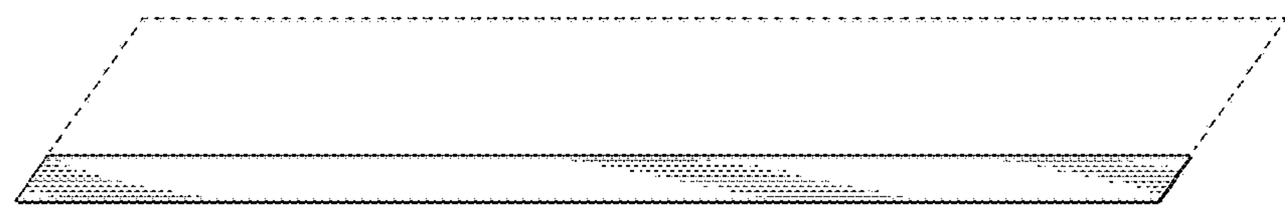

FIG.4

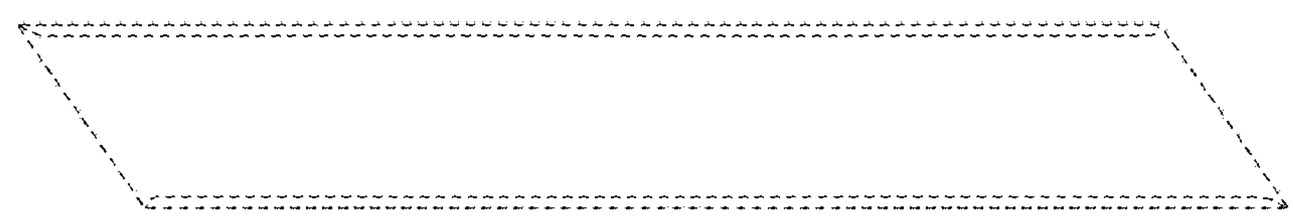

FIG.5

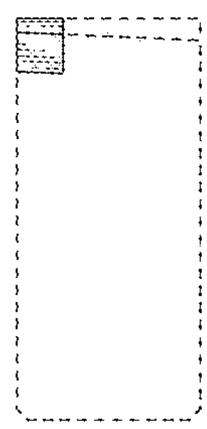

FIG.6

FIG.7

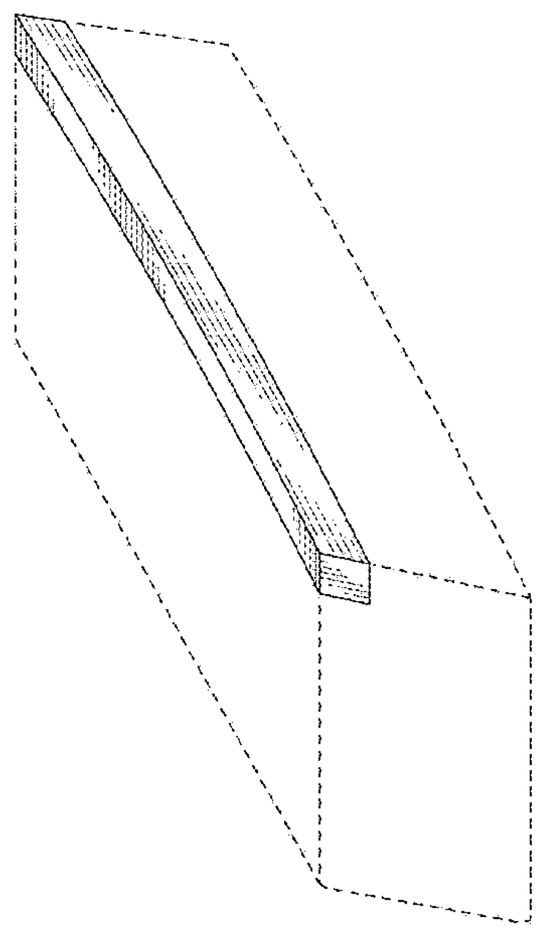

FIG.8

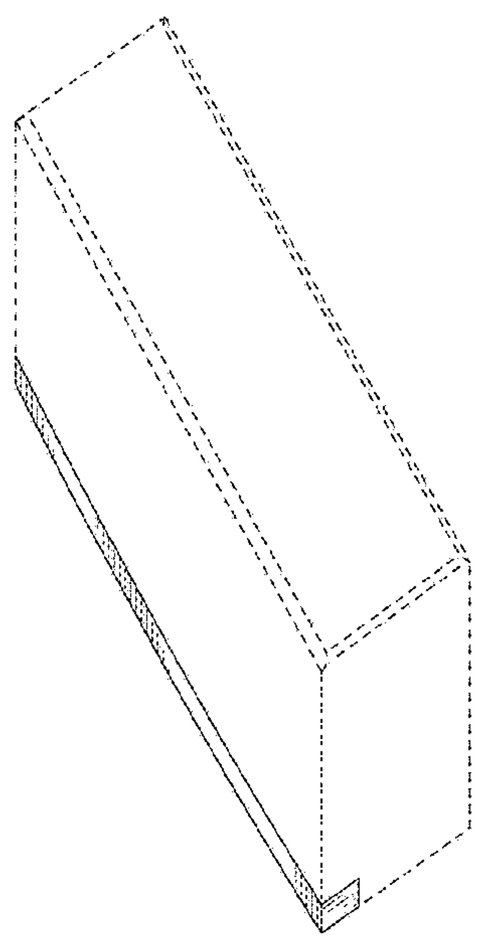

FIG.9

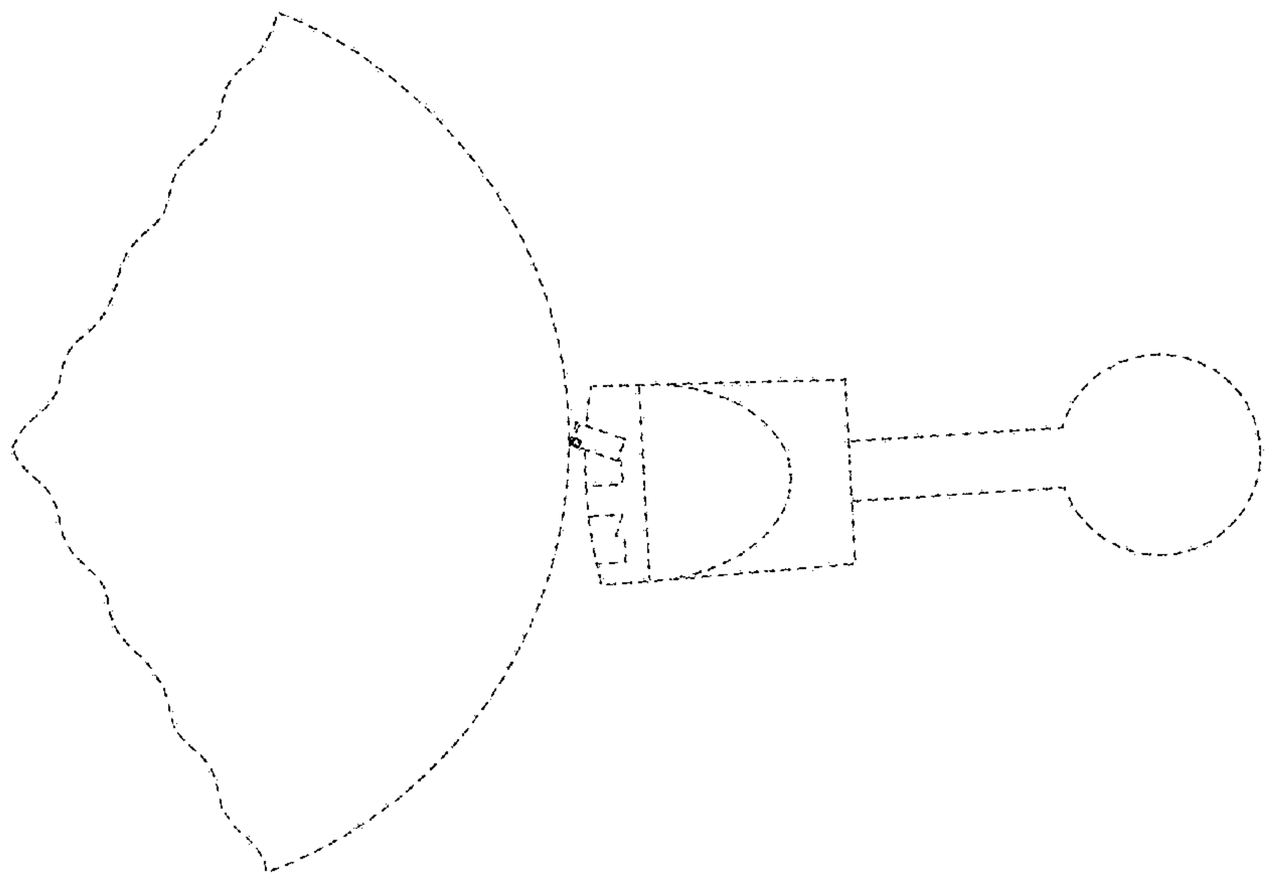

FIG.10

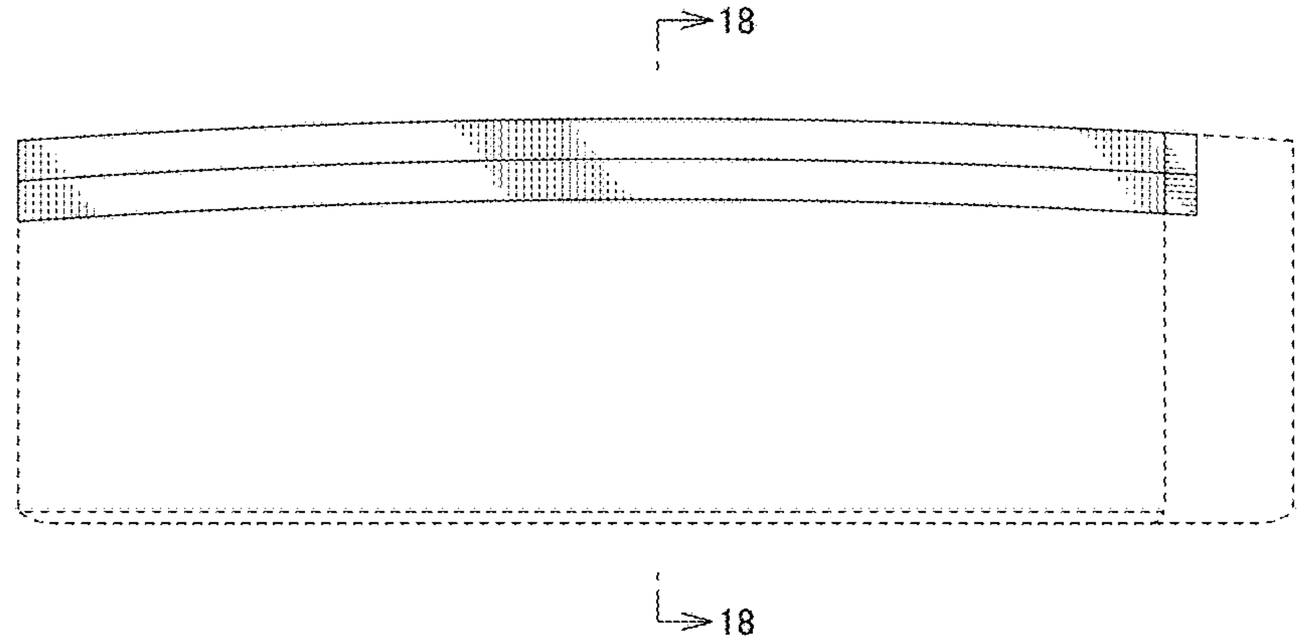

FIG.11

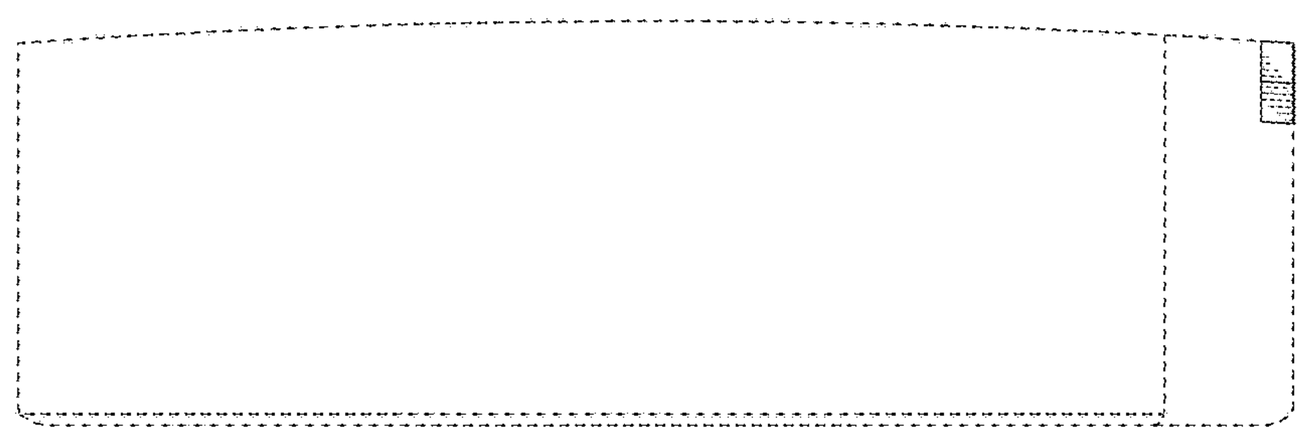

FIG.12

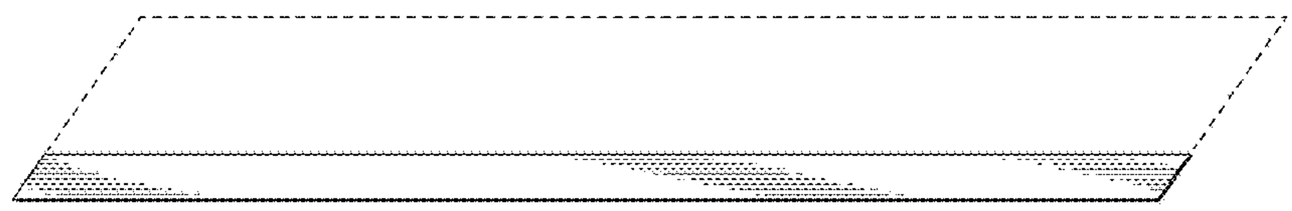

FIG.13

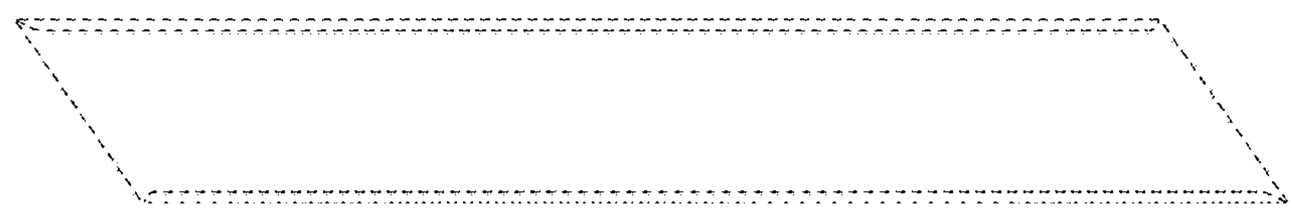

FIG.14

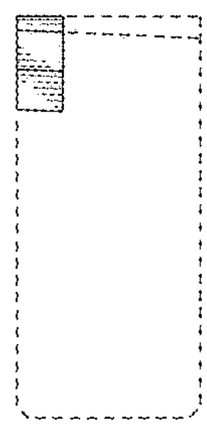

FIG.15

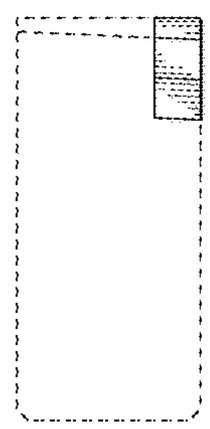

FIG.16

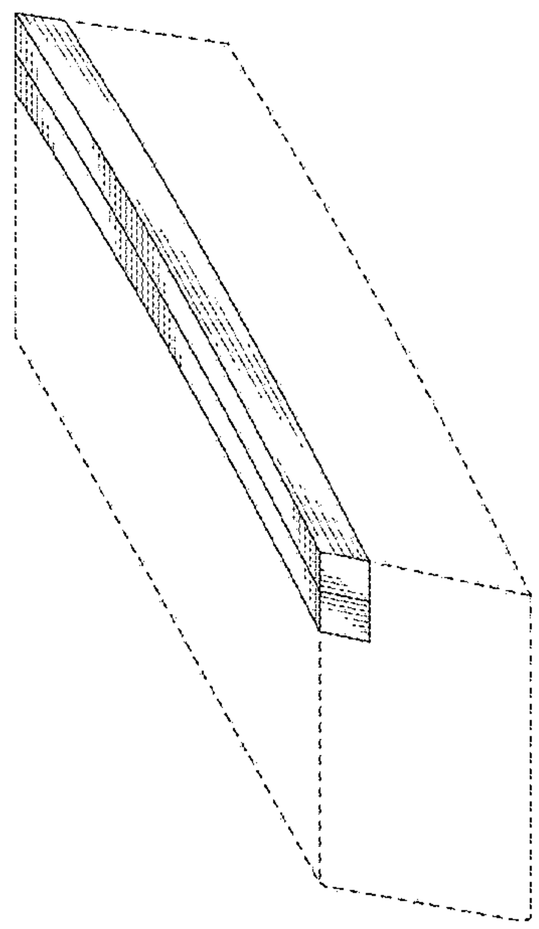

FIG.17

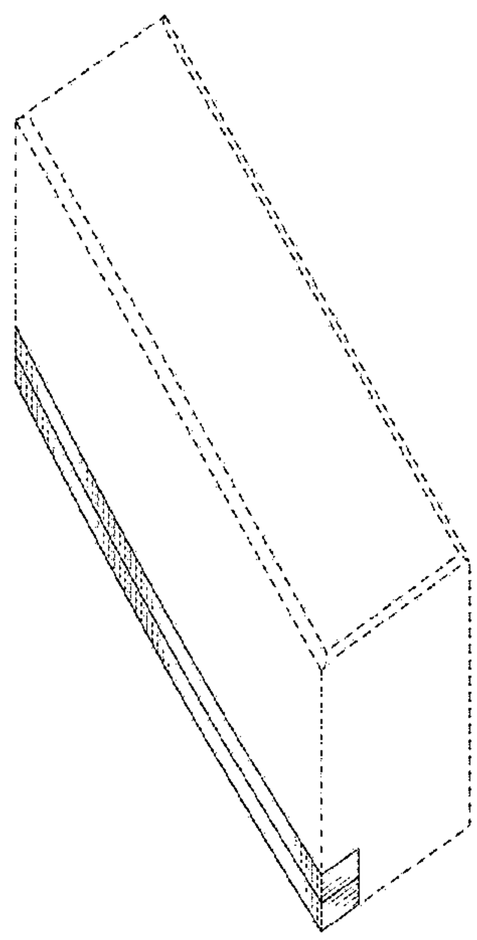

FIG.18

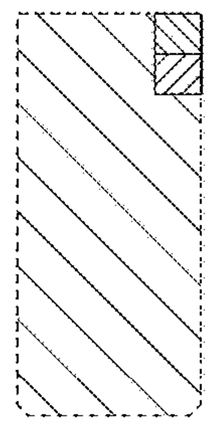
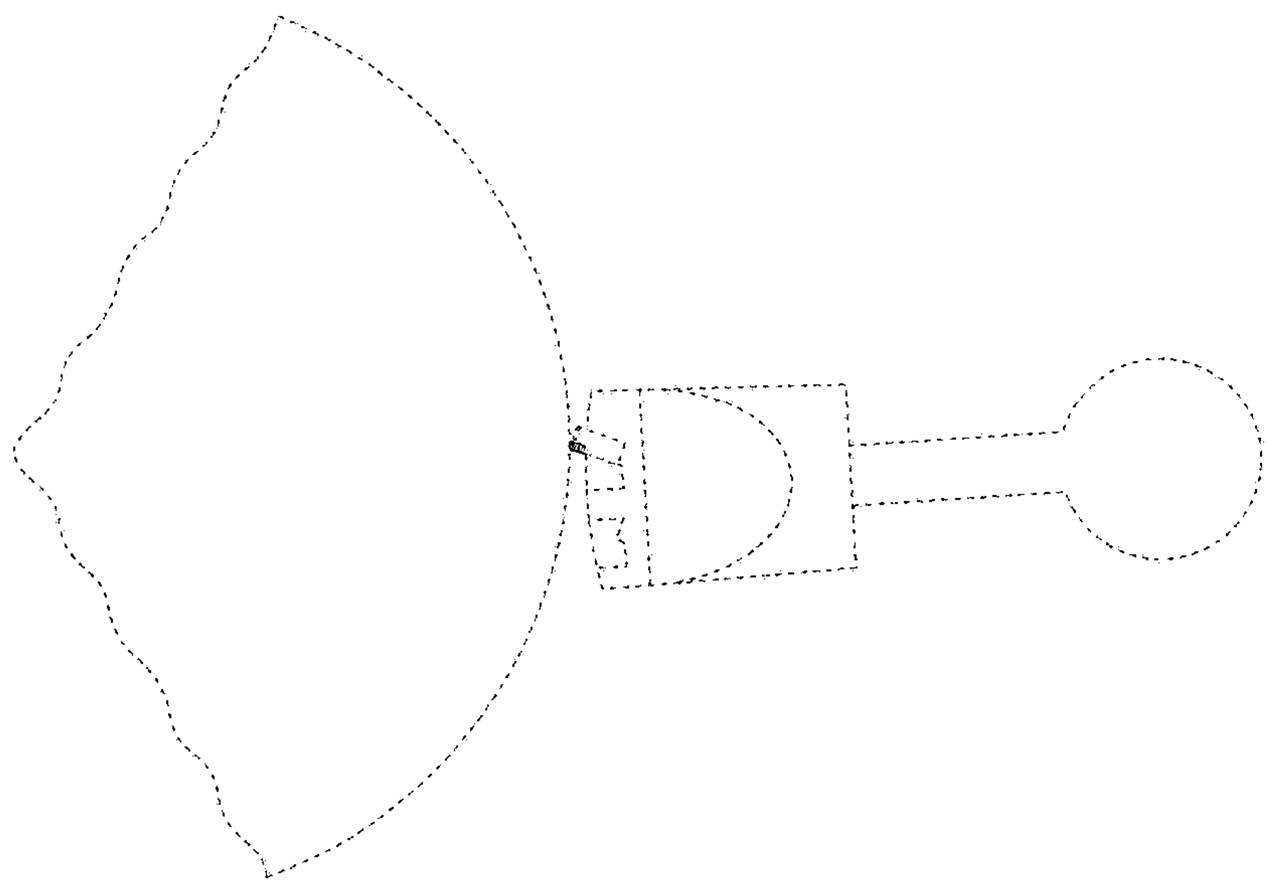
FIG.19