US00D863379S

(12) United States Design Patent

Bilancio et al.

(10) Patent No.: US D863,379 S
(45) Date of Patent: ** Oct. 15, 2019

(54) **CONTROL PANEL FOR AN APPLIANCE**

(71) Applicant: **WHIRLPOOL CORPORATION**, Benton Harbor, MI (US)

(72) Inventors: **Nathan Bilancio**, St. Joseph, MI (US); **Marco Cammarata**, Benton Harbor, MI (US); **Alexander L. Clayton**, St. Joseph, MI (US); **Estela Duhart**, St. Joseph, MI (US); **Brandon L. Satanek**, Stevensville, MI (US)

(73) Assignee: **Whirlpool Corporation**, Benton Harbor, MI (US)

(**) Term: **15 Years**

(21) Appl. No.: **29/589,434**

(22) Filed: **Dec. 30, 2016**

(51) **LOC (12) Cl.** **15-07**

(52) **U.S. Cl.**
USPC **D15/89**

(58) **Field of Classification Search**
USPC D15/79–91; D14/485–489, 493
CPC F25D 23/028; F25D 2400/361; F25D 29/005; F25D 11/00; F25D 17/065; F25D 23/066; F25D 23/067; F25D 17/045; F25D

(Continued)

(56) **References Cited**

U.S. PATENT DOCUMENTS

5,916,353 A 6/1999 Bennett et al.
6,535,644 B1 3/2003 Kurapati

(Continued)

Primary Examiner — Khawaja Anwar
(74) *Attorney, Agent, or Firm* — Price Heneveld LLP

(57) **CLAIM**

We claim the ornamental design for a control panel for an appliance, as shown and described.

DESCRIPTION

FIG. **1** is a front elevational view of a control panel for an appliance of the present disclosure;
FIG. **2** is a front perspective view of the control panel of FIG. **1**;
FIG. **3** is a front elevational view of area V of the control panel of FIG. **1**;
FIG. **4** is a front elevational view of a control panel for an appliance of the present disclosure;
FIG. **5** is a front perspective view of the control panel of FIG. **4**;
FIG. **6** is a front elevational view of area VIII of the control panel of FIG. **4**;
FIG. **7** is a front elevational view of a control panel for an appliance of the present disclosure;
FIG. **8** is a front perspective view of the control panel of FIG. **7**;
FIG. **9** is a front elevational view of area XI of the control panel of FIG. **7**;
FIG. **10** is a front elevational view of a control panel for an appliance of the present disclosure;
FIG. **11** is a front perspective view of the control panel of FIG. **10**;
FIG. **12** is a front elevational view of area XIV of the control panel of FIG. **10**;
FIG. **13** is a front elevational view of a control panel for an appliance of the present disclosure;
FIG. **14** is a front perspective view of the control panel of FIG. **13**;
FIG. **15** is a front elevational view of area XVII of the control panel of FIG. **13**;
FIG. **16** is a front elevational view of a control panel for an appliance of the present disclosure;
FIG. **17** is a front perspective view of the control panel of FIG. **16**; and,
FIG. **18** is a front elevational view of area XX of the control panel of FIG. **16**.
The broken lines depict portions of the article that form no part of the claimed design.

1 Claim, 18 Drawing Sheets

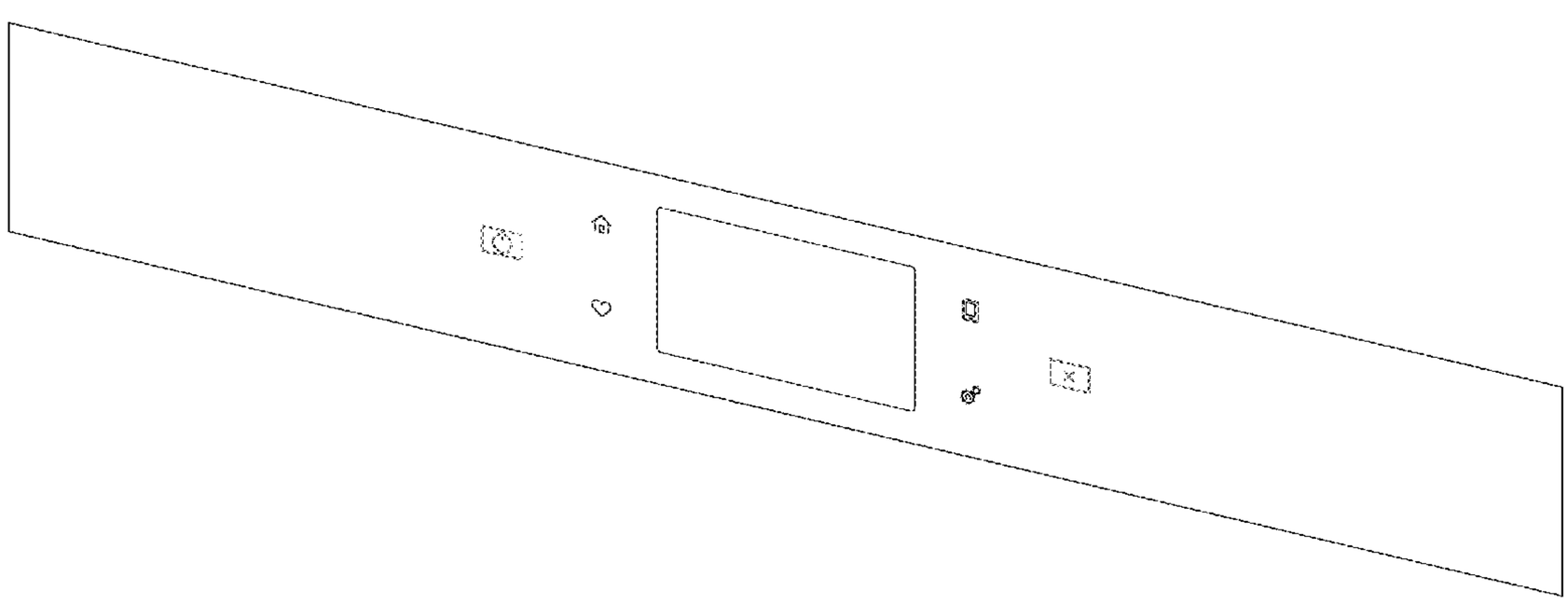

(58) **Field of Classification Search**
CPC 23/069; F25D 2400/06; F25D 2400/16; F25D 2700/04; F25D 27/00; F25D 11/02; F25D 2323/021; F25D 23/02; F25D 23/025; F25D 23/04; F25D 23/065; F25D 2400/40; F25D 25/02; F25D 2700/02; F25D 29/00; F25D 17/04; F25D 17/042; F25D 17/062; F25D 17/067; F25D 2201/14; F25D 2317/04131; F25D 2317/061; F25D 2317/062; F25D 2317/063; F25D 2317/067; F25D 2317/0681; F25D 2317/0682; F25D 2317/0683; F25D 2323/02; F25D 2323/023; F25D 2323/121; F25D 2323/122; F25D 2325/021; F25D 23/062; F25D 23/063; F25D 23/08; F25D 23/087; F25D 23/10; F25D 23/126; F25D 2400/04; F25D 2400/18; F25D 2500/02; F25D 25/022; F25D 25/025; F25D 25/04; F25D 2700/06; F25D 2700/14; F25D 27/005
See application file for complete search history.

(56) **References Cited**

U.S. PATENT DOCUMENTS

D513,684	S		1/2006	Jackovin et al.	
D521,521	S	*	5/2006	Jewitt	D14/487
D618,488	S	*	6/2010	Knochner	D7/350.1
D625,139	S		10/2010	McLaughlin et al.	
D628,438	S		12/2010	Knochner et al.	
D633,336	S	*	3/2011	Sadtler	D7/405
D645,703	S		9/2011	Sadtler	
D646,113	S		10/2011	Park et al.	
D668,110	S	*	10/2012	Borjesson	D7/406
D668,111	S	*	10/2012	Borjesson	D7/406
D668,112	S	*	10/2012	Borjesson	D7/406
D670,724	S		11/2012	Mori et al.	
D682,491	S		5/2013	Kim et al.	
D721,918	S	*	2/2015	Glassman	D7/406
D728,310	S		5/2015	Borjesson et al.	
D730,385	S		5/2015	Chen et al.	
D738,682	S		9/2015	Roberson et al.	
D738,887	S		9/2015	Ma et al.	
D743,997	S		11/2015	Cardell et al.	
D749,610	S		2/2016	Lee et al.	
D750,661	S	*	3/2016	Funnell, II	D14/487
D753,686	S		4/2016	Vardy et al.	
D767,650	S	*	9/2016	Micheviz	D15/89
D793,403	S	*	8/2017	Cross	D14/485
D809,001	S	*	1/2018	Funnell, II	D14/487
D809,536	S	*	2/2018	Cross	D14/486
D809,865	S	*	2/2018	Nilssen	D7/406
D839,318	S	*	1/2019	Meda	D15/89
D844,015	S	*	3/2019	Meng	D14/485
2006/0181517	A1		8/2006	Zadesky et al.	
2006/0184966	A1		8/2006	Hunleth et al.	
2010/0147823	A1		6/2010	Anderson et al.	
2011/0153085	A1		6/2011	Motamedi et al.	
2012/0030607	A1		2/2012	Michel et al.	
2013/0249847	A1		9/2013	Goss et al.	
2013/0277353	A1		10/2013	Joseph et al.	
2016/0097541	A1		4/2016	Choi	

* cited by examiner

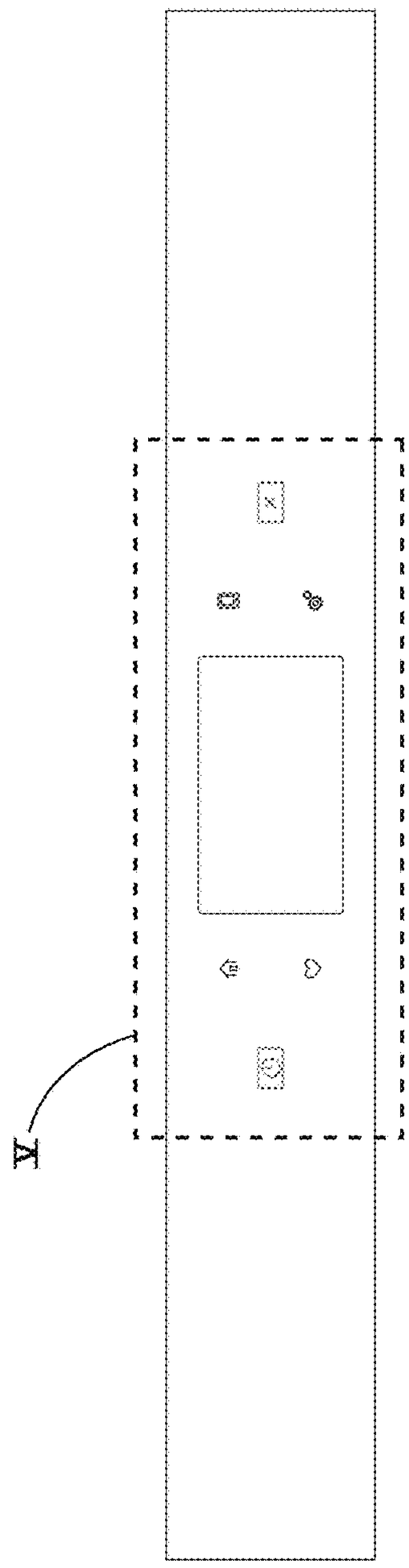

FIG. 1

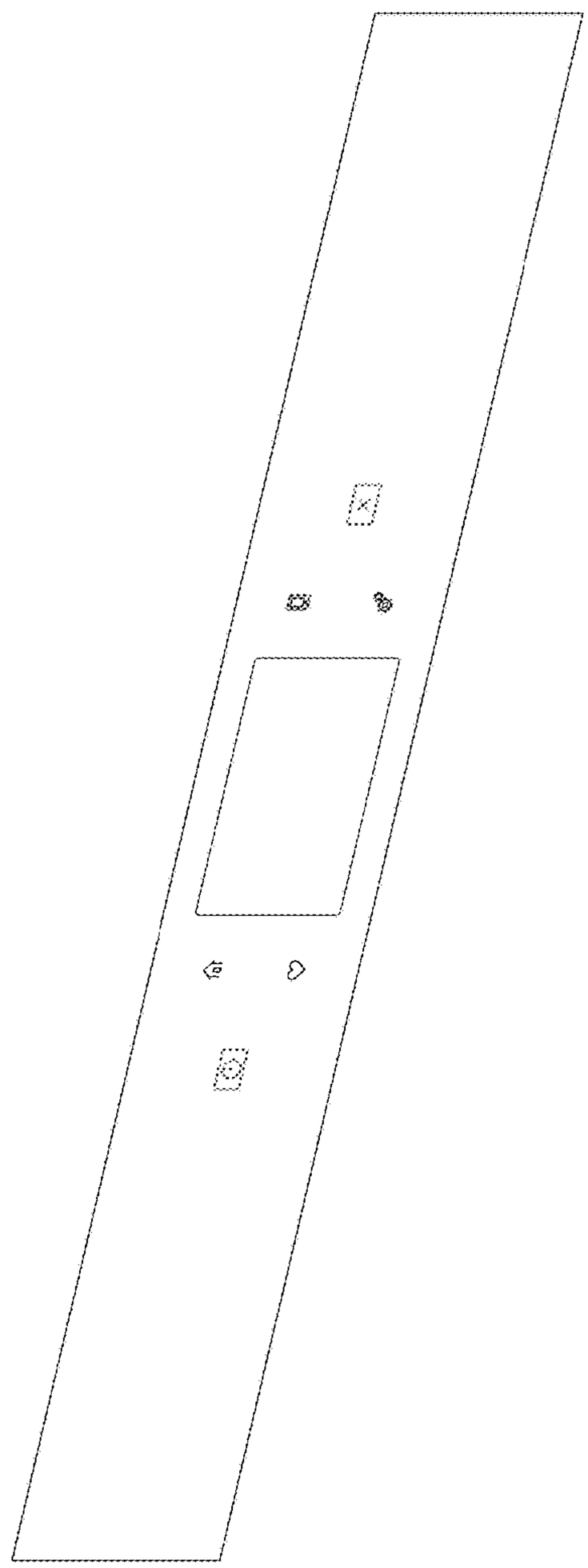

FIG. 2

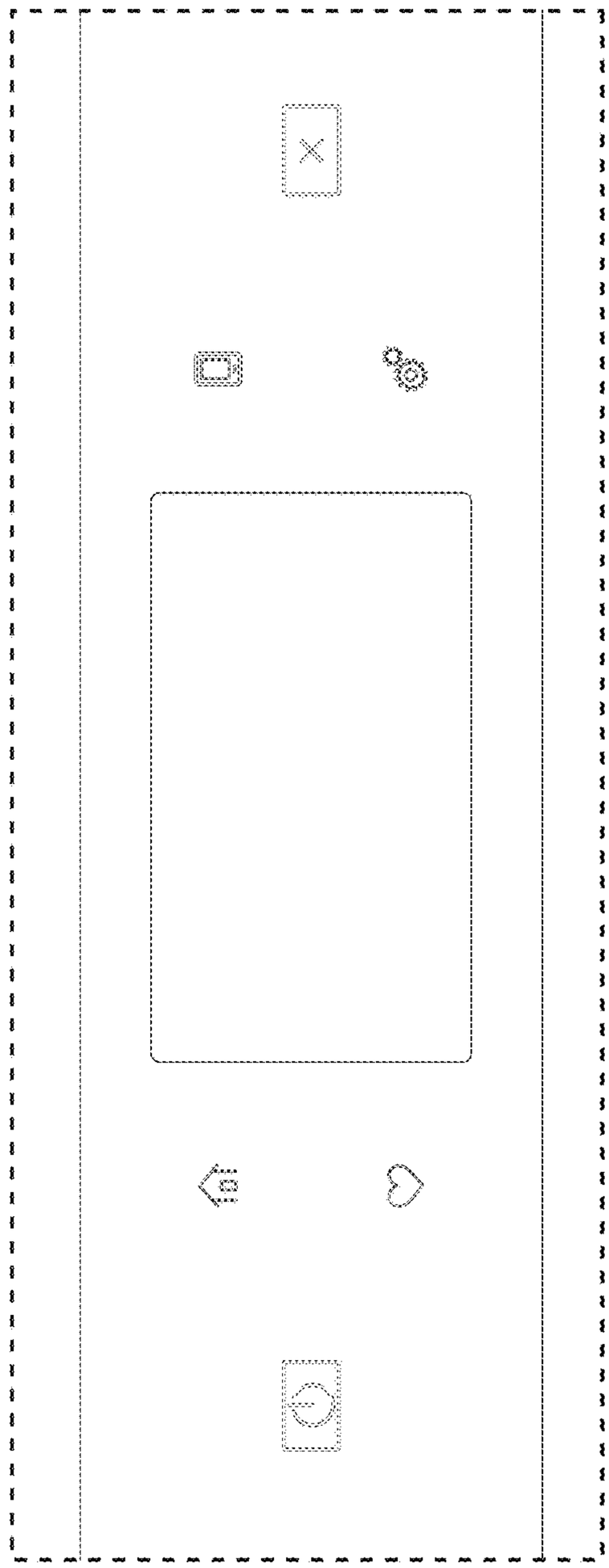

FIG. 3

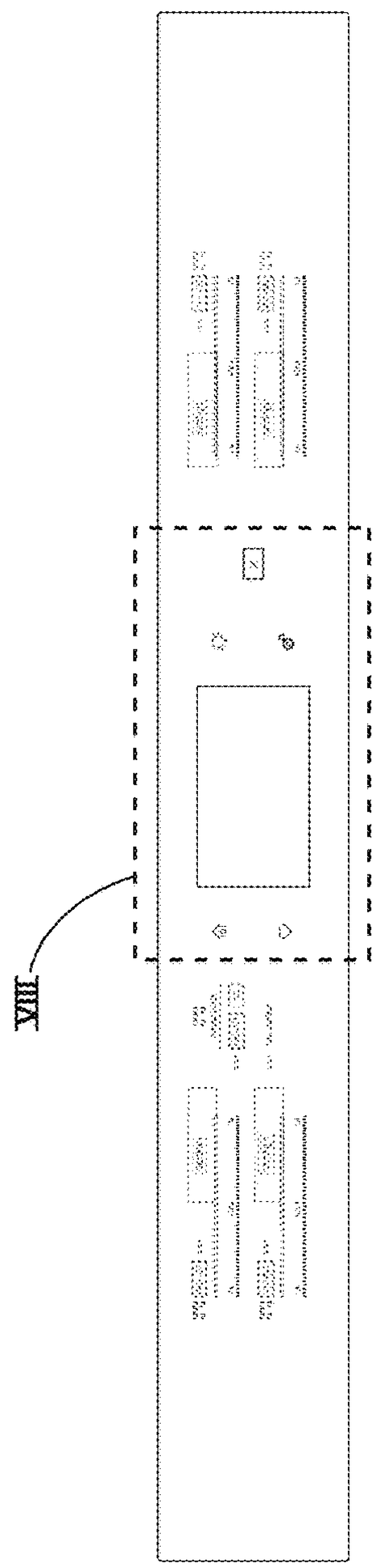

FIG. 4

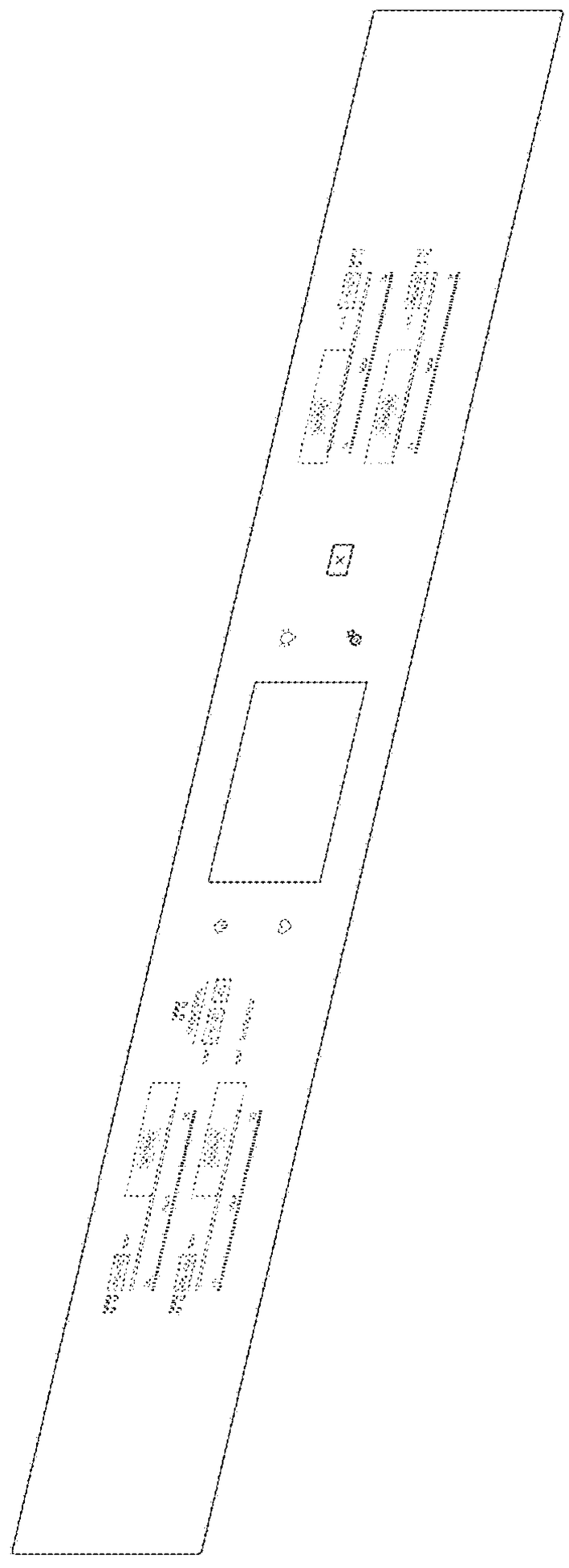

FIG. 5

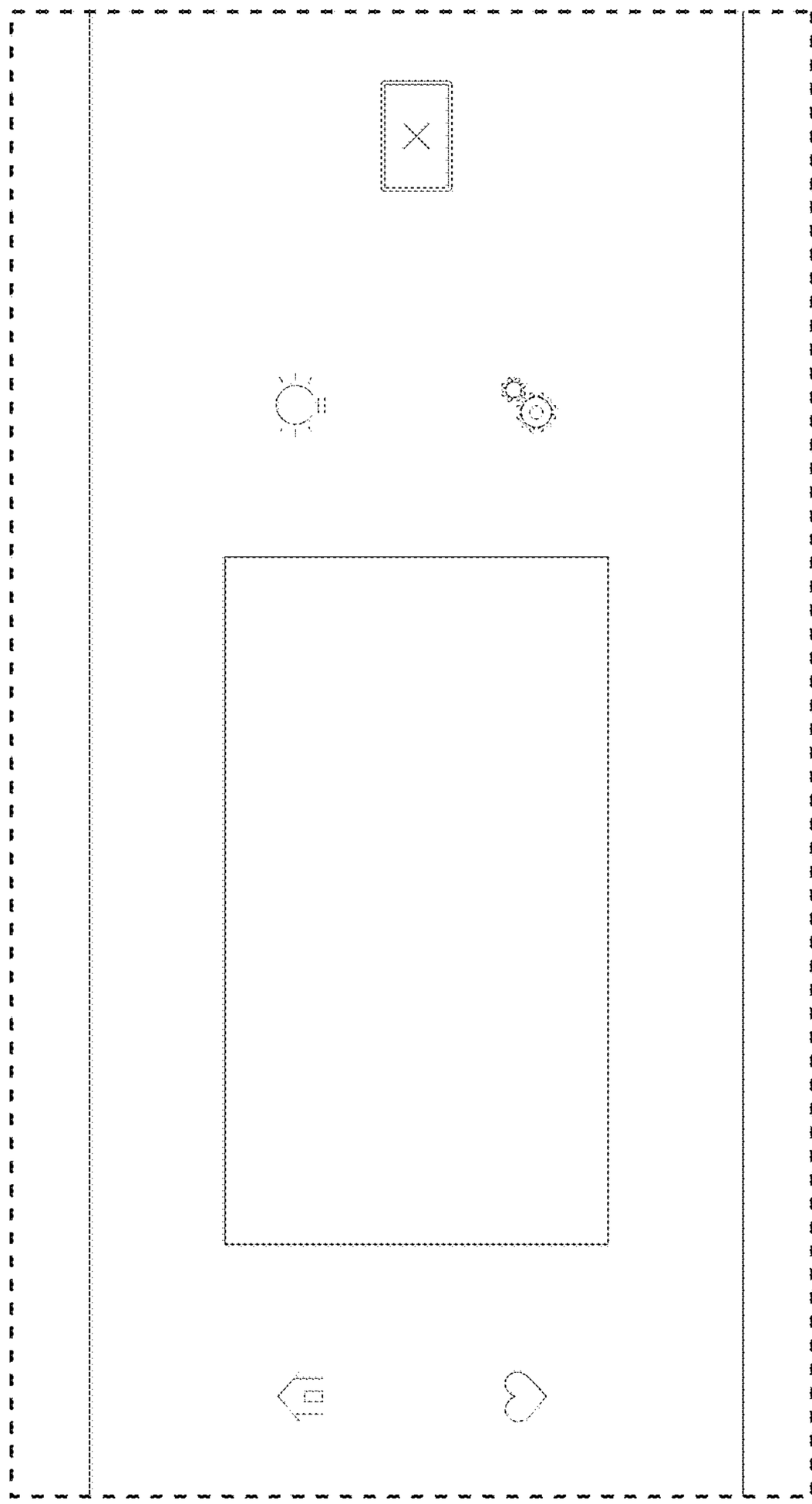

FIG. 6

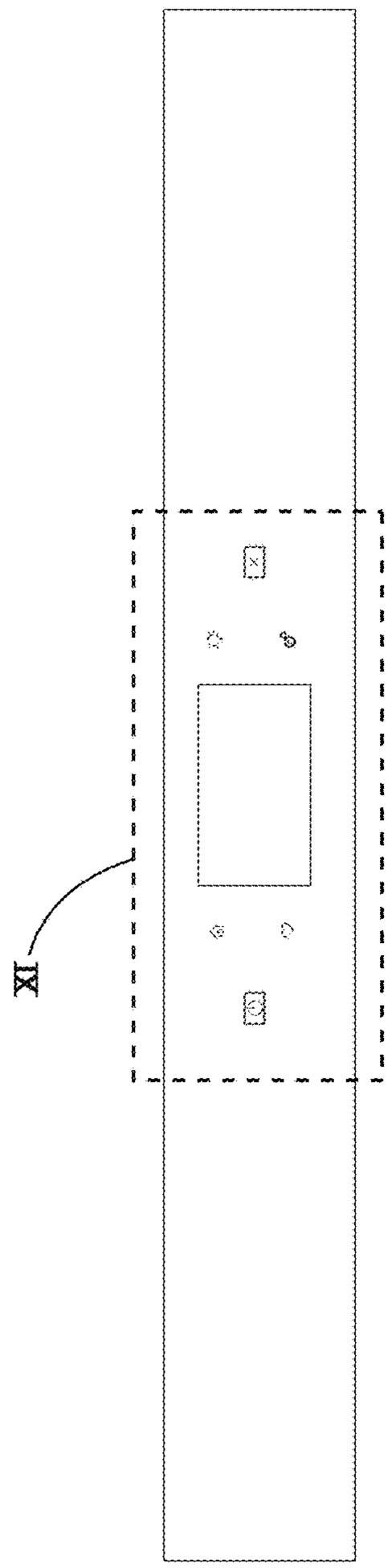

FIG. 7

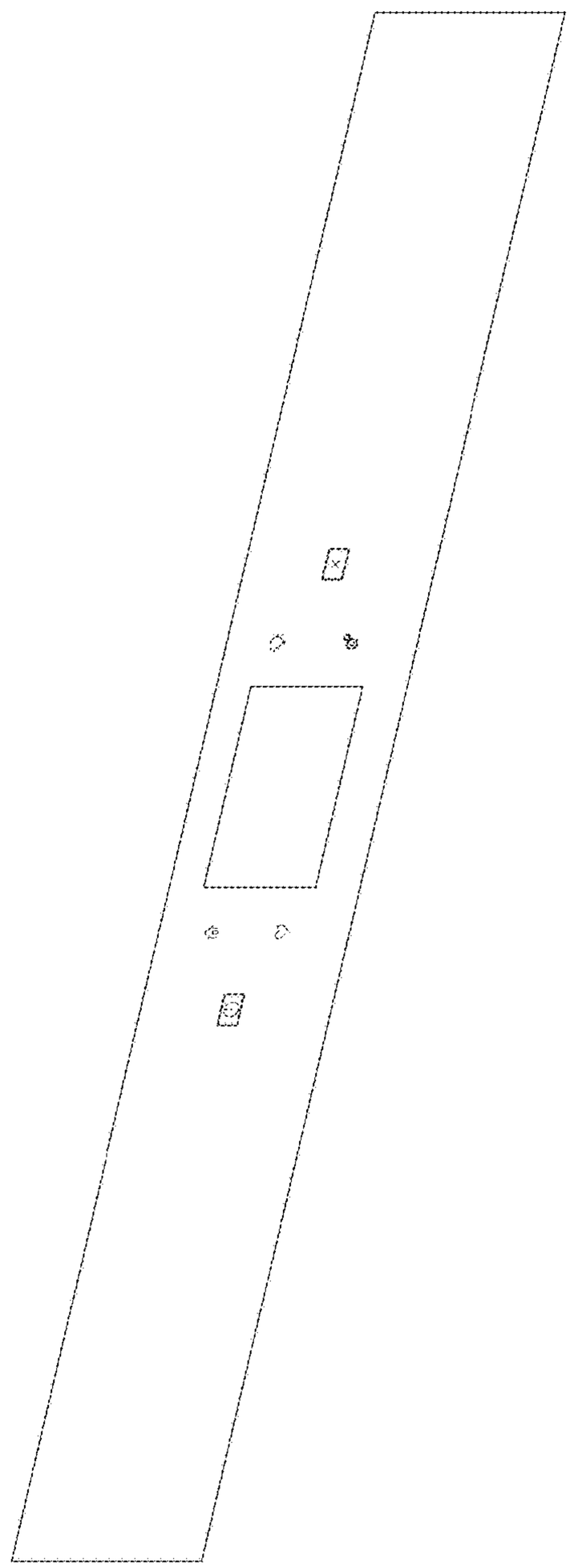

FIG. 8

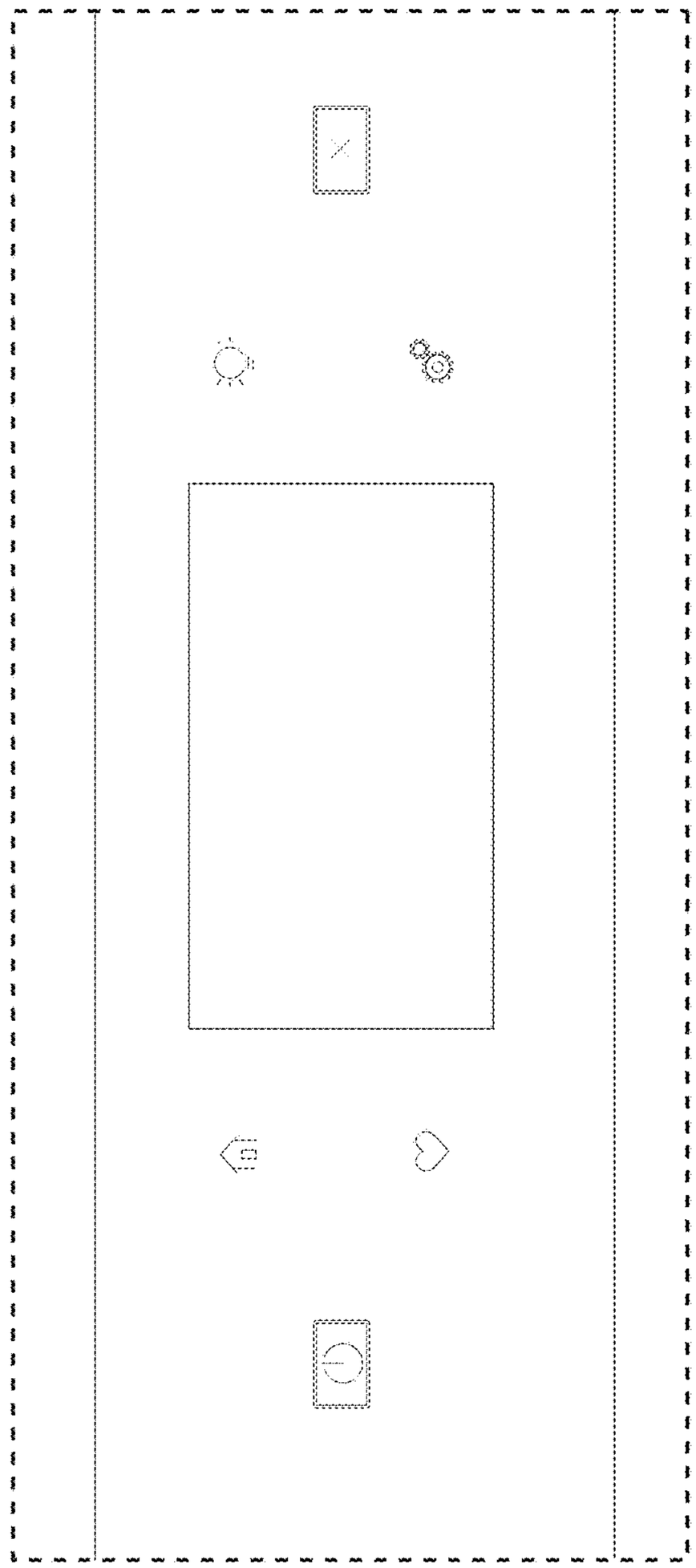

FIG. 9

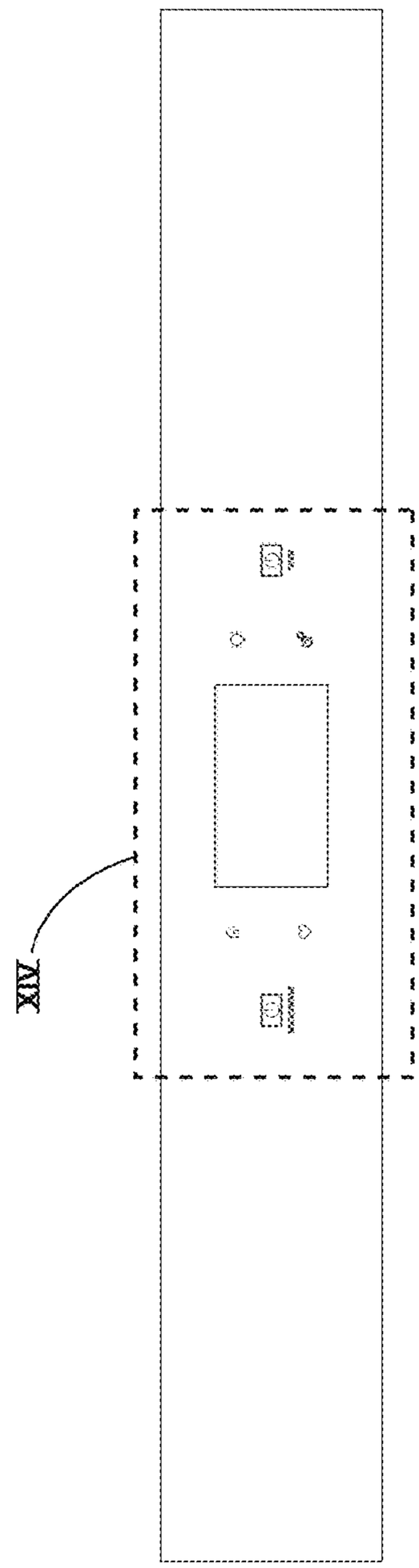

FIG. 10

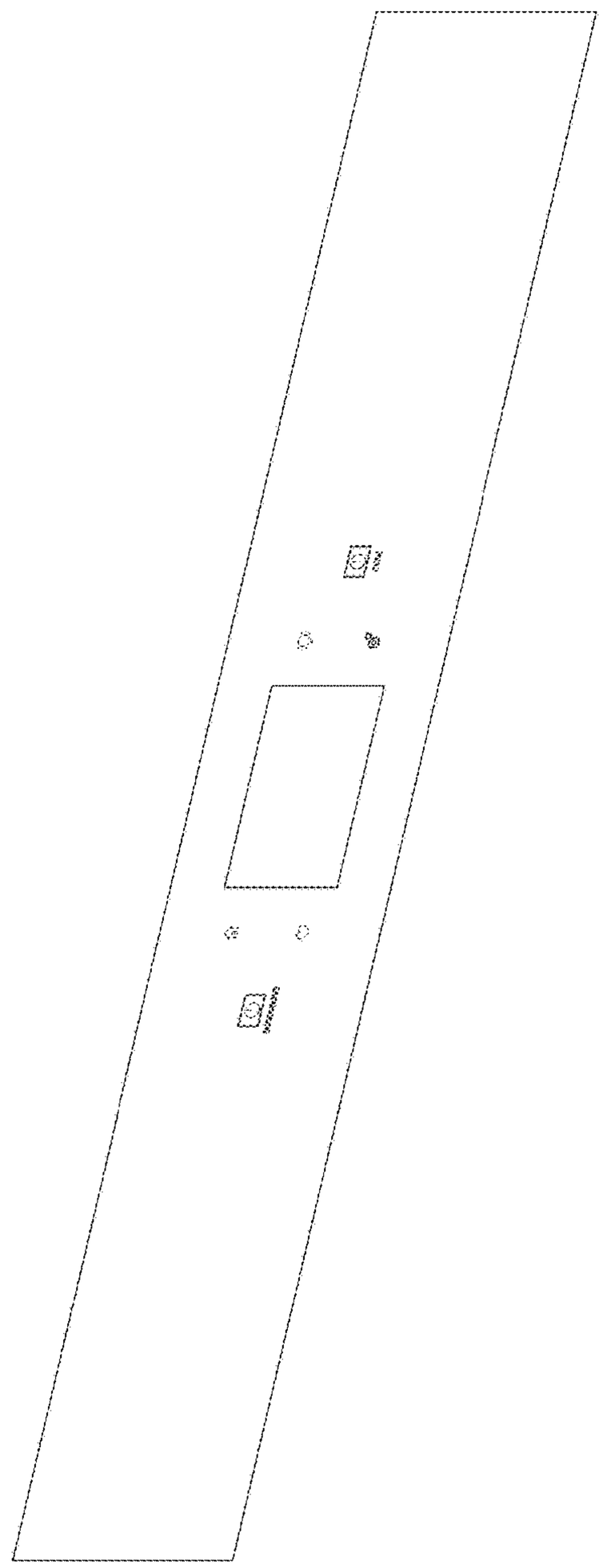

FIG. 11

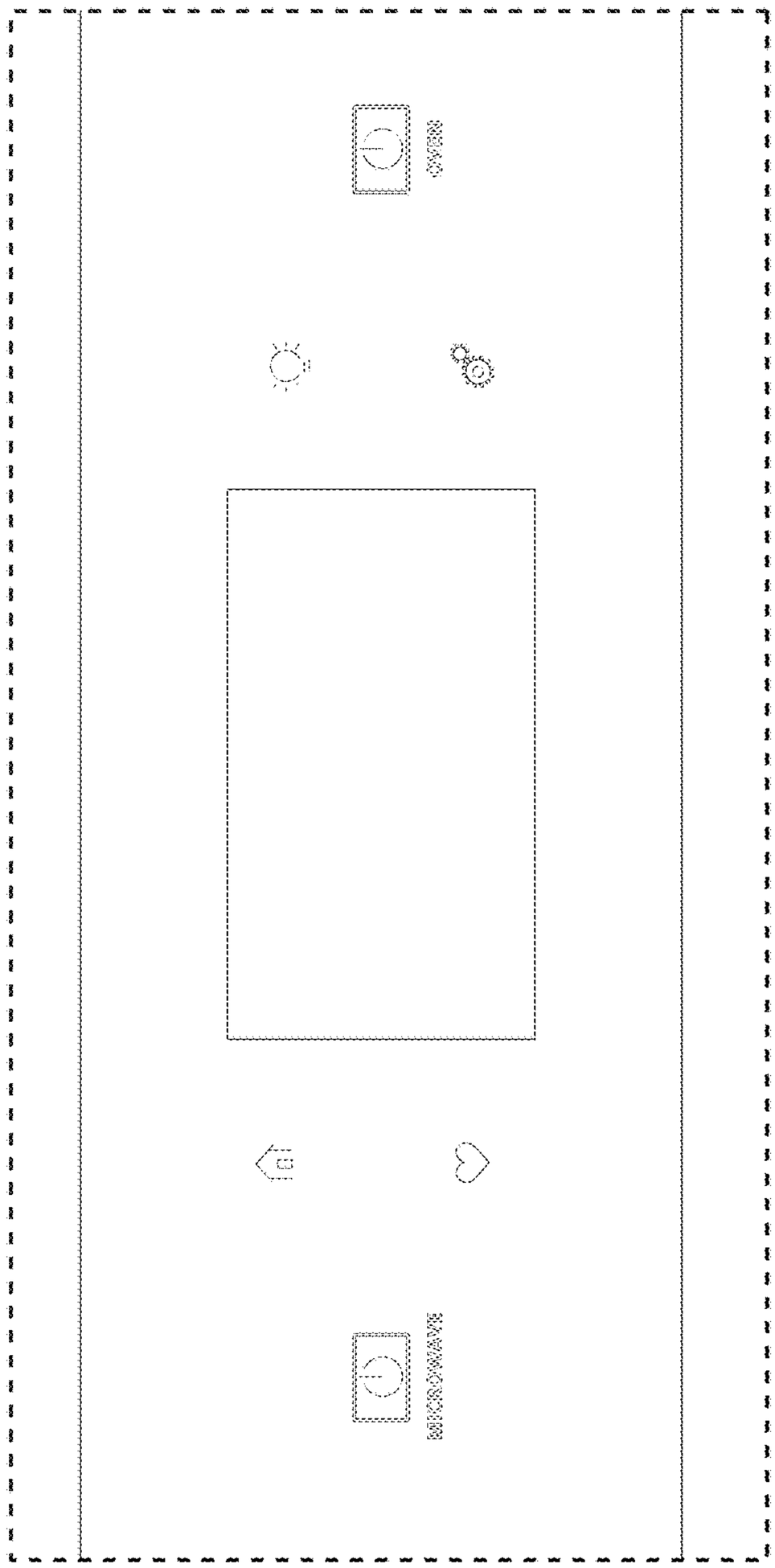

FIG. 12

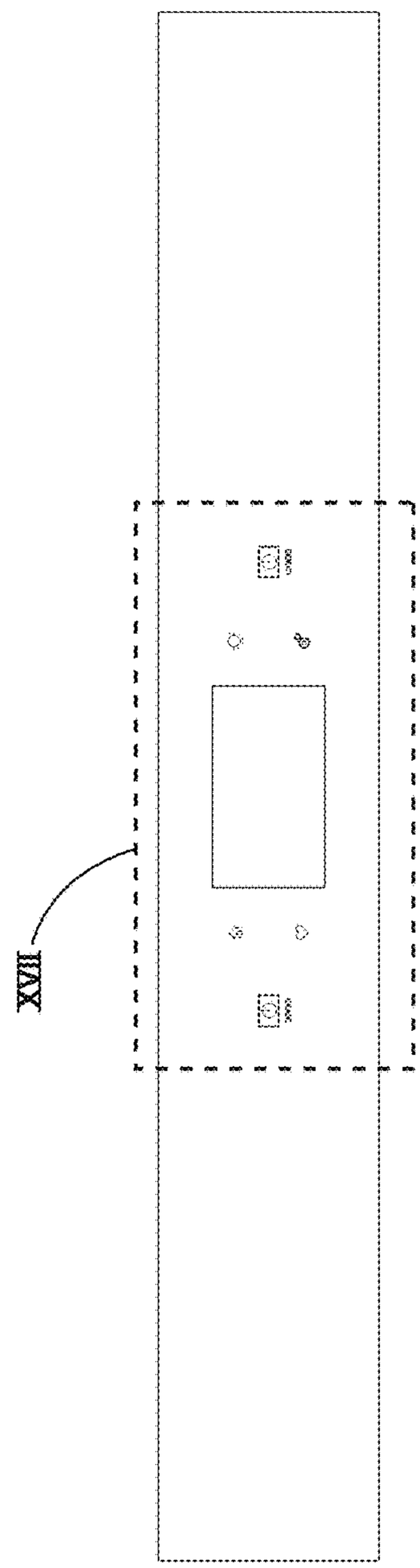

FIG. 13

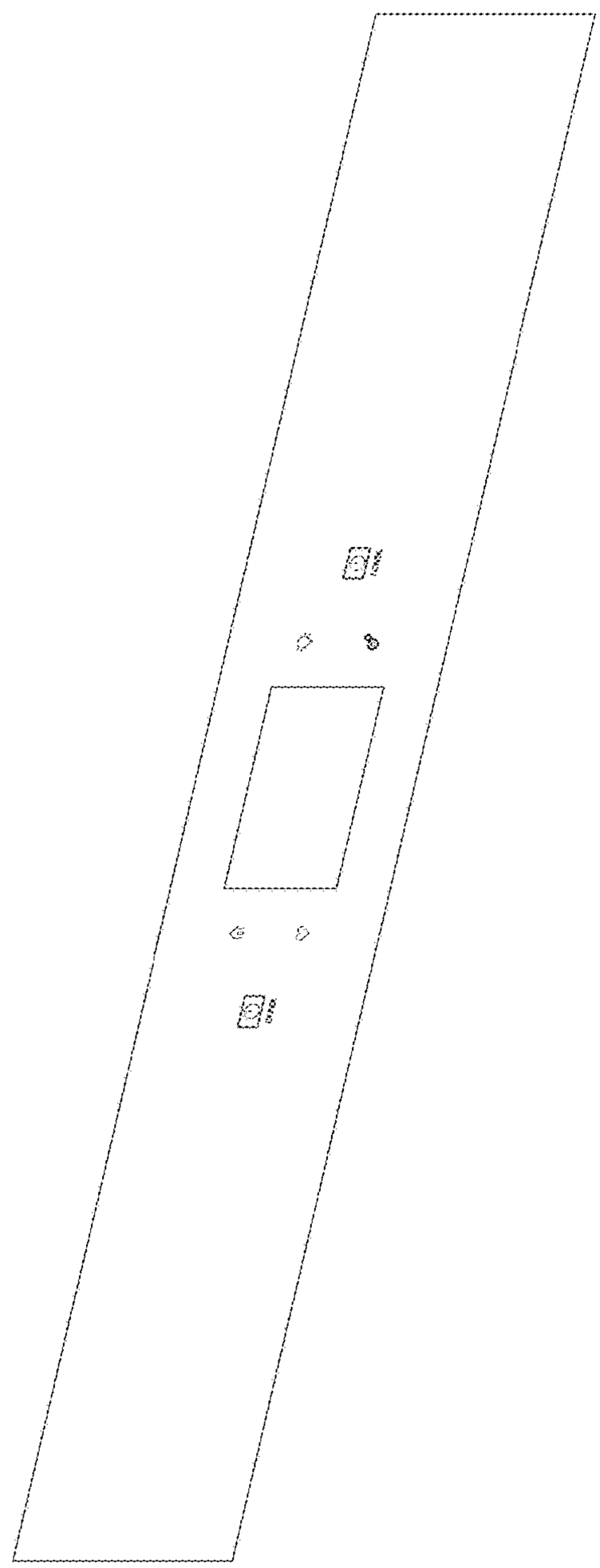

FIG. 14

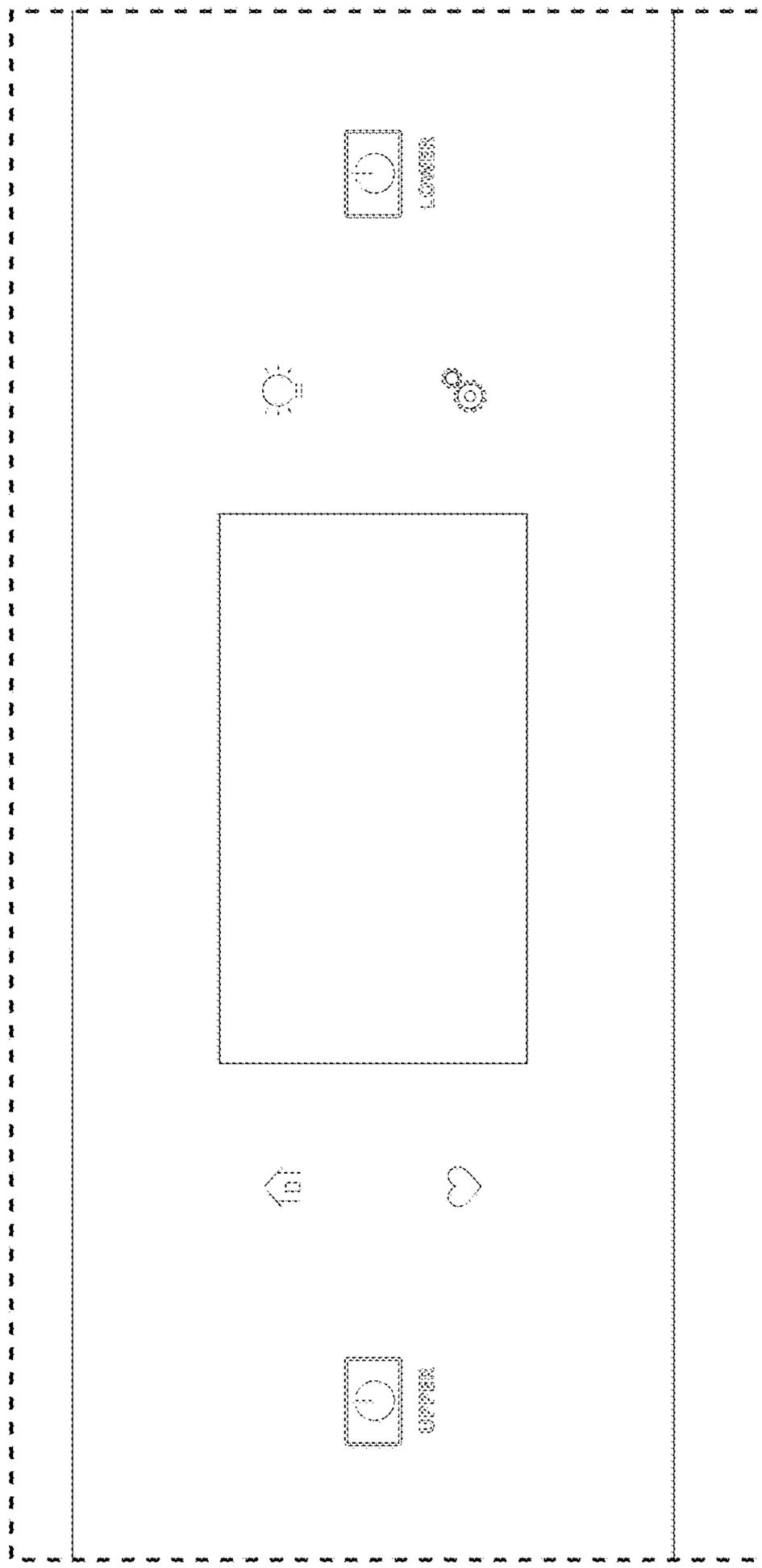

FIG. 15

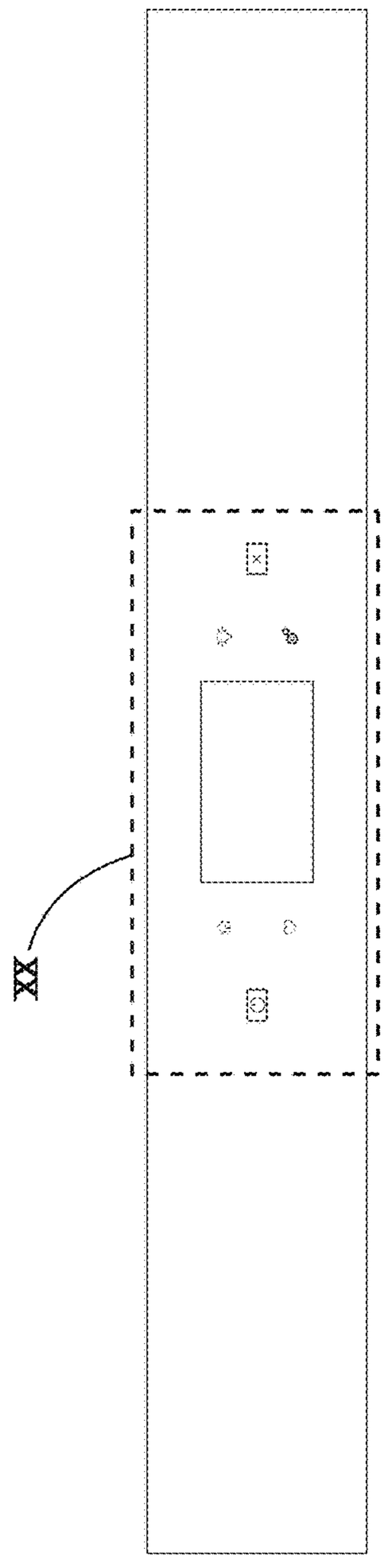

FIG. 16

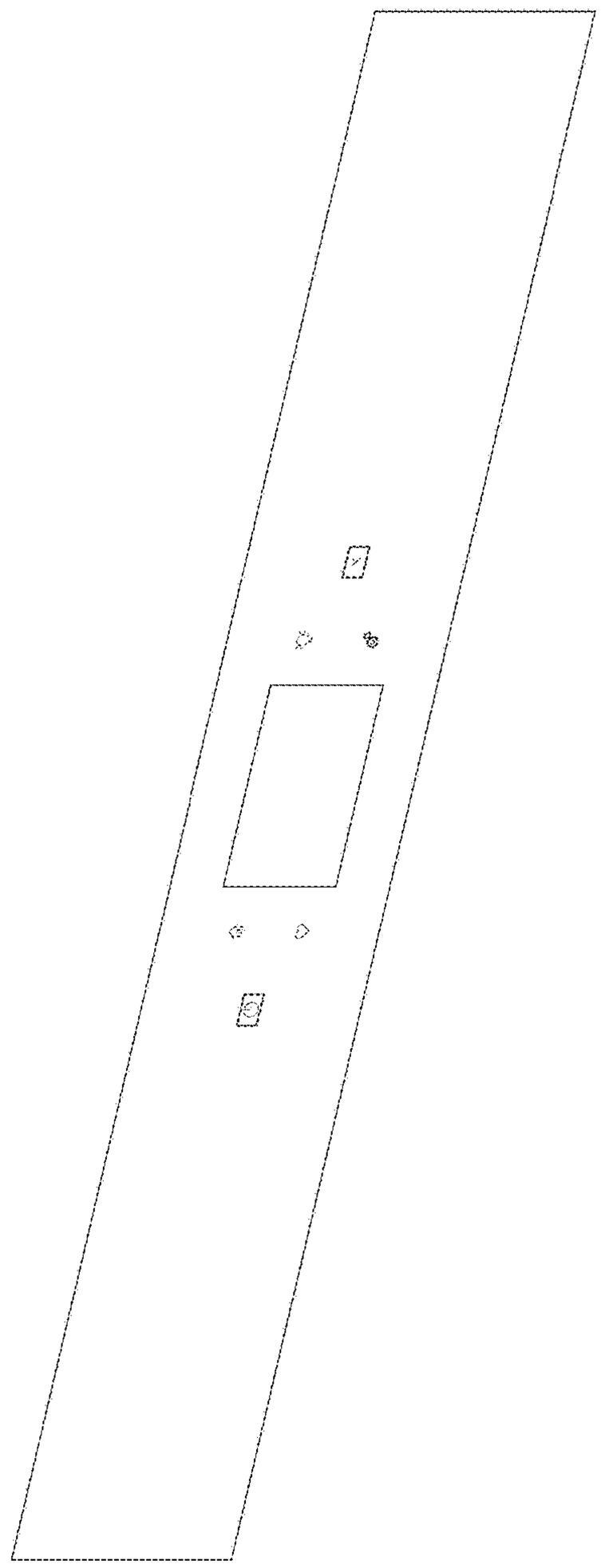

FIG. 17

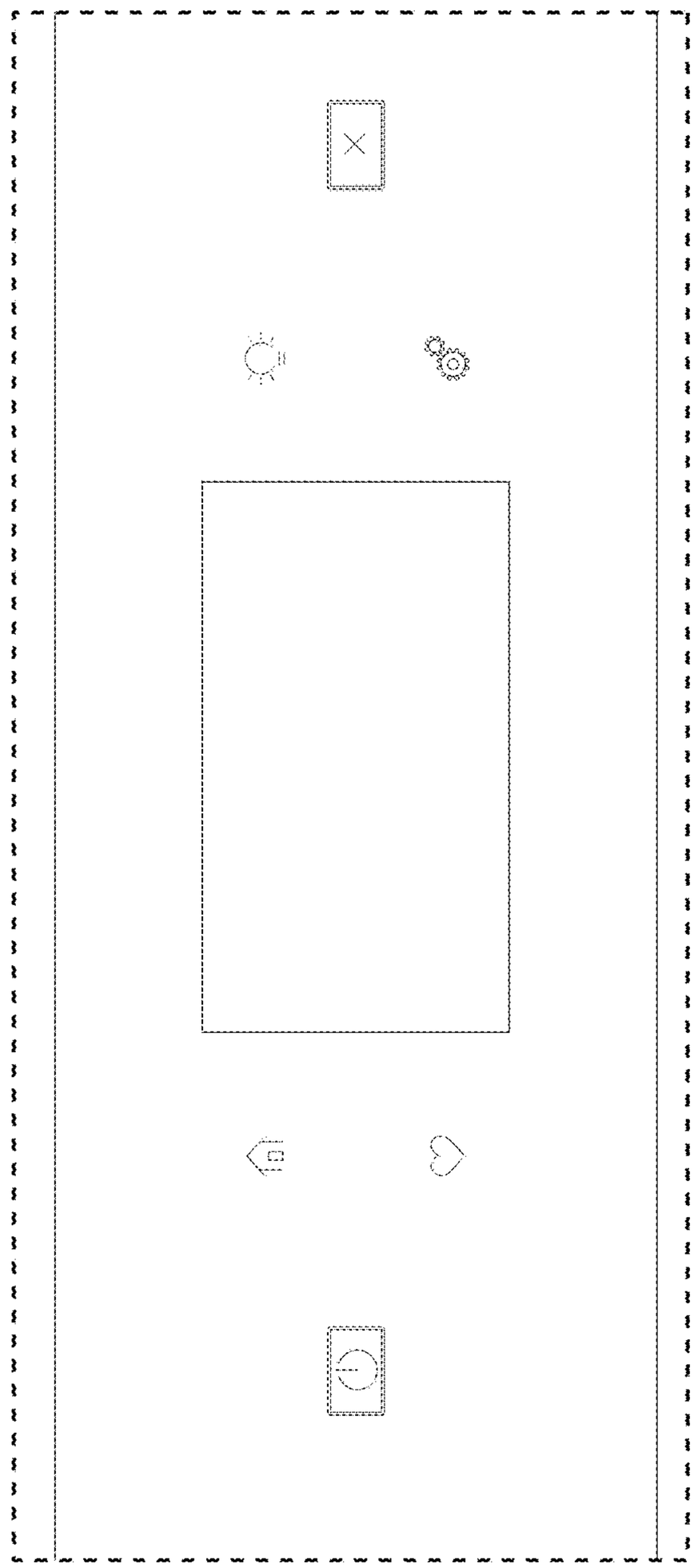

FIG. 18