US00D862635S

(12) United States Design Patent

Madden

(10) Patent No.: US D862,635 S
(45) Date of Patent: ** Oct. 8, 2019

(54) **BIRD EXCLUSION DEVICE**

(71) Applicant: **Richard Brett Madden**, Point Pleasant Beach, NJ (US)

(72) Inventor: **Richard Brett Madden**, Point Pleasant Beach, NJ (US)

(73) Assignee: **War Bird Manufacturing, Inc.**, Tinton Falls, NJ (US)

(**) Term: **15 Years**

(21) Appl. No.: **29/631,754**

(22) Filed: **Jan. 2, 2018**

(51) **LOC (12) Cl.** **22-06**

(52) **U.S. Cl.**
USPC **D22/120**

(58) **Field of Classification Search**
USPC D22/119–120; 119/713; 52/98, 101, 52/288.1, 588.1, 717.05
CPC A01M 29/32; E04D 13/00; E04D 13/004; E04B 1/72; E04F 15/10; E04F 15/02038
See application file for complete search history.

(56) **References Cited**

U.S. PATENT DOCUMENTS

D404,107	S *	1/1999	Dimston	D22/120
D546,410	S *	7/2007	Wiesener	D22/120
D625,381	S *	10/2010	Asaoka	D22/120
8,640,397	B2	2/2014	Donoho	
8,689,497	B2	4/2014	Donoho	
8,925,256	B2	1/2015	Donoho	
9,185,900	B2	11/2015	Donoho	
D842,424	S *	3/2019	Turner	D22/120
2006/0207195	A1 *	9/2006	Donoho	A01M 29/32 52/101
2011/0209419	A1 *	9/2011	Lippie	A01M 29/32 52/101
2014/0033623	A1 *	2/2014	Donoho	A01M 29/32 52/101
2014/0033632	A1 *	2/2014	Chang	E04F 15/02038 52/588.1

OTHER PUBLICATIONS

BirdSlide product catalog, available publicly prior to Jan. 2, 2018.
Bird Slope product catalog, available publicly prior to Jan. 2, 2018.
Toni Bird Slides product cut sheet, available publicly prior to Jan. 2. 2018.

* cited by examiner

Primary Examiner — Catherine R Oliver-Garcia
(74) *Attorney, Agent, or Firm* — Charney IP Law LLC

(57) **CLAIM**

The ornamental design for a bird exclusion device, as shown and described.

DESCRIPTION

FIG. **1** is a top perspective view of a bird exclusion device showing my new design;
FIG. **2** is a bottom perspective view of the bird exclusion device of FIG. **1**;
FIG. **3** is a right side view of the bird exclusion device of FIG. **1**;
FIG. **4** is a left side view of the bird exclusion, device of FIG. **1**;
FIG. **5** is a front view of the bird exclusion device of FIG. **1**;
FIG. **6** is a rear view of the bird exclusion device of FIG. **1**;
FIG. **7** is a bottom view of the bird exclusion device of FIG. **1**; and,
FIG. **8** is a top view of the bird exclusion device of FIG. **1**.
The broken lines depict environmental structure and are for illustrative purposes only and form no part of the claimed design.

1 Claim, 5 Drawing Sheets

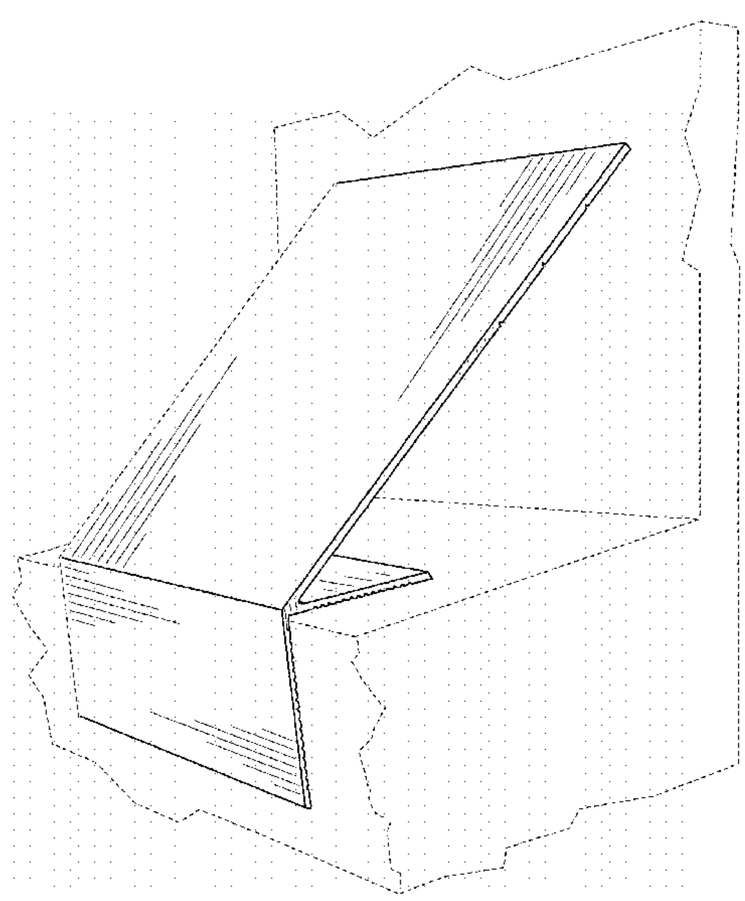

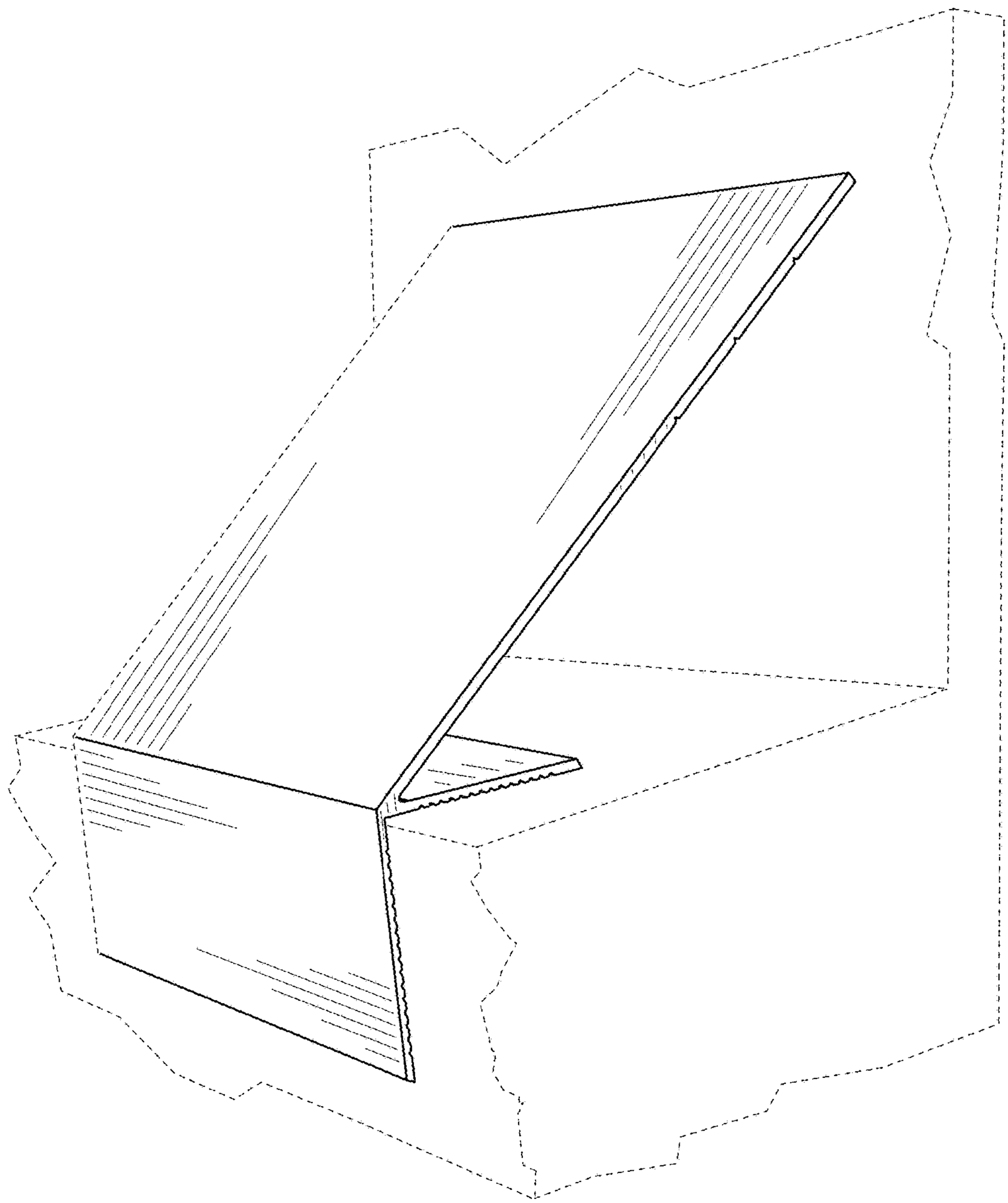

FIG. 1

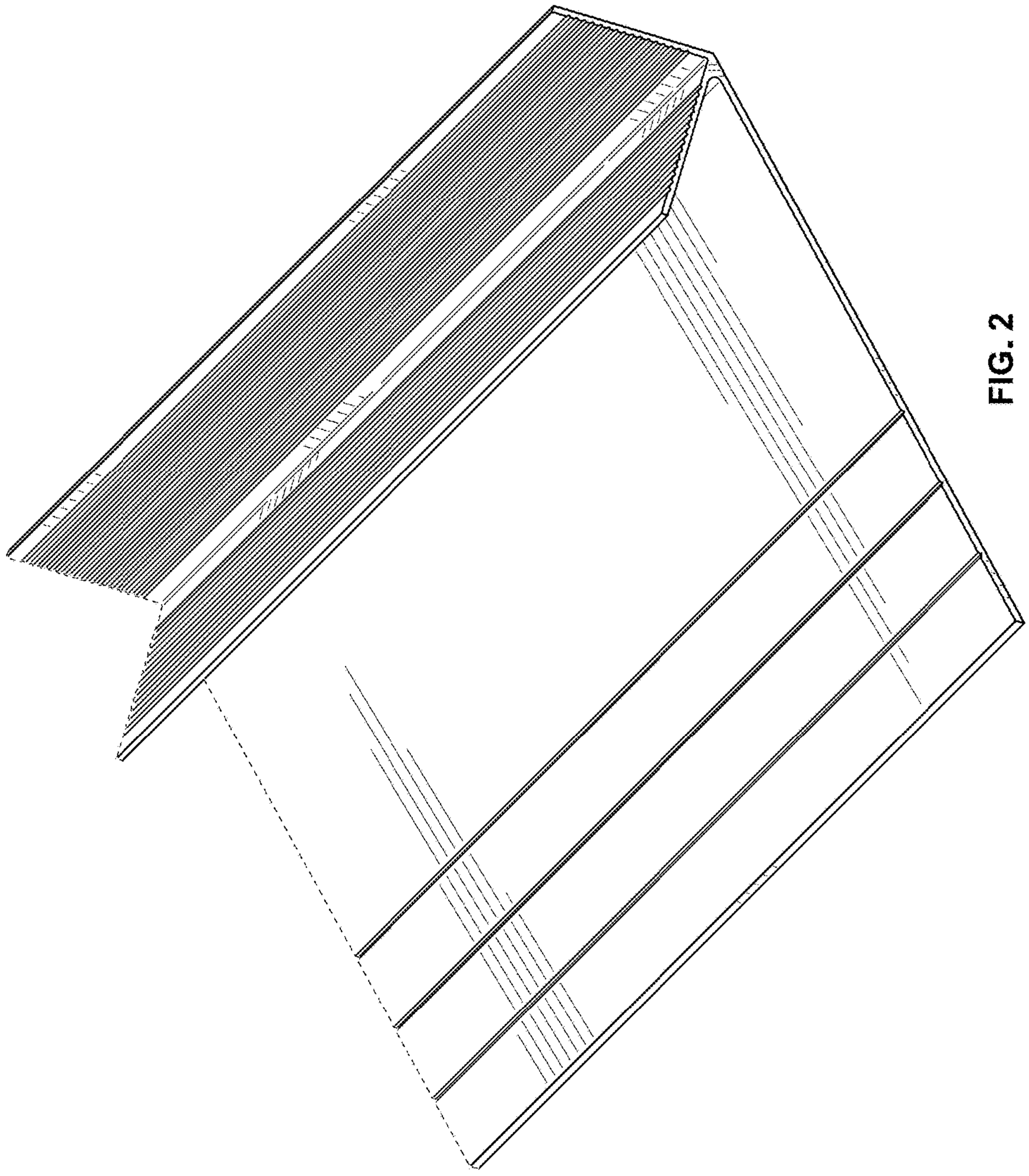

FIG. 2

FIG. 3

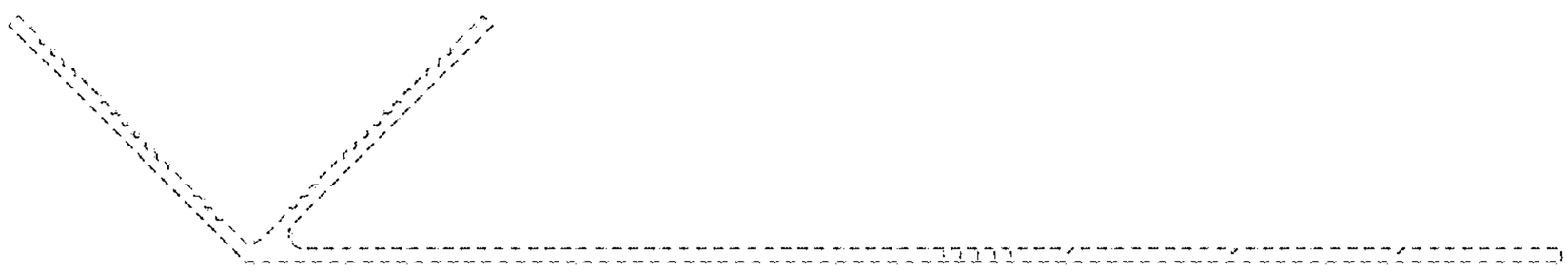

FIG. 4

FIG. 5

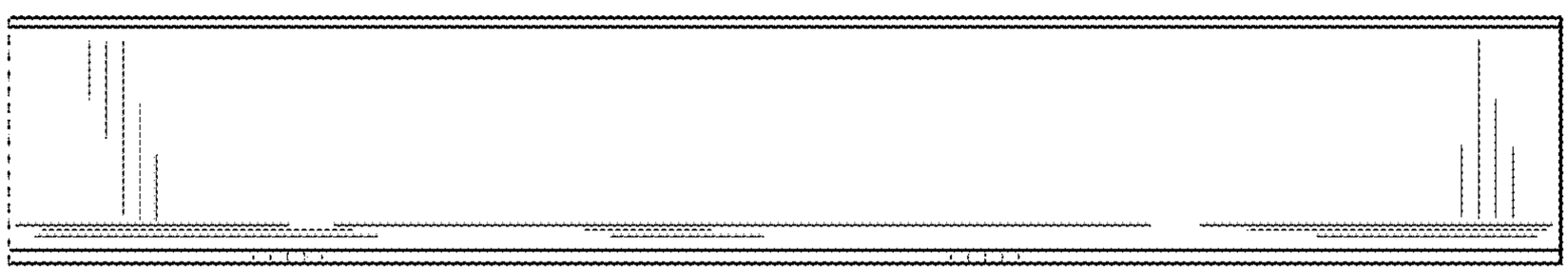

FIG. 6

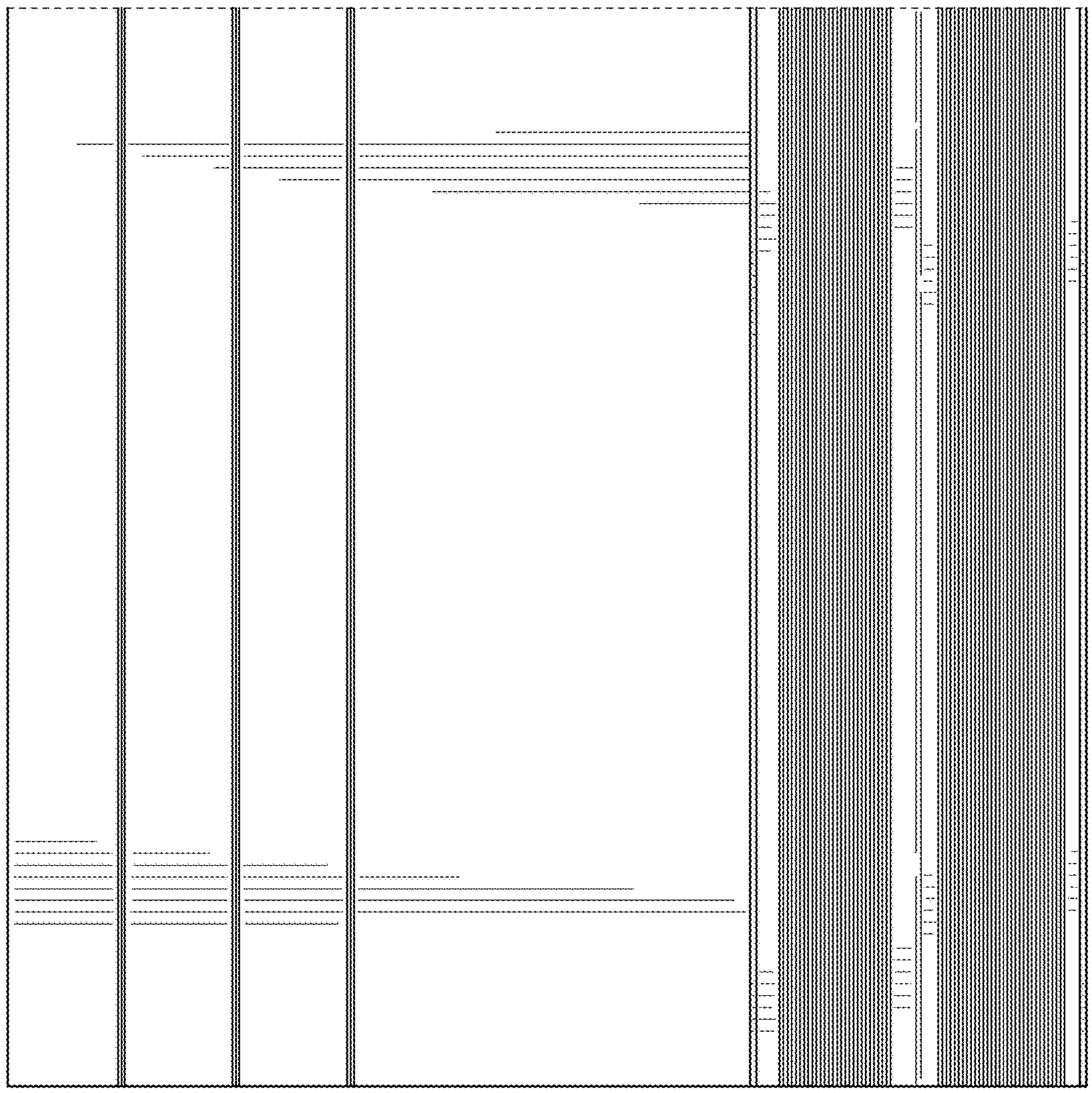

FIG. 7

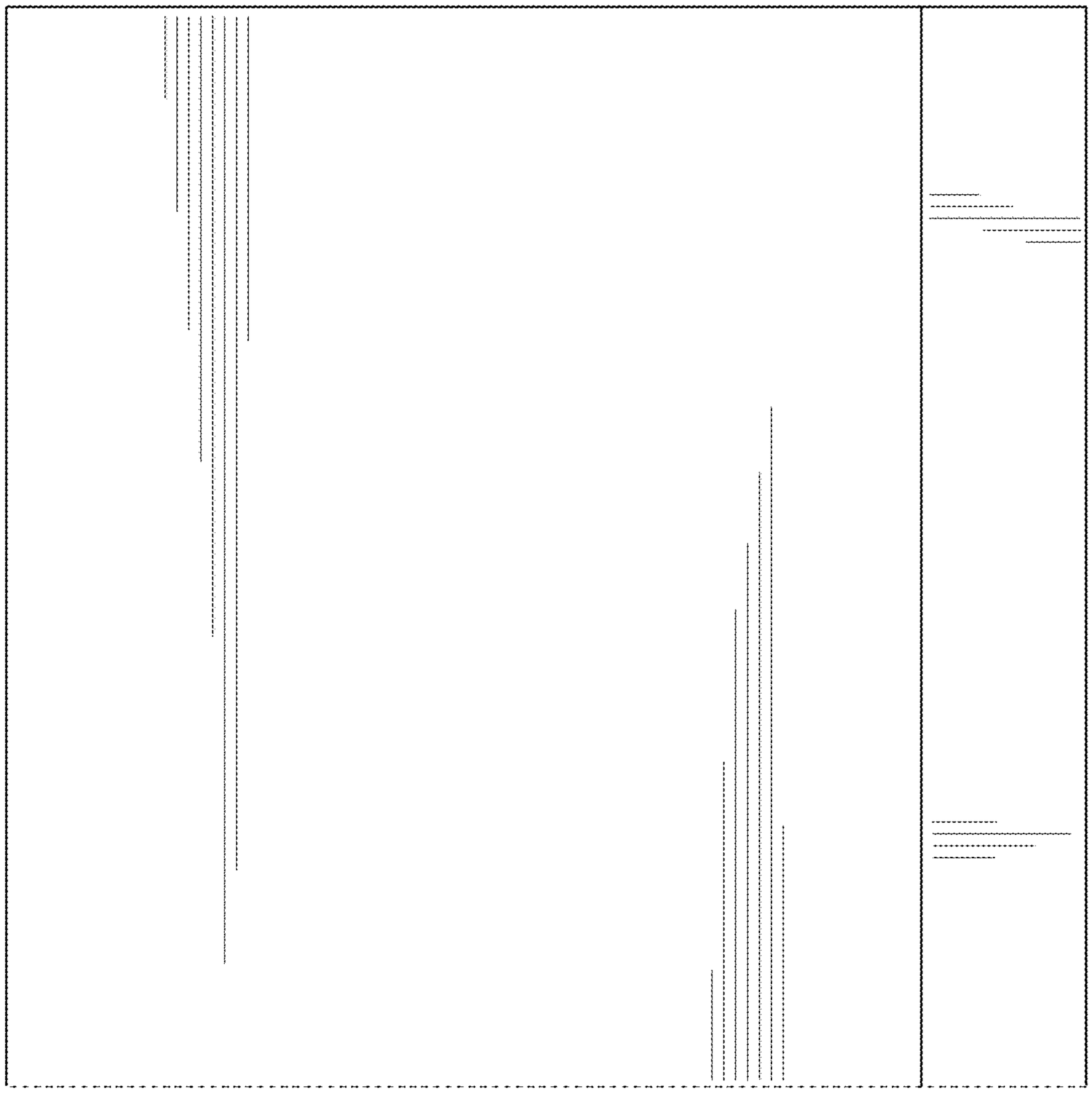

FIG. 8