US00D861003S

(12) United States Design Patent

Vogel et al.

(10) Patent No.: US D861,003 S
(45) Date of Patent: ** Sep. 24, 2019

(54) **SOCKET**

(71) Applicant: **NITE IZE, INC.**, Boulder, CO (US)

(72) Inventors: **Frank Vogel**, Boulder, CO (US); **Bowden Ormsbee**, Longmont, CO (US); **Rex Stevens**, Longmont, CO (US)

(73) Assignee: **Nite Ize, Inc.**, Boulder, CO (US)

(**) Term: **15 Years**

(21) Appl. No.: **29/650,702**

(22) Filed: **Jun. 8, 2018**

(51) **LOC (12) Cl.** **08-07**

(52) **U.S. Cl.**
USPC **D14/447**

(58) **Field of Classification Search**
USPC D14/447, 432, 434, 439, 440, 451, 452, D14/457, 239, 250, 253, 203.7, 336, 337; D6/406.3, 406.4, 406.5, 406.6; D8/363, D8/373, 380; D12/415; D21/330, 331; D3/218
CPC A47B 21/04; A47B 2097/006; A47B 2097/005; A47B 2023/049; A45C 2011/002; A45C 2011/003; F16M 2200/00; F16M 13/00
See application file for complete search history.

(56) **References Cited**

U.S. PATENT DOCUMENTS

D696,673	S	*	12/2013	Vogel	D14/447
D704,199	S	*	5/2014	Byun	D14/447
D709,559	S	*	7/2014	Baumann	D21/398
D709,564	S	*	7/2014	Baumann	D21/398
D723,573	S	*	3/2015	Padro	D14/447
D731,496	S	*	6/2015	Voorhees	D14/447
D734,746	S	*	7/2015	Vogel	D14/253
D784,907	S	*	4/2017	Lu	D12/415
D789,920	S	*	6/2017	Zhang	D14/253
D799,468	S	*	10/2017	Chen	D14/253
D809,449	S	*	2/2018	Zhang	D12/415
D843,307	S	*	3/2019	Jung	D12/415
2018/0259119	A1	*	9/2018	Zhu	F16M 13/02

* cited by examiner

Primary Examiner — Angela J Lee

(74) *Attorney, Agent, or Firm* — Haynes and Boone, LLP

(57) **CLAIM**

The ornamental design for the socket, as shown and described.

DESCRIPTION

FIG. **1** shows a top front perspective view of a socket;

FIG. **2** shows a bottom front perspective view of the socket of FIG. **1**;

FIG. **3** shows a side view of the socket of FIG. **1**;

FIG. **4** shows a top view of the socket of FIG. **1**; and,

FIG. **5** shows a bottom view of the socket of FIG. **1**.

1 Claim, 2 Drawing Sheets

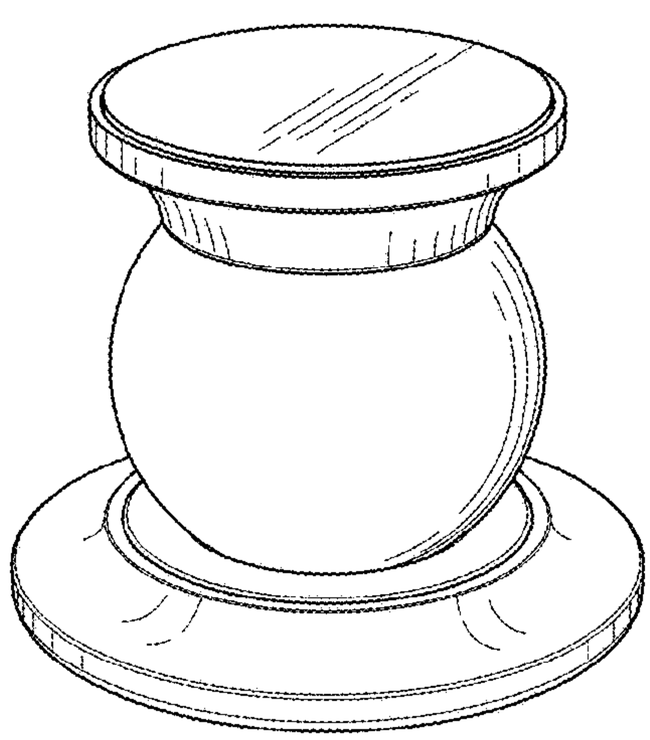

FIG. 1

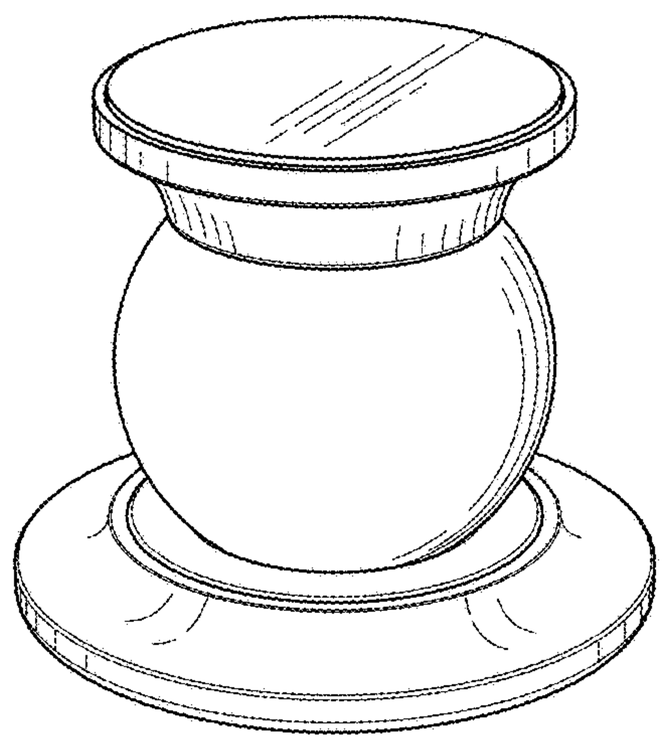

FIG. 2

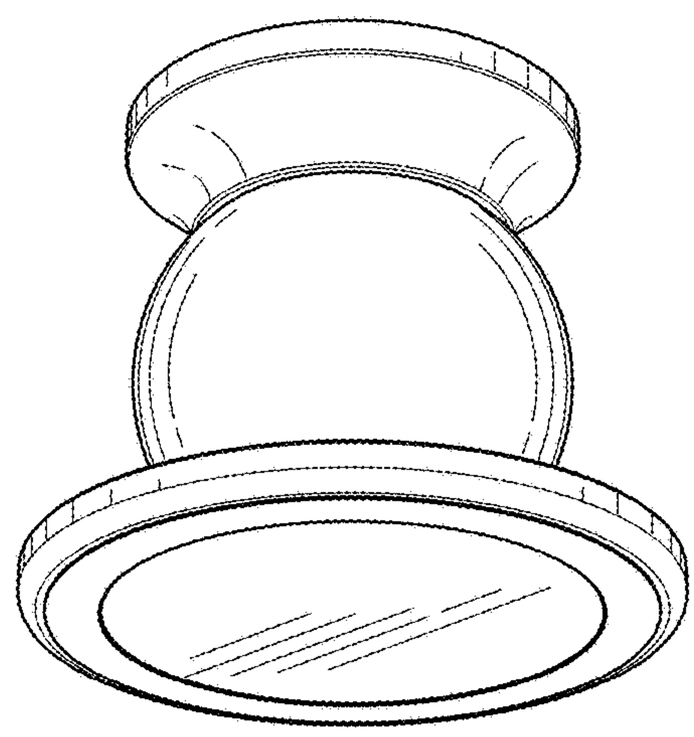

FIG. 3

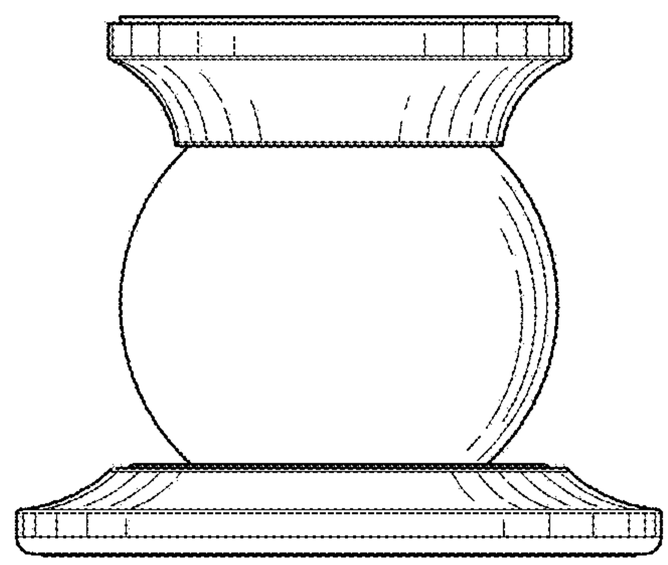

FIG. 4

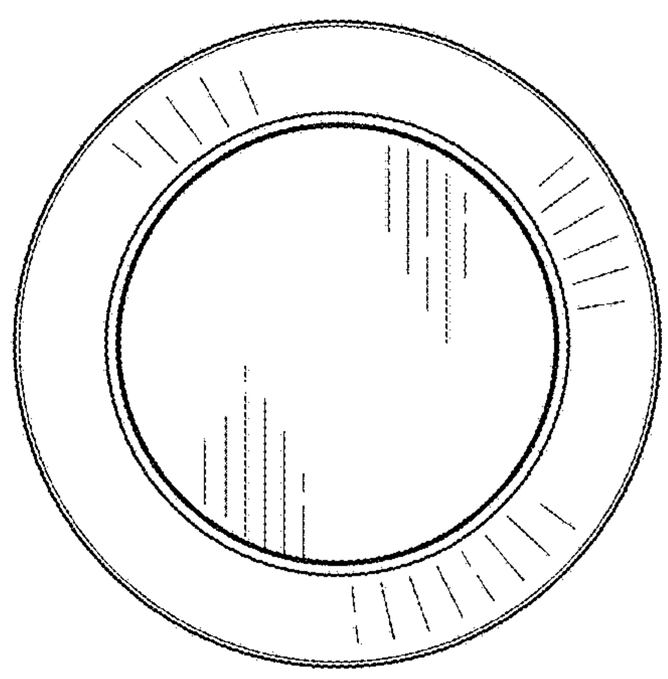
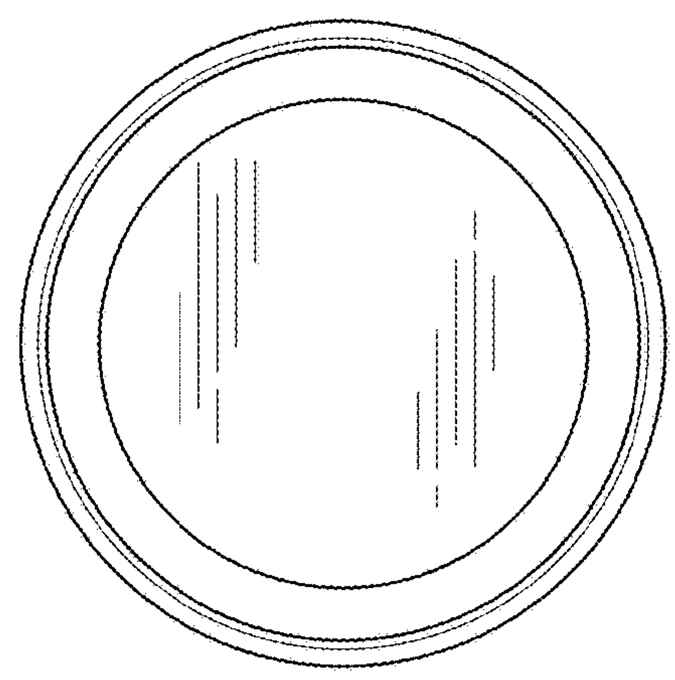
FIG. 5