US00D860996S

(12) United States Design Patent

Jhun et al.

(10) Patent No.: US D860,996 S
(45) Date of Patent: ** Sep. 24, 2019

(54) **FLIP TOP UNIT**

(71) Applicant: **Crestron Electronics, Inc.**, Rockleigh, NJ (US)

(72) Inventors: **Sae Jhun**, Bayside, NY (US); **Wendy Feldstein**, Old Tappan, NJ (US)

(73) Assignee: **Crestron Electronics, Inc.**, Rockleigh, NJ (US)

(**) Term: **15 Years**

(21) Appl. No.: **29/629,033**

(22) Filed: **Dec. 11, 2017**

(51) **LOC (12) Cl.** **14-02**

(52) **U.S. Cl.**
USPC **D14/432**; D14/307

(58) **Field of Classification Search**
USPC D14/432, 433, 439, 445, 446, 300, 348, D14/302, 341, 441, 248, 453, 427, 426; 361/679.4, 679.45, 679.02, 679.31; 174/354, 359; 455/557, 41.2, 418, 566; D10/30, 37, 39, 65; 345/2.3, 520
CPC .. H04B 1/38; H04B 7/00; H04M 3/00; G09G 5/00; G06F 13/14
See application file for complete search history.

(56) **References Cited**

U.S. PATENT DOCUMENTS

6,046,405	A	4/2000	Obermann et al.	
6,162,071	A	12/2000	Muller	
D460,736	S	7/2002	Pincek et al.	
D465,201	S	11/2002	Gershfeld	
D473,525	S	4/2003	Pincek et al.	
6,802,577	B2	10/2004	Gershfeld	
D501,664	S *	2/2005	Minamio	D14/432
6,942,501	B2	9/2005	Kissinger et al.	
D512,964	S	12/2005	Kissinger et al.	
D513,493	S	1/2006	Feldstein et al.	
D516,513	S	3/2006	Kissinger et al.	
D526,961	S	8/2006	Kissinger et al.	
D537,039	S	2/2007	Pincek	
D537,785	S	3/2007	Pincek	

(Continued)

OTHER PUBLICATIONS

AMX, HydraPort: Connecting the Perfect Meeting, Product Guide, Rev. V3 (Sep. 8, 2014), available at pdf.archiexpo.com/pdf/amx/hydraport/51274-177337.html.

(Continued)

Primary Examiner — Austin Murphy
(74) *Attorney, Agent, or Firm* — Crestron Electronics, Inc.

(57) **CLAIM**

The ornamental design for a flip top unit, as shown and described.

DESCRIPTION

FIG. **1** illustrates a perspective view of a flip top unit showing the lid in a closed position.
FIG. **2** illustrates a top plan view of a flip top unit showing the lid in a closed position.
FIG. **3** illustrates a right elevation view of a flip top unit.
FIG. **4** illustrates a left elevation view of a flip top unit.
FIG. **5** illustrates a front elevation view of a flip top unit.
FIG. **6** illustrates a rear elevation view of a flip top unit.
FIG. **7** illustrates a perspective view of a flip top unit showing the lid in an open position.
FIG. **8** illustrates a top plan view of a flip top unit showing the lid in an open position.
FIG. **9** illustrates a perspective view of an installed flip top unit showing the lid in a closed position.
FIG. **10** illustrates a perspective view of an installed flip top unit showing the lid in an open position; and,
FIG. **11** illustrates a bottom plan view of a flip top unit.
The broken line portion of the figure drawings is included to show unclaimed subject matter only and forms no part of the claimed design.

1 Claim, 11 Drawing Sheets

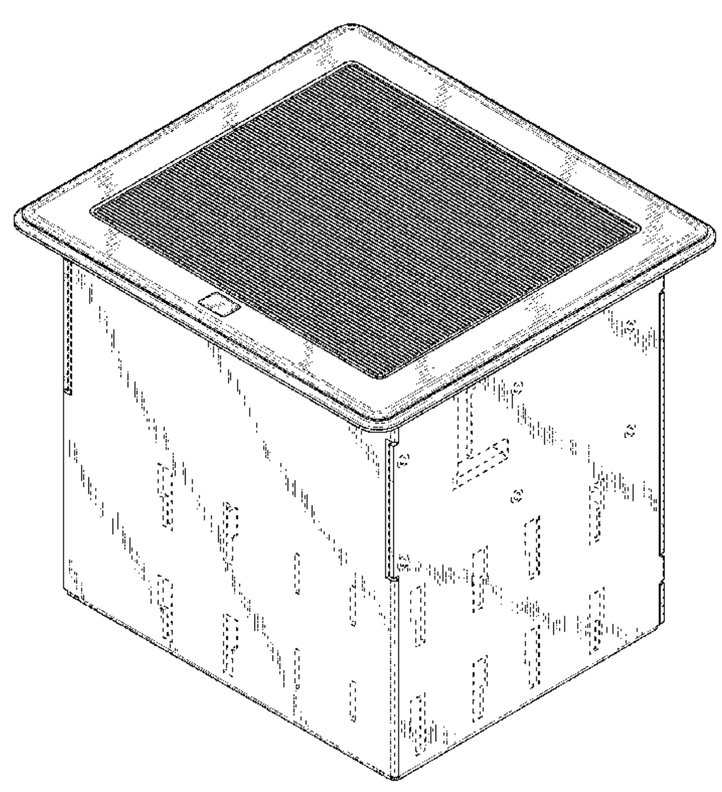

(56) **References Cited**

U.S. PATENT DOCUMENTS

7,312,393	B2		12/2007	McCarthy et al.
D569,863	S		5/2008	Feldstein et al.
7,414,193	B1		8/2008	Le
7,541,539	B2		6/2009	Le
7,667,145	B2		2/2010	Dinh et al.
D626,542	S	*	11/2010	Libman D13/139.4
D628,097	S		11/2010	Libman et al.
D628,098	S		11/2010	Libman et al.
D628,099	S	*	11/2010	Libman D10/49
D638,314	S		5/2011	Libman et al.
D638,315	S	*	5/2011	Libman D10/49
D639,680	S		6/2011	Libman et al.
D639,681	S	*	6/2011	Rodriguez D10/49
D640,577	S	*	6/2011	Libman D10/49
D640,939	S		7/2011	Libman et al.
D640,940	S	*	7/2011	Libman D10/49
7,989,710	B2		8/2011	Hansen et al.
D645,404	S	*	9/2011	Chuang D13/139.1
D657,315	S		4/2012	Feldstein et al.
D664,050	S	*	7/2012	Rodriguez D10/49
D678,786	S	*	3/2013	Rodriguez D10/49
D686,992	S		7/2013	Eisen
D694,195	S	*	11/2013	Gammon D13/162
8,943,978	B2		2/2015	Soper et al.
D734,729	S	*	7/2015	Chaloupecky D10/49
D735,198	S	*	7/2015	Song D14/432
D735,199	S	*	7/2015	Song D14/432
D735,724	S	*	8/2015	Song D14/432
9,257,776	B2		2/2016	Kramer
9,309,087	B2		4/2016	Laube et al.
9,425,563	B2		8/2016	Laube et al.
D775,080	S	*	12/2016	Newhouse D13/139.4
9,553,413	B2		1/2017	Laube et al.
9,680,262	B2		6/2017	Laube et al.
9,706,833	B2		7/2017	Newhouse et al.
D801,285	S	*	10/2017	Timmins D13/156
2003/0070592	A1		4/2003	Grasse et al.
2009/0165679	A1		7/2009	Bakker et al.
2014/0265753	A1		9/2014	Gershfeld et al.
2014/0374531	A1		12/2014	Laube et al.
2017/0093097	A1		3/2017	Laube et al.

OTHER PUBLICATIONS

Arthur Holm, Albiral Display Solutions SL, Catalog, EN2016-2017, available at www.arthurholm.com/wp-content/uploads/2017/03/AH_Catalogue_2017.pdf.

Bachmann Electrical Engenering Ltd., Facility Solutions, System solutions for Office, conference and meeting rooms, Jun. 2016, availble at genproel-el.gr/data/documents/2017.pdf.

Crestron, Crestron FlipTops, D4520-C_201410, 2014, available at www.crestron.com/downloads/pdf/product_brochures/crestron_fliptops_brochure.pdf.

Extron, Cable Cubby 202, 2014, available at www.extron.com/download/files/brochure/CC_202_Printable_A4.pdf.

Extron, Cable Cubby 500, 2014, available at www.extron.com/download/files/brochure/CC_500_Printable_A4.pdf.

Extron, Cable Cubby 700, 2014, available at www.extron.com/download/files/brochure/CC_700_Printable_A4.pdf.

Extron, Cable Cubby 1200, 2014, available at www.extron.com/download/files/brochure/.

Extron, Cable Cubby 1400, 2014, available at www.extron.com/download/files/brochure/.

Extron, Cable Cubby Series 2, Mar. 2016, 68-2604-01, REV. C, available at www.extron.com/download/files/brochure/cable_cubby_series_2_verA4.pdf.

Extron Catalog, AAP—Architectural Adapter Plates, 2012 Product Catalog, available at www.extron.com/download/files/general/aaps_12cat_en_pdf.

FSR Inc., T6 Flex, LIT1434A, 2015, available at fsrinc.com/documents/spec-sheet/9187-lit1434c-t6-flex-spec-sheet-pdf/file.

FSR Inc., Table Boxes, LIT1187H, 2014, available at www.novotech.com.mx/wp-content/uploads/2016/03/1187H-Table-Box-Brochure.pdf.

Herman Miller, Inc., Logic Power Access Solutions, 2015, available at www.hermanmiller.com/content/dam/hermanmiller/documents/product_literature/product_sheets/Logic_Power_Access_Solutions_product_sheet.pdf.

Extron Electronics, "Hideaway" Family Brochure, 2002.

Extron Electronics, Extron® Hideaway Series Brochure, 2002.

Kramer Electronics Ltd., K-Able/XL Box Cable Retractor, User Manual, P/N: 2900-300441 Rev 3, 2015, available at k.kramerav.com/downloads/manuals/k-able_xl_box.pdf.

Kindermann, MultiMedia connection sytems, 2014, available at www.kindermann.de/fileadmin/medien/printmedien/MultiMedia_connection_systems/GB/MultiMedia_connection_systems_GB.pdf.

Legrand, Wiremold® AVIP Series Device Plates, ED1670R3—Updated Jan. 2015, available at www.legrand.us/wiremold.aspx.

Legrand, Wiremold®, DEQUORUM™ Flip-Up Table Boxes, ED1755 0715, 2015, available at www.middleatlantic.com.

Legrand, Wiremold® Table Boxes, Table Boxes bring technology to the point-of-use, ED1706R5—Updated Mar. 2016 , available at www.legrand.us/wiremold.aspx.

Legrand, wiremold®, InteGreat™ A/V Table Box, ED1699R1 0913, 2013, available at www.legrand.us/wiremold.aspx.

Legrand, wiremold®, Meeting Room Solutions, ED1710, 2013, available at www.legrand.us/wiremold.aspx.

Legrand, wiremold® Table Boxes, ED1652R3—Updated Apr. 2016, available at www.legrand.us/wiremold.aspx.

Soltec, LCD-TFT Solutions, 2015, available at dvs.rs/wp-content/uploads/2017/07/ENGLISH-SOLTEC-CATALOGUE.pdf.

AMX, "HPX-MSP-7-BL—7" HydraPort Touch Connection Port, Black, Closed", https://trade.amx.com//assets/logosAndPhotos/HPX-MSP-7-BL_Closed.png.

AMX, "HPX-MSP-7-BL—7" HydraPort Touch Connection Port, Black", https://trade.amx.com//assets/logosAndPhotos/HPX-MSP-7-BL.png.

AMX, "HPX-MSP-7-SL—7" HydraPort Touch Connection Port, Silver, Closed", https://trade.amx.com//assets/logosAndPhotos/HPX-MSP-7-SL_Closed.png.

AMX, "HPX-MSP-7-SL—7" HydraPort Touch Connection Port, Silver", https://trade.amx.com//assets/logosAndPhotos/HPX-MSP-7-SL.png.

* cited by examiner

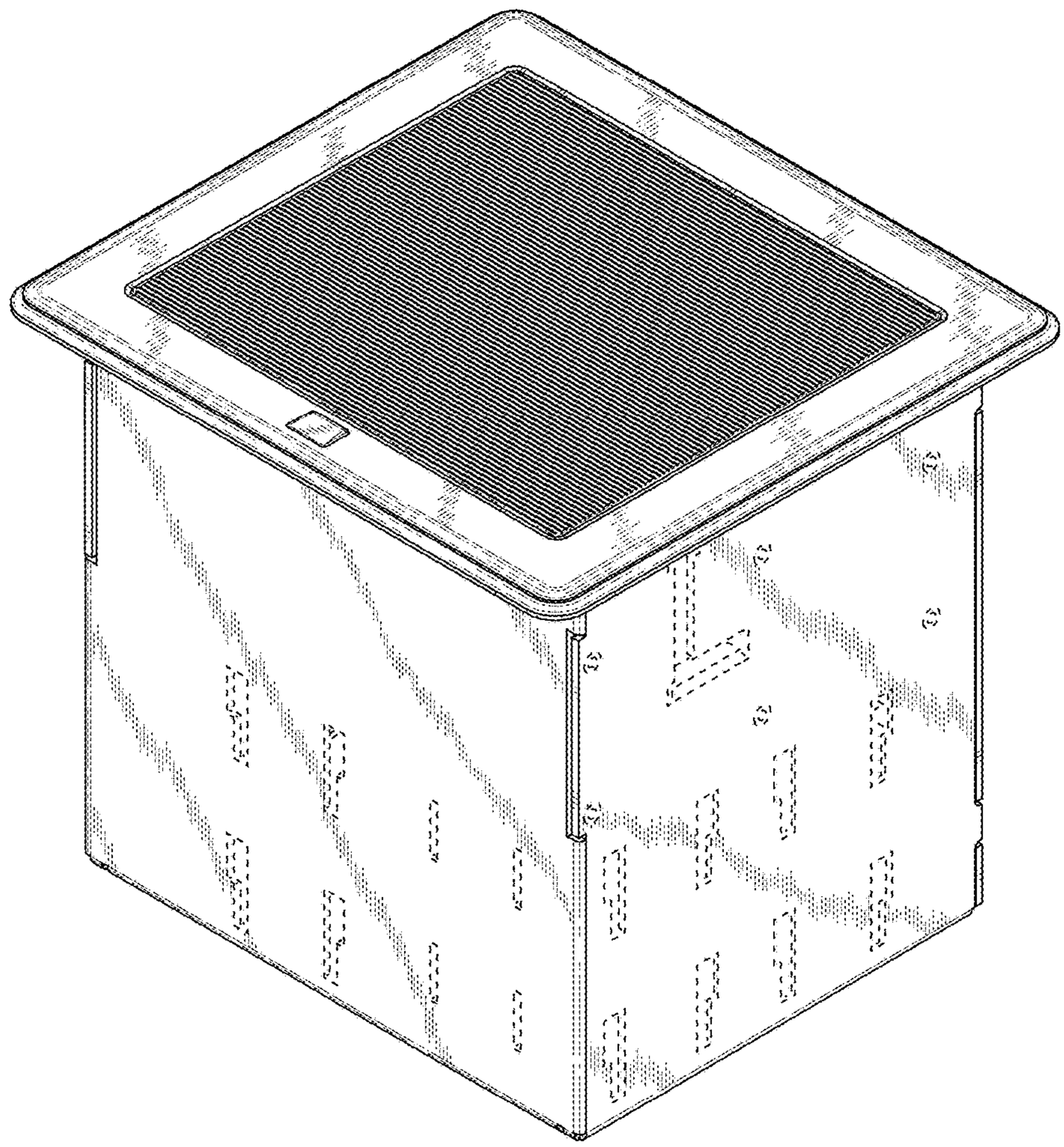

FIG. 1

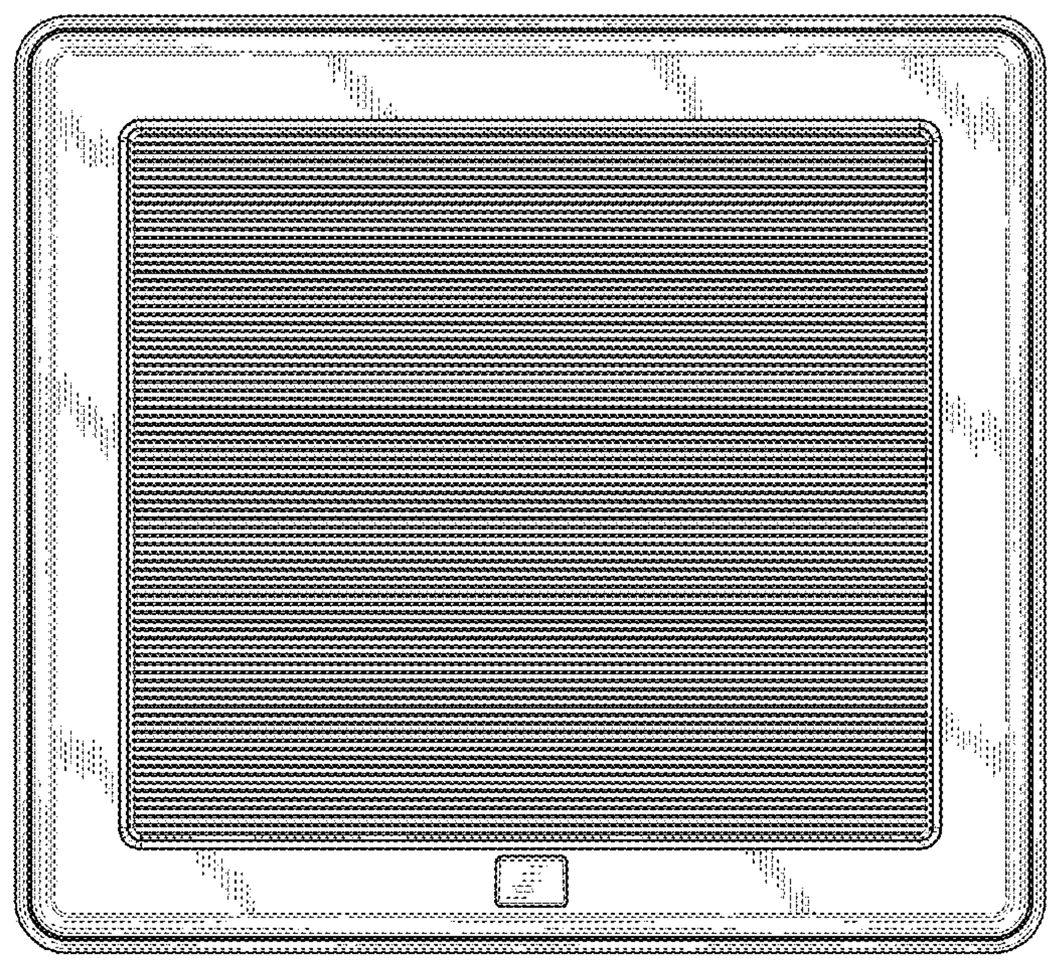

FIG. 2

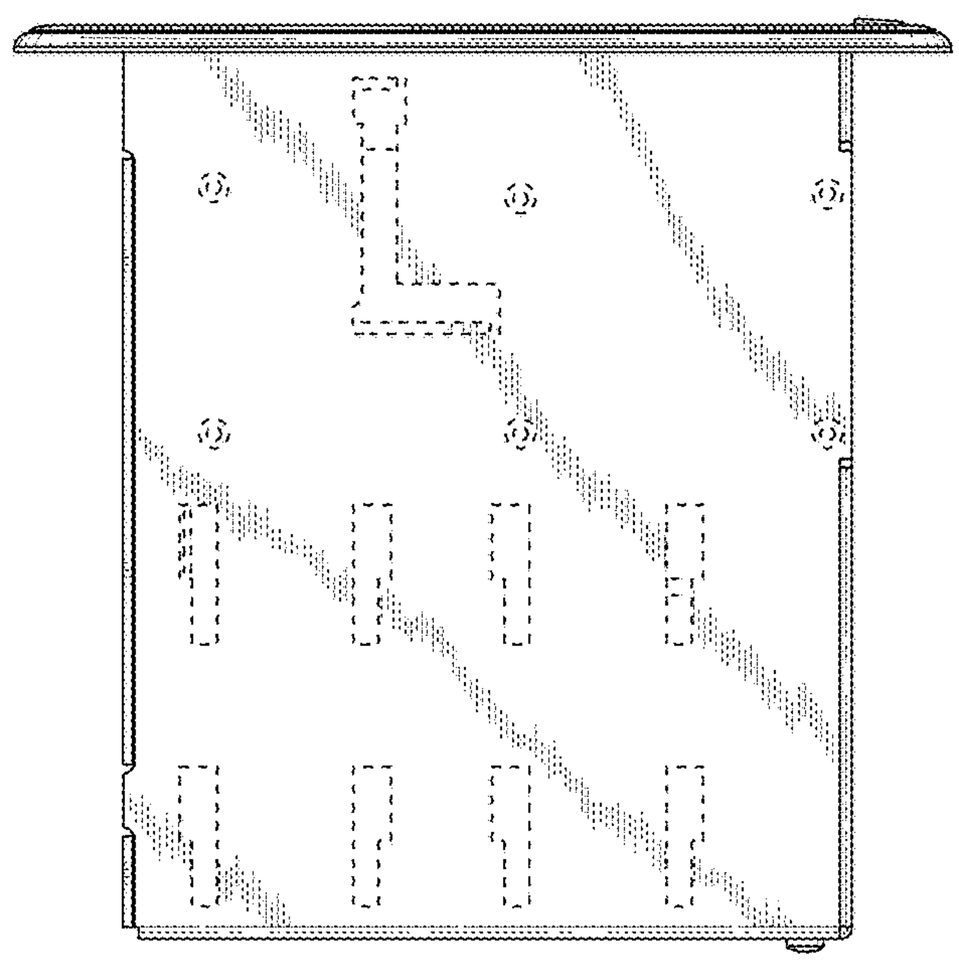

FIG. 3

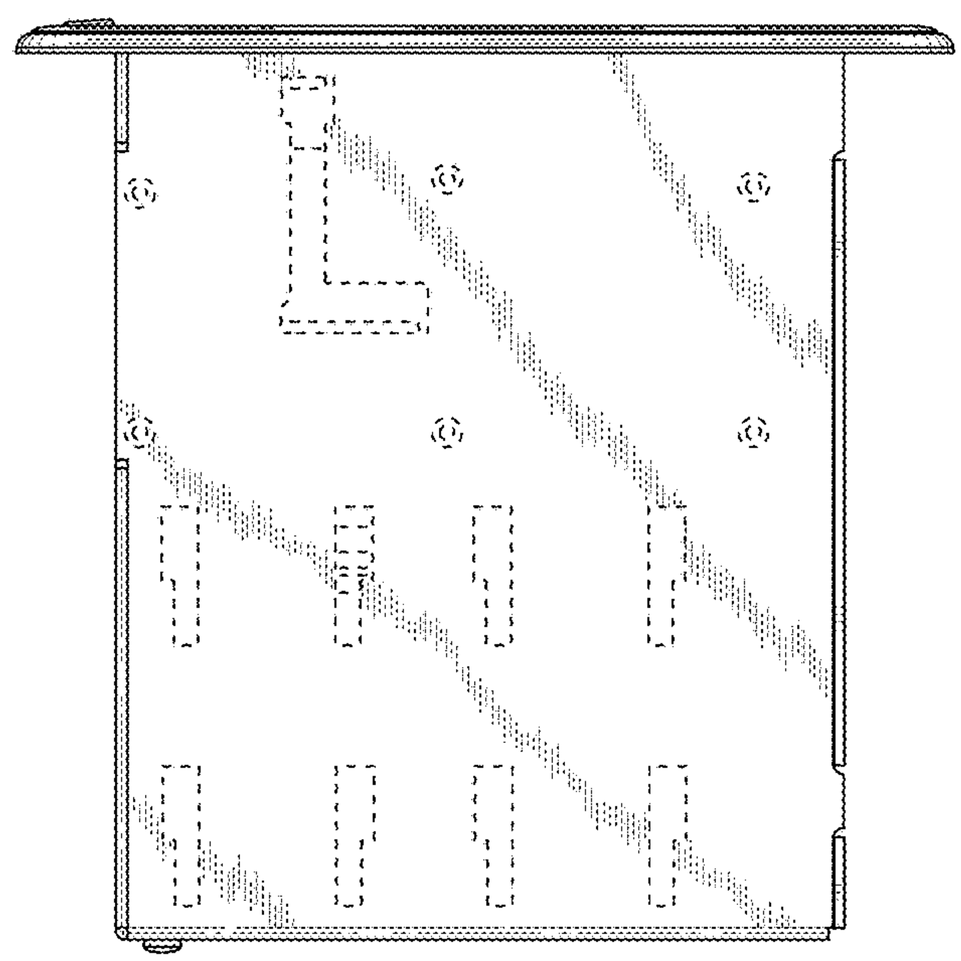

FIG. 4

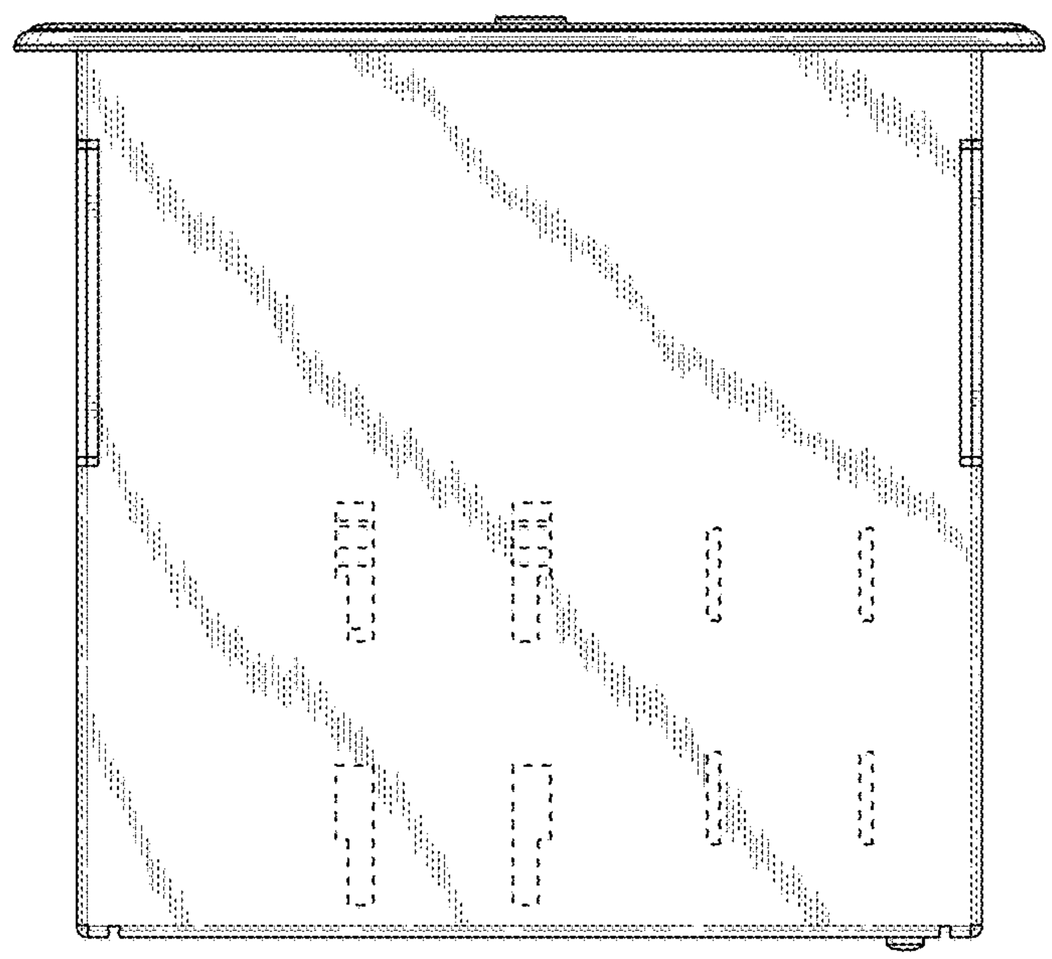

FIG. 5

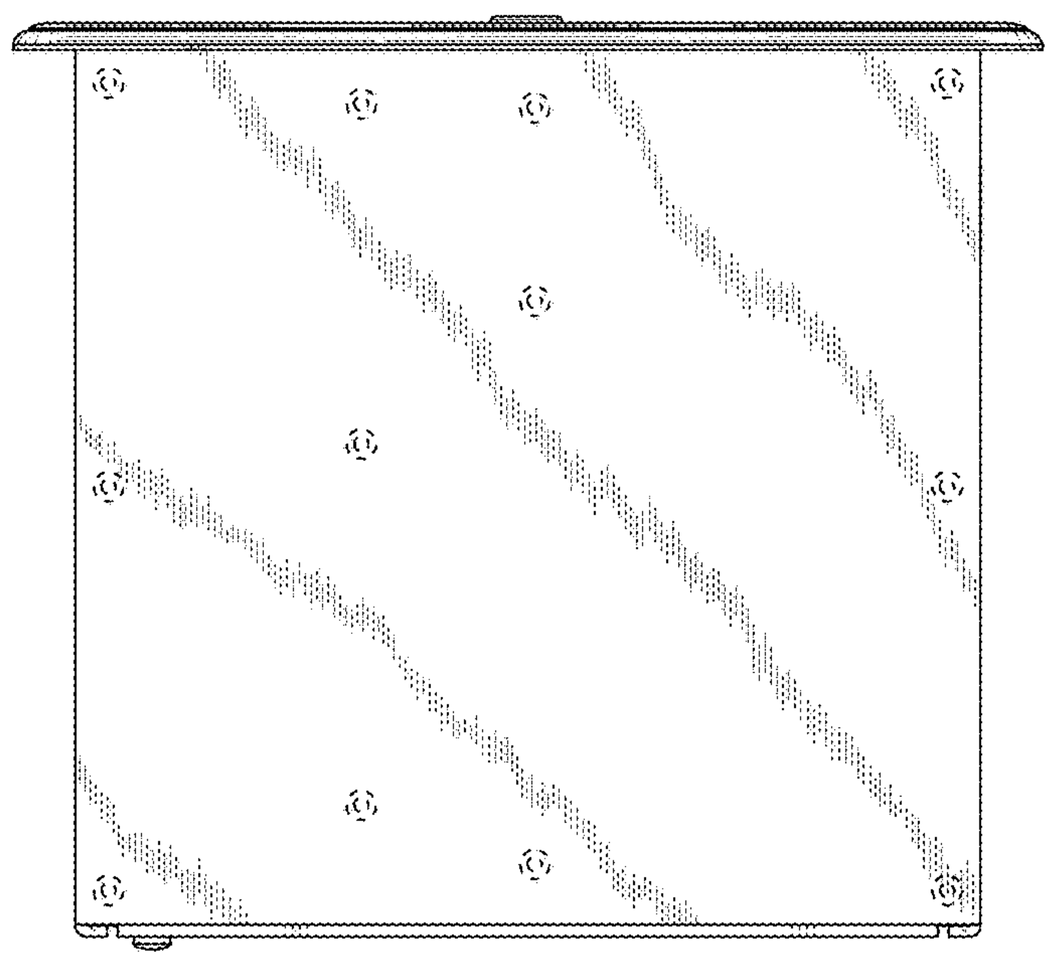

FIG. 6

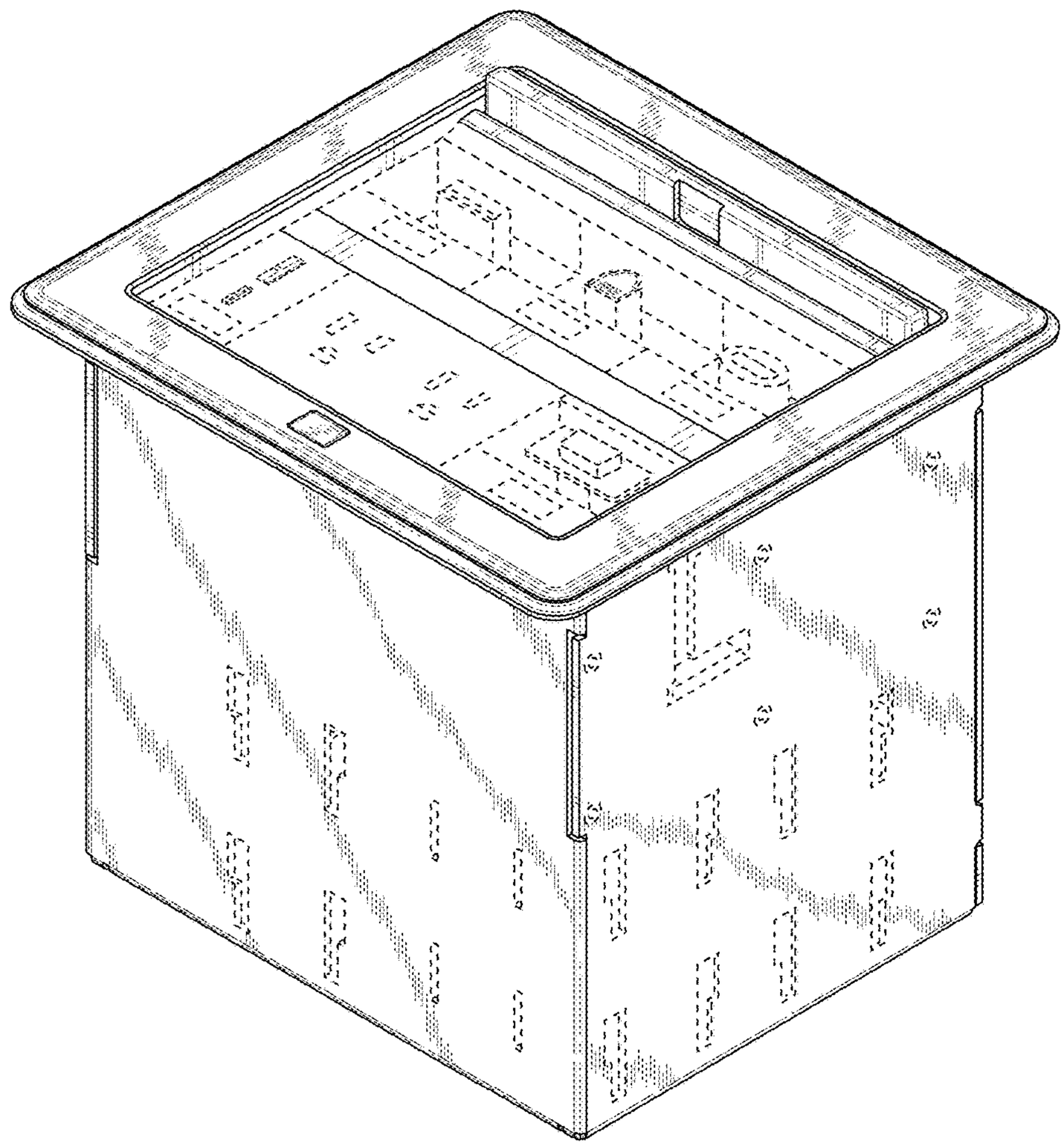

FIG. 7

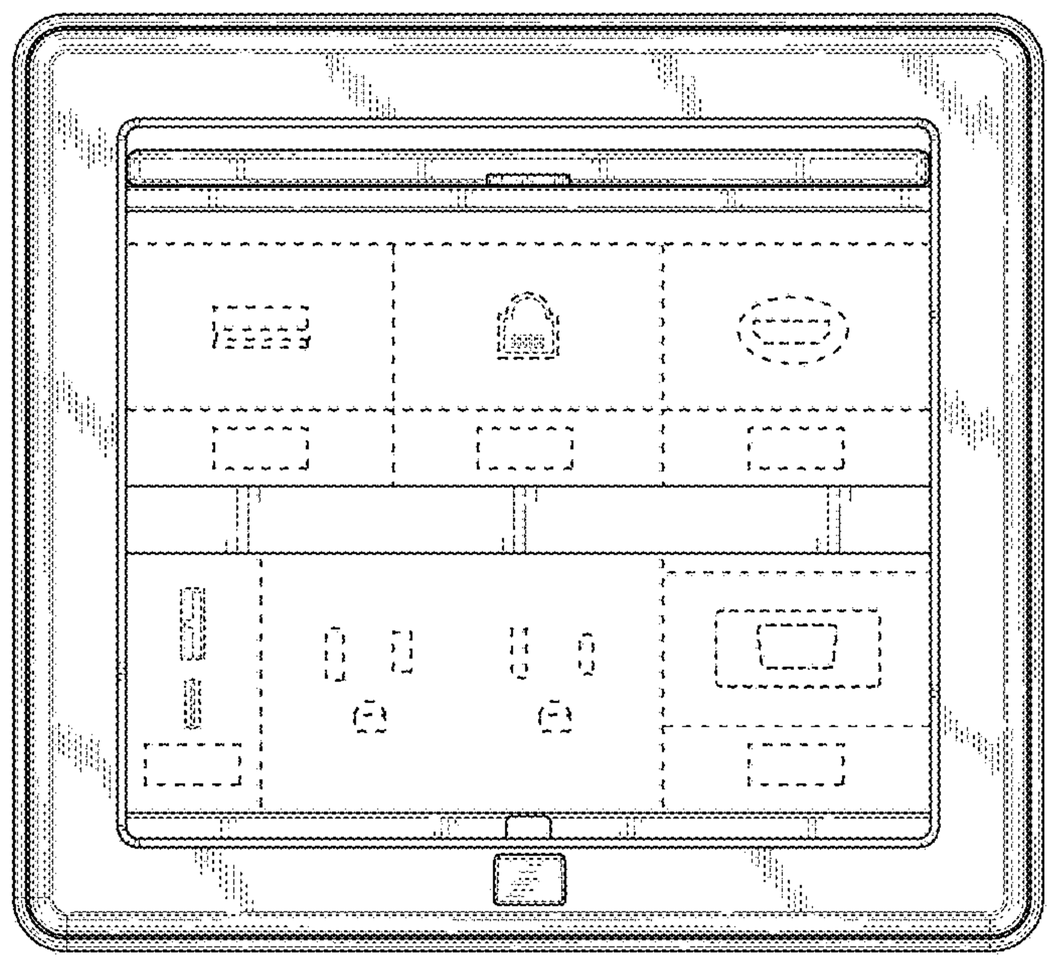

FIG. 8

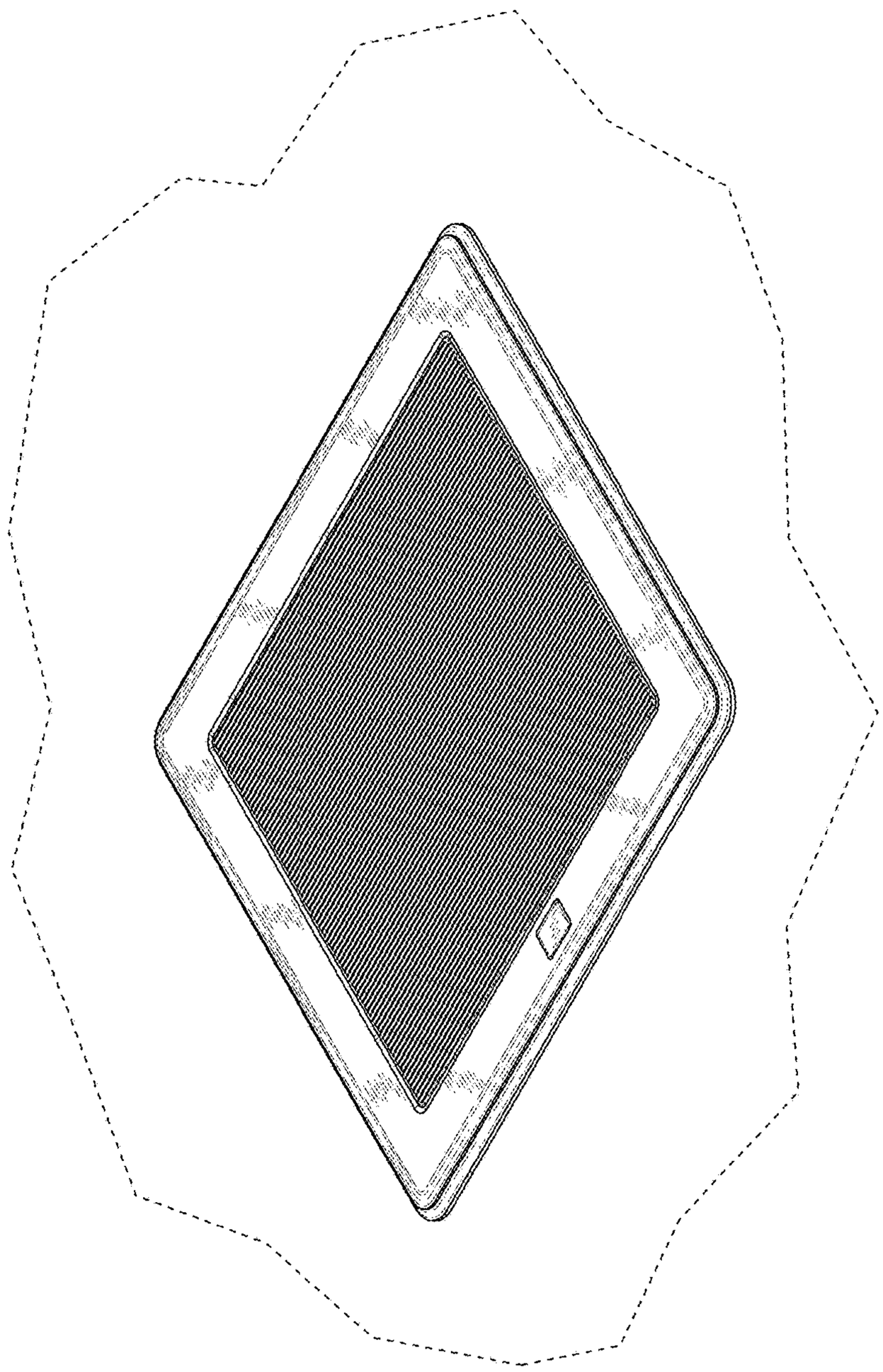

FIG. 9

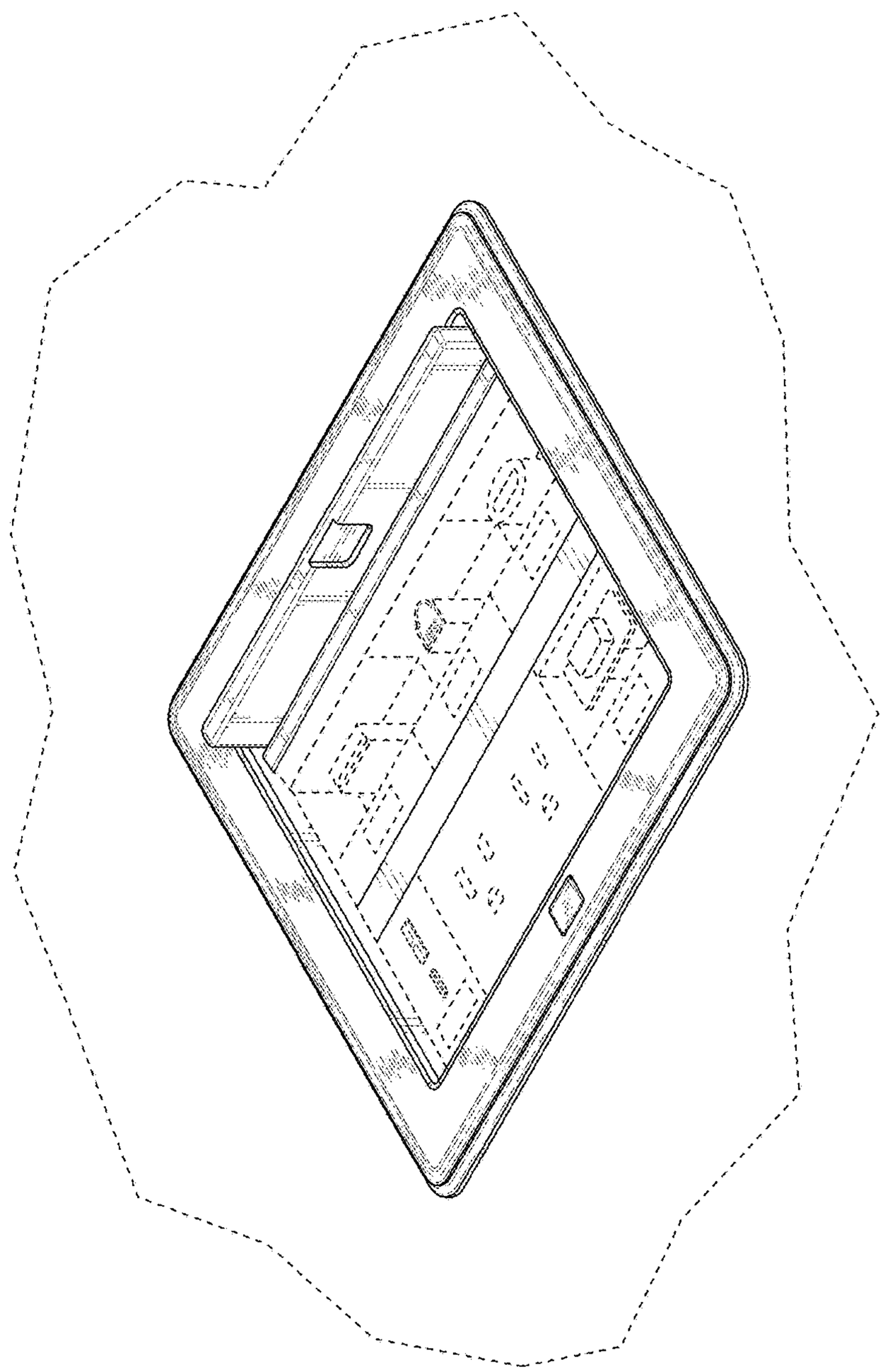

FIG. 10

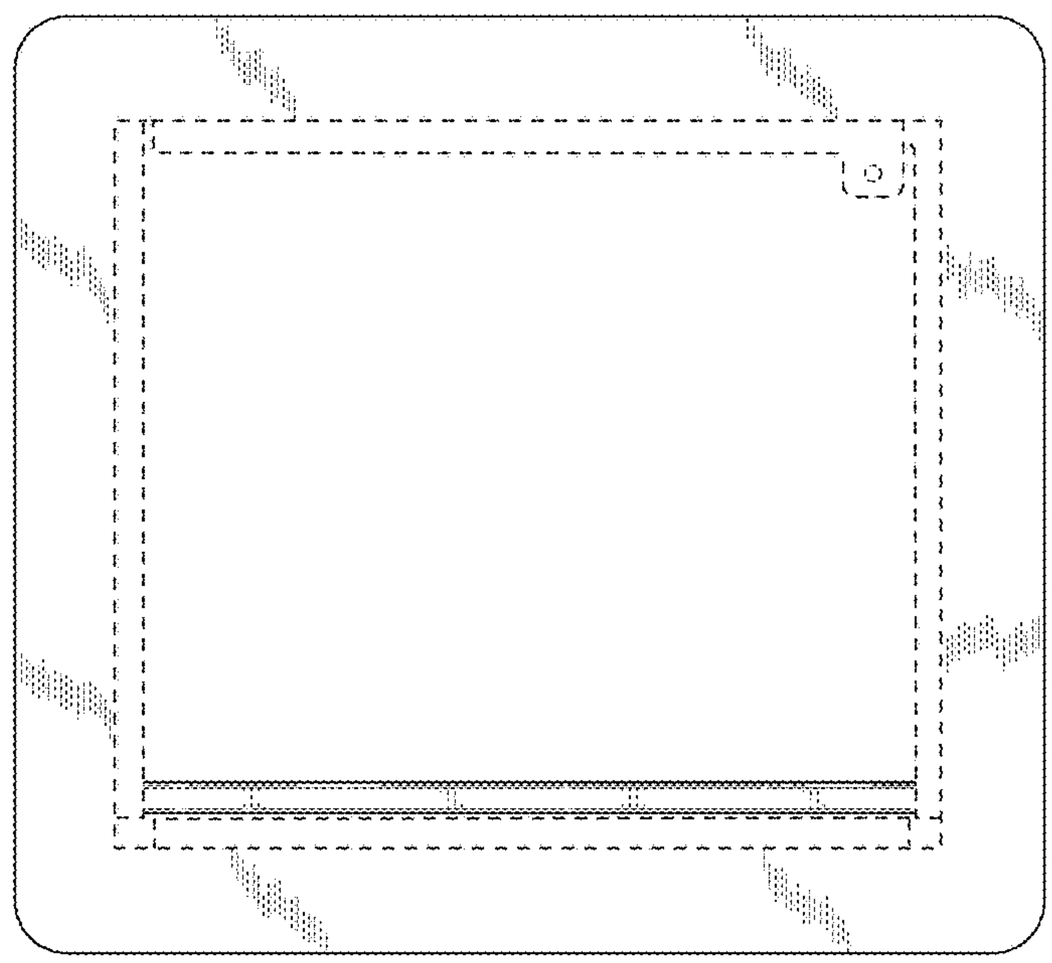

FIG. 11